ROVERS
OF THE SOLAR SYSTEM

FROM THE LROC TEAM

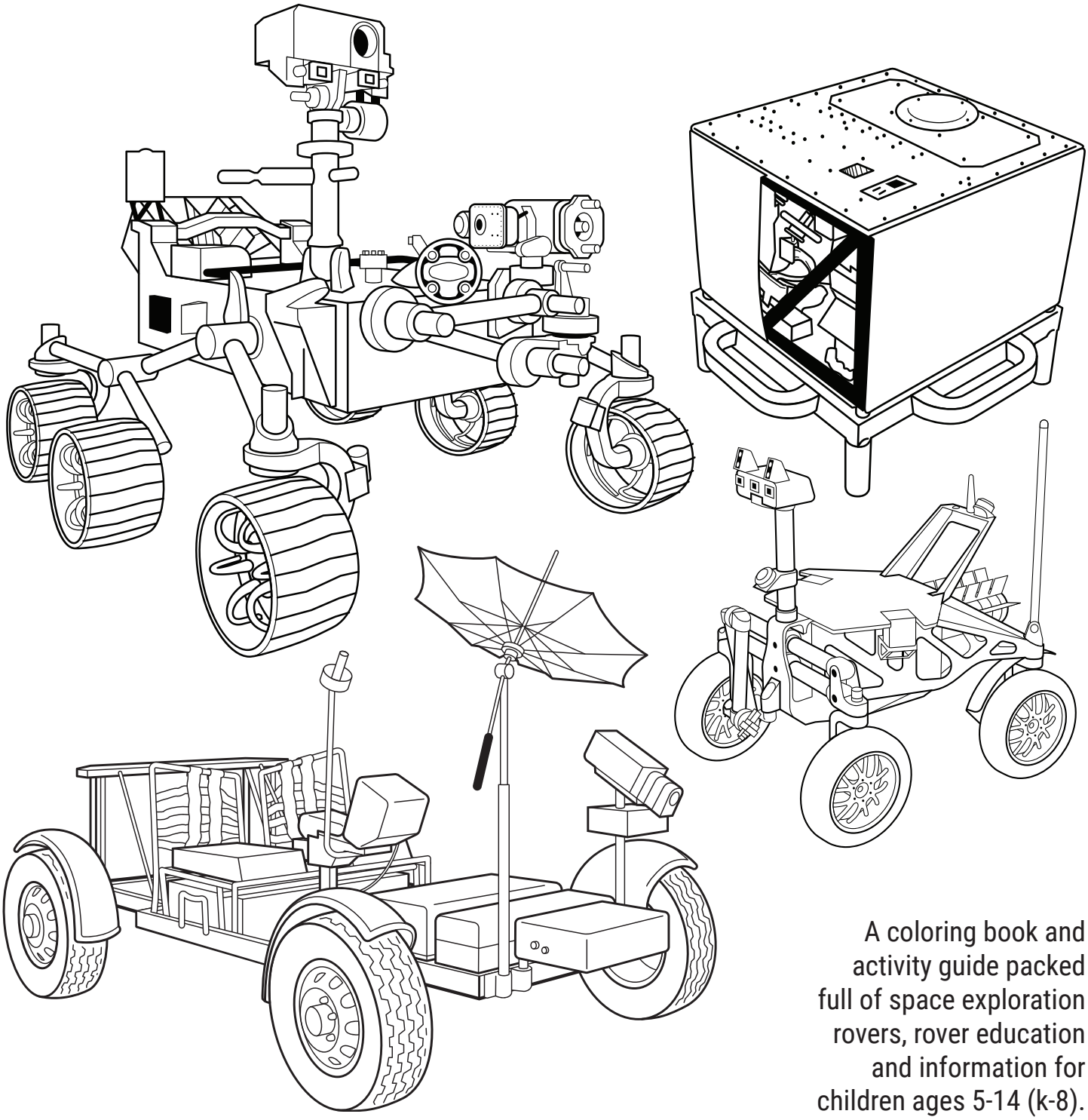

A coloring book and activity guide packed full of space exploration rovers, rover education and information for children ages 5-14 (k-8).

This booklet was produced by the
Lunar Reconnaissance Orbiter Camera
Science Operations Center team
with special credit to ASU, NASA, GSFC, JPL.

November 12, 2020

Rovers are amazing developments in space exploration and science that have been utilized to help humans reach beyond our own grasp and discover more about exciting new places. Whether they roll, crawl, or hop, rovers help us learn more about planets, moons, or asteroids all over the solar system. Rovers can carry astronauts across great distances, explore and collect data remotely, and traverse unknown obstacles autonomously.

Arizona State University has been a proud contributor to many space science missions involving rovers like Pathfinder, Spirit, Opportunity, Curiosity, Perseverance, and Intrepid.

The rovers in this booklet are presented in chronological order from the earliest launched rovers in the 1960s to more recent rovers still in development today. Rover activities can be found in the back of the book and have been included to help inspire learning, teaching, and developing creative minds and future explorers.

Geologic Rover (GROVER)

Crew operated

USGS Astrogeology building, Flagstaff, Arizona

Grover was created by the United States Geological Survey (USGS) Astrogeology Research Program in 1971 to help train Apollo 15-17 astronauts to drive a rover on the lunar surface. Astronauts trained at the Cinder Lakes training ground near Flagstaff, Arizona, in California's Mojave Desert, and in the Rio Grande gorge near Taos, New Mexico; areas on Earth that closely resembled areas on the Moon. This rover training vehicle is currently on display at the USGS Astrogeology building in Flagstaff, Arizona.

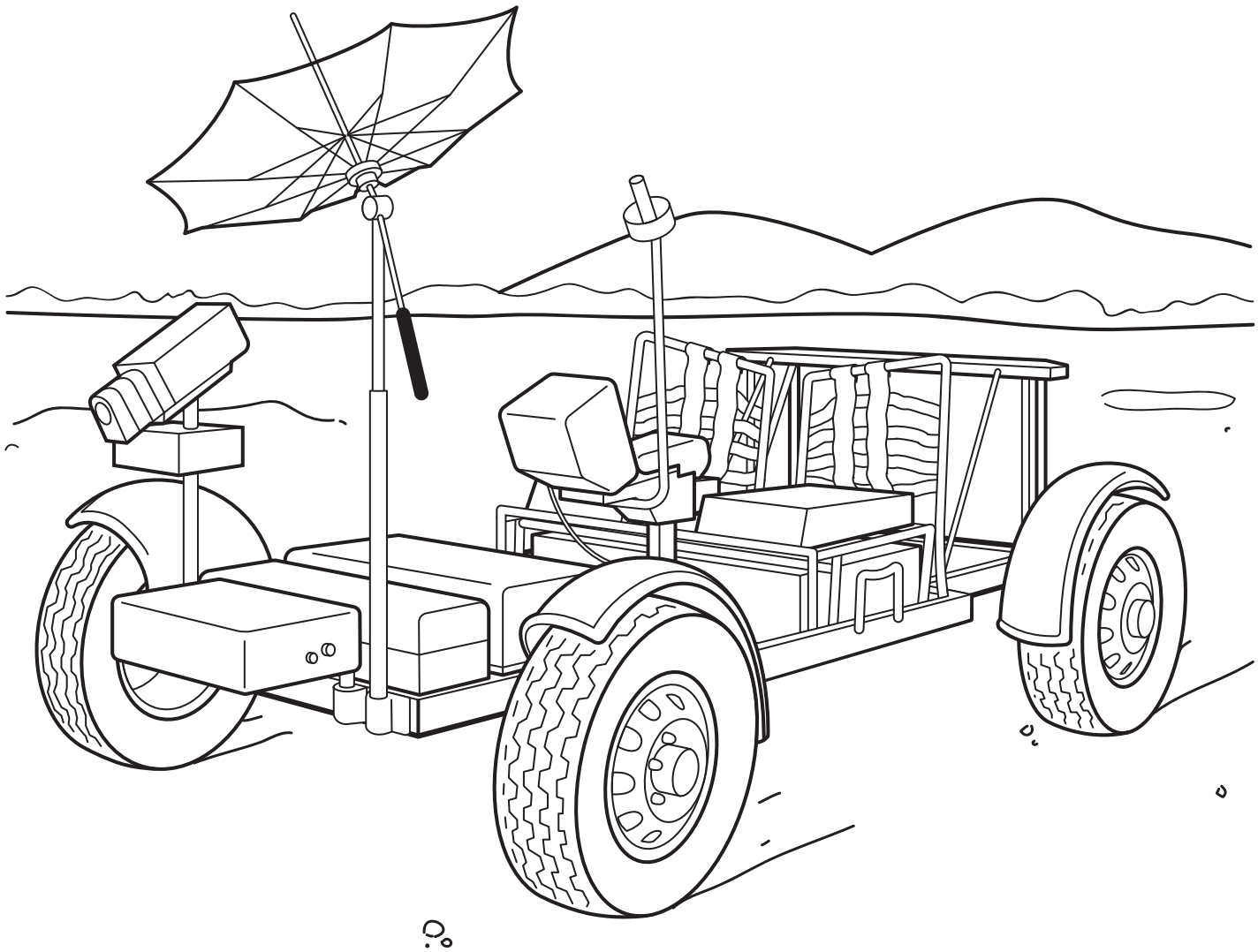

Apollo Lunar Roving Vehicle (LRV)

Crew operated

Hadley Rille (15), Descartes Highlands (16), Taurus-Littrow valley (17), the Moon

The Apollo LRVs, or Moon buggies, were brought to the Moon during the Apollo 15, 16, and 17 missions to transport astronauts, tools, scientific equipment, communications gear, and lunar samples across large distances, allowing the crew to explore more of the Moon than on previous missions. The LRV could operate for up to 78 hours and travel up to 65 km (40 mi) during the lunar day. The rover is 3.1 meters long (10 ft), 2.3 meters wide (7.5 ft), and 1.14 meters tall (3.75 ft), and was capable of carrying more than twice its own weight, or 490 kg (1080 lbs).

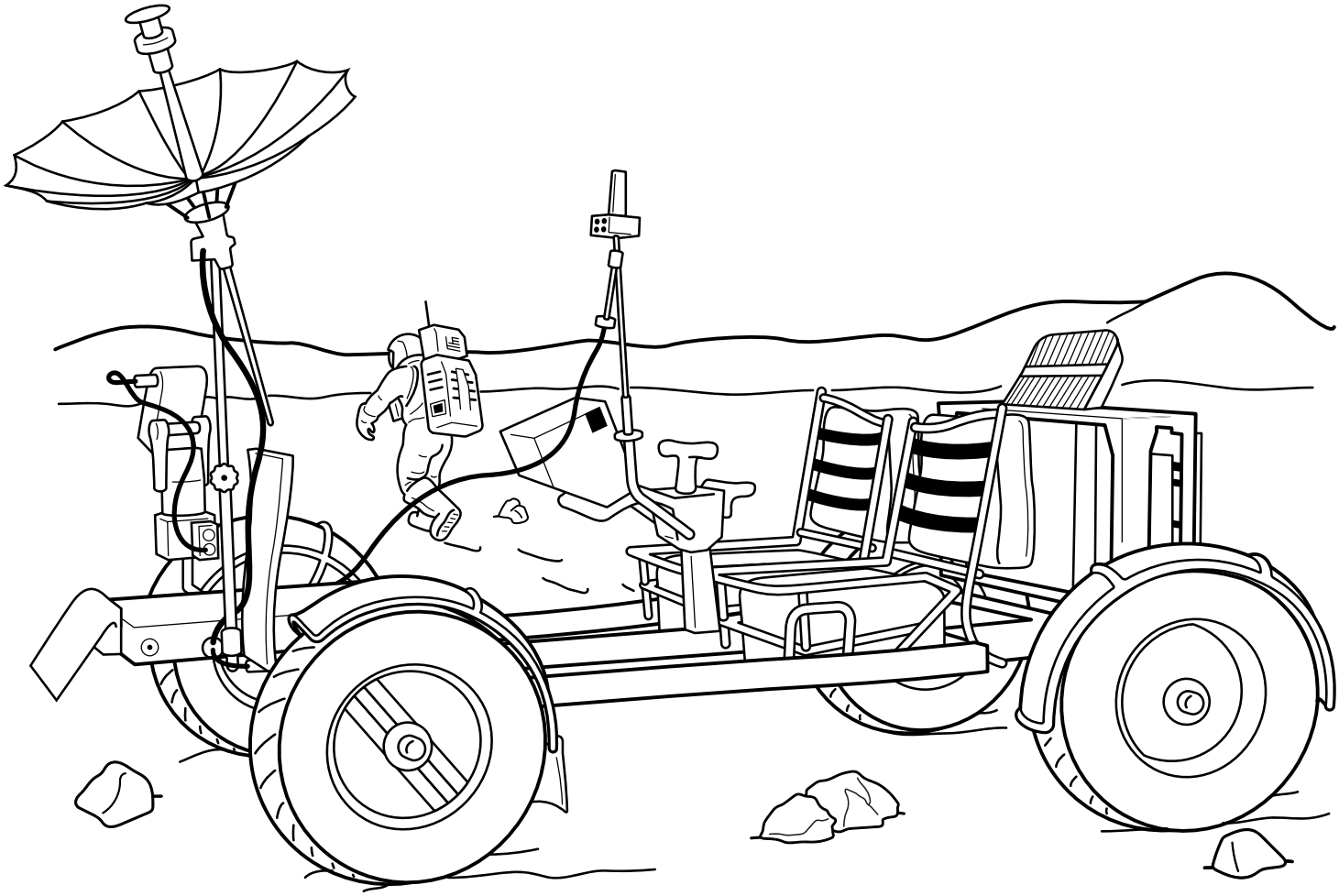

Lunokhod 1 & 2 (Луноход)

Remotely operated

Mare Imbrium (Lunokhod 1) and Mare Serenitatis (Lunokhod 2), the Moon

The Lunokhod (Moonwalker) rovers were launched by the Soviet Union and were the first robotic rovers landed on the Moon. They were designed to support the planned Soviet crewed lunar missions prior to the missions being canceled after the success of the Apollo missions. Both rovers were instead used for remote exploration, returning images of the lunar surface. Lunokhod 1 explored a total of 10.5 km (6.5 mi), and Lunokhod 2 explored a total of 39 km (24 mi) on the lunar surface.

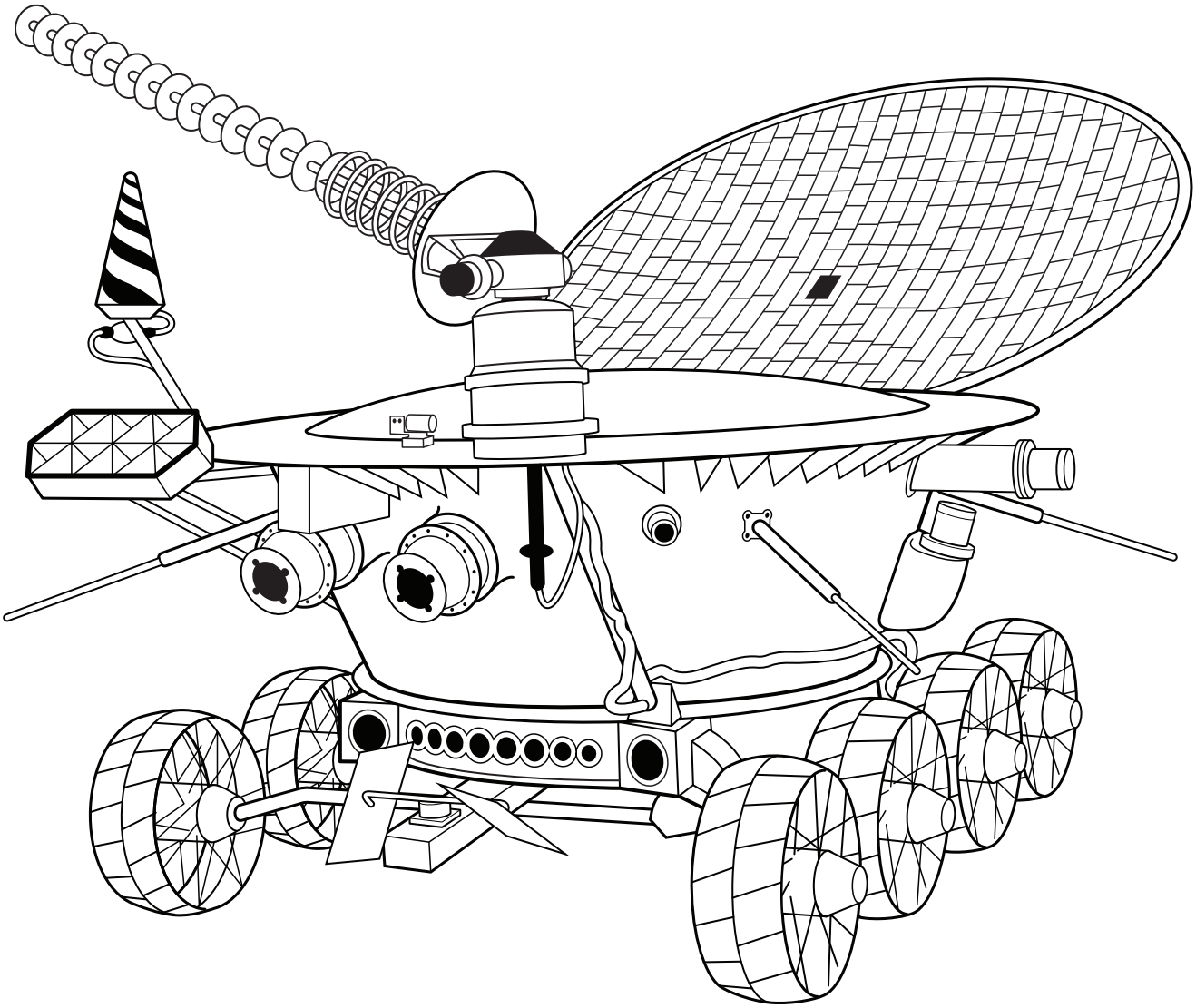

Prop-M Rover

Autonomously operated

Hellas Chaos (Mars 2) and Terra Sirenum (Mars 3), Mars

The Prop-M rovers were launched in 1971 as part of the Mars 2 & 3 missions under the Soviet Union's Mars program. The rover on Mars 2 failed to land, and the Mars 3 lander lost communication right after landing in Terra Sirenum. Both rovers were designed to be connected to the Mars lander with a 15 m (49 ft) cable and once deployed, they would move along the Martian surface using skis attached to either side of the main body, shuffling them back and forth like a cross-country skier might do in the snowy Soviet winters.

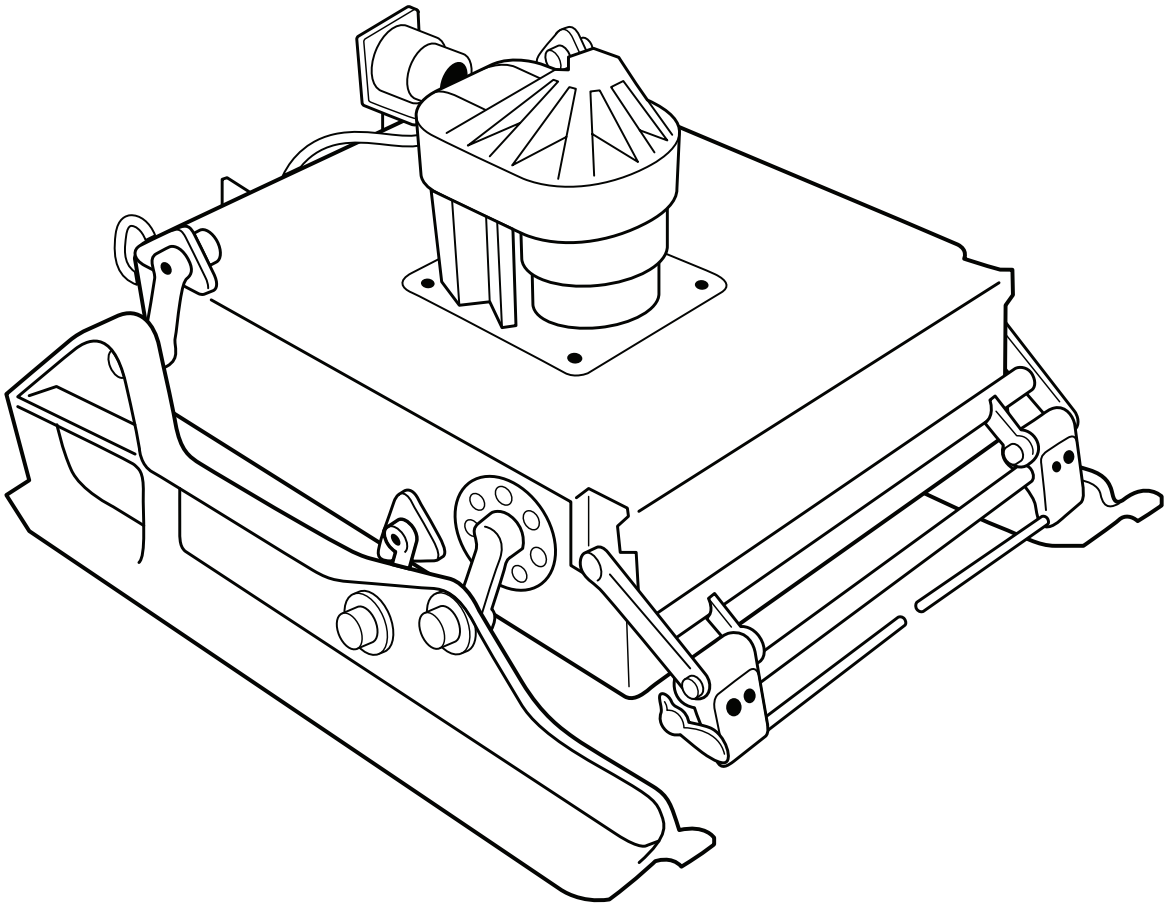

Sojourner

Autonomously operated
Ares Vallis, Mars

Part of NASA's Mars Pathfinder mission launched in 1996, the Sojourner rover was the first wheeled vehicle to explore another planet. The Pathfinder mission was designed to demonstrate a low-cost method of delivering scientific instruments to Mars. The three wind socks that made up the Wind Sock Experiment on-board the Mars Pathfinder were manufactured at the ASU Physics Machine Shop. Sojourner successfully landed and operated on Mars for three months (83 days), and it served as a foundation for future Mars rovers like Spirit, Opportunity, and Curiosity.

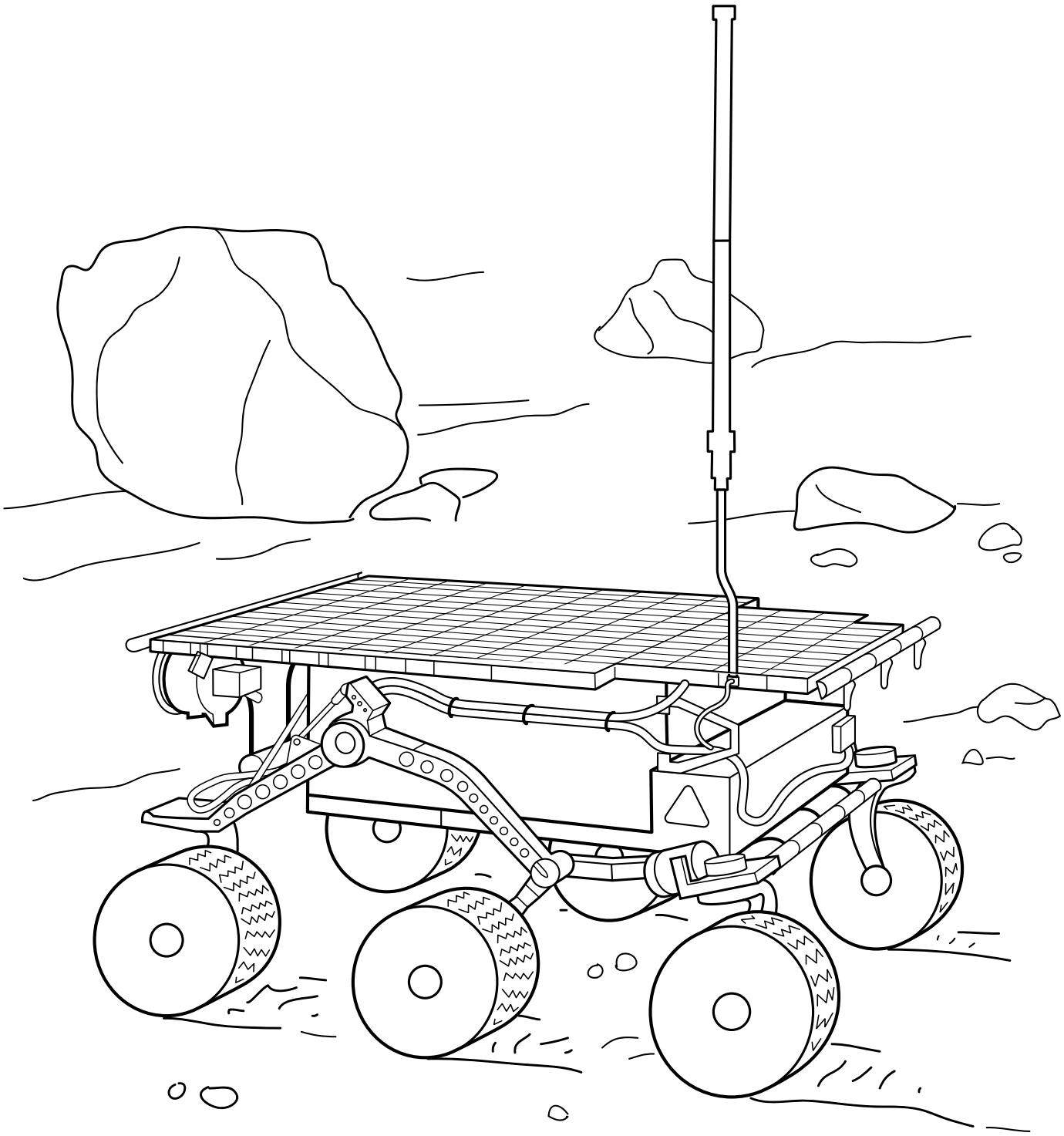

Mars Exploration Rovers (Spirit & Opportunity)

Autonomously operated

Gusev Crater (Spirit) and Meridiani Planum (Opportunity), Mars

Spirit and Opportunity were twin rovers that launched in 2003 and landed in different locations on Mars in 2004. Spirit landed first followed closely by Opportunity. Both rovers successfully completed and far exceeded their primary science mission of 90 days exploring Mars. Spirit's mission ended in 2010, and Opportunity went on for almost 15 years until 2019. Important discoveries by these two rovers included finding signs of liquid water in the past, dust storms and weather, and uncovering more about the history of Mars by investigating its rocks (geology). Both rovers were equipped with Miniature Thermal Emission Spectrometers (Mini-TES) instruments that were designed and opperated by scientists at Arizona State University's Mars Space Flight Facility.

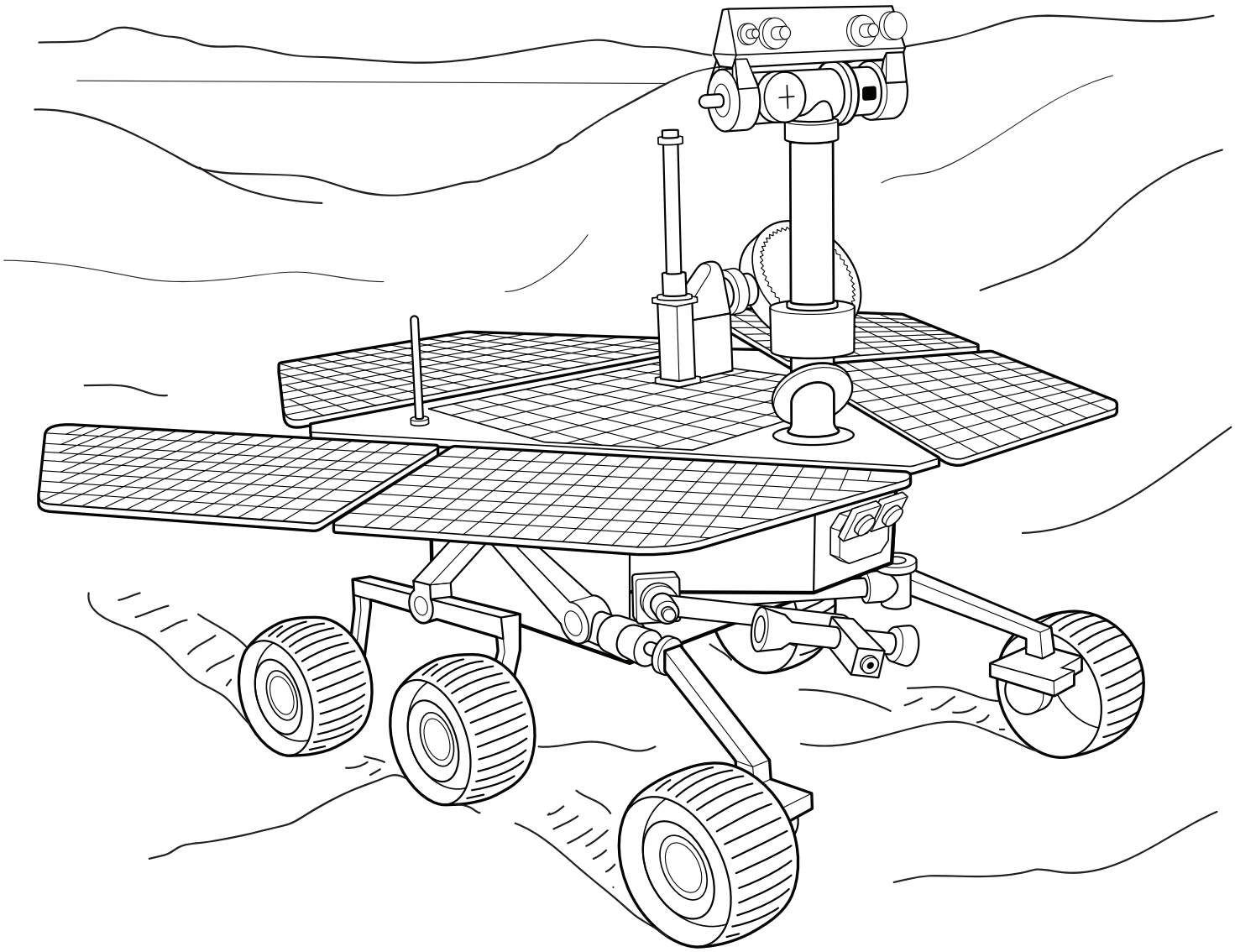

Lunar Exploration Rover (Space Exploration Vehicle)

Crew operated

Johnson Space Center, Houston, Texas

NASA's Lunar Exploration Rover (LER) unveiled in 2007 was a prototype for future lunar exploration missions. The rover was designed in two sections, the chassis and the cabin. The chassis could carry a payload of up to 3000 kg, or 1000 kg with the cabin attached. The LER's pressurized cabin houses two astronauts for up to 14 days and is about the size of a pickup truck that can climb slopes of up to 40°. The design has since evolved into the Space Exploration Vehicle (SEV), which can use the same cabin on the Moon, Mars, or asteroids.

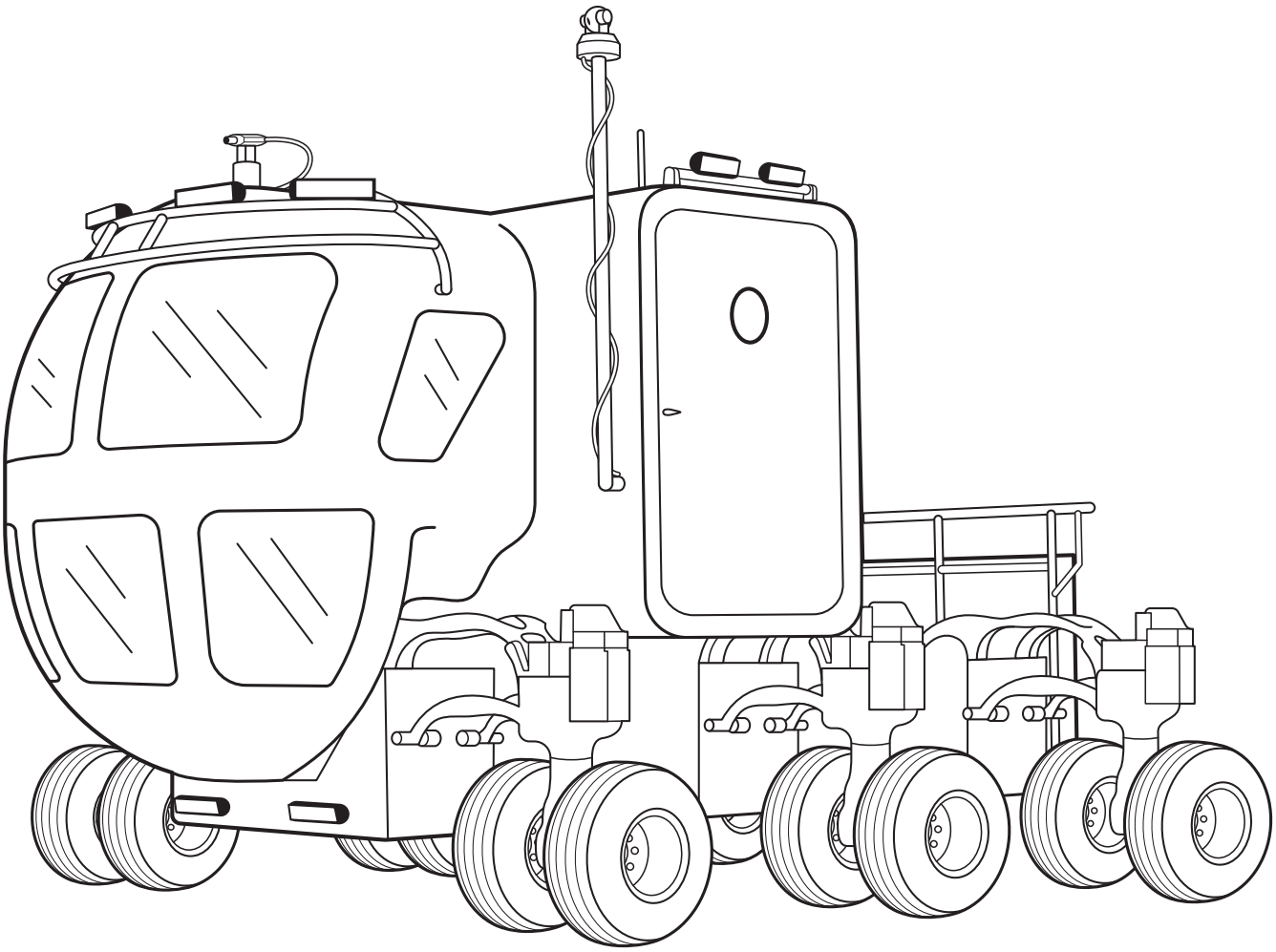

Mars Curiosity Rover

Autonomously operated

Gale crater, Mars

Curiosity is roughly the size of a small SUV. It was sent to Gale Crater on Mars by NASA to help discover if Mars ever had the right conditions to support small life forms. Unlike many rovers, Curiosity is powered by a radioisotope thermoelectric generator (RTG). Curiosity landed on the martian surface in 2012 and is the largest, most capable rover ever sent to Mars, discovering the evidence it was searching for early on in its mission. Several ASU professors along with many staff and students played key roles in processing data sent back from and instrumentation onboard Curiosity: the Sample Analysis at Mars (SAM) instrument, CheMin, the Russian Dynamic Albedo of Neutrons instrument, Mars Hand Lens Imager (MAHLI), Mars Descent Imager (MARDI) and MastCam. Curiosity continues to explore Mars today, searching for more answers to help solve the mysteries of Mars.

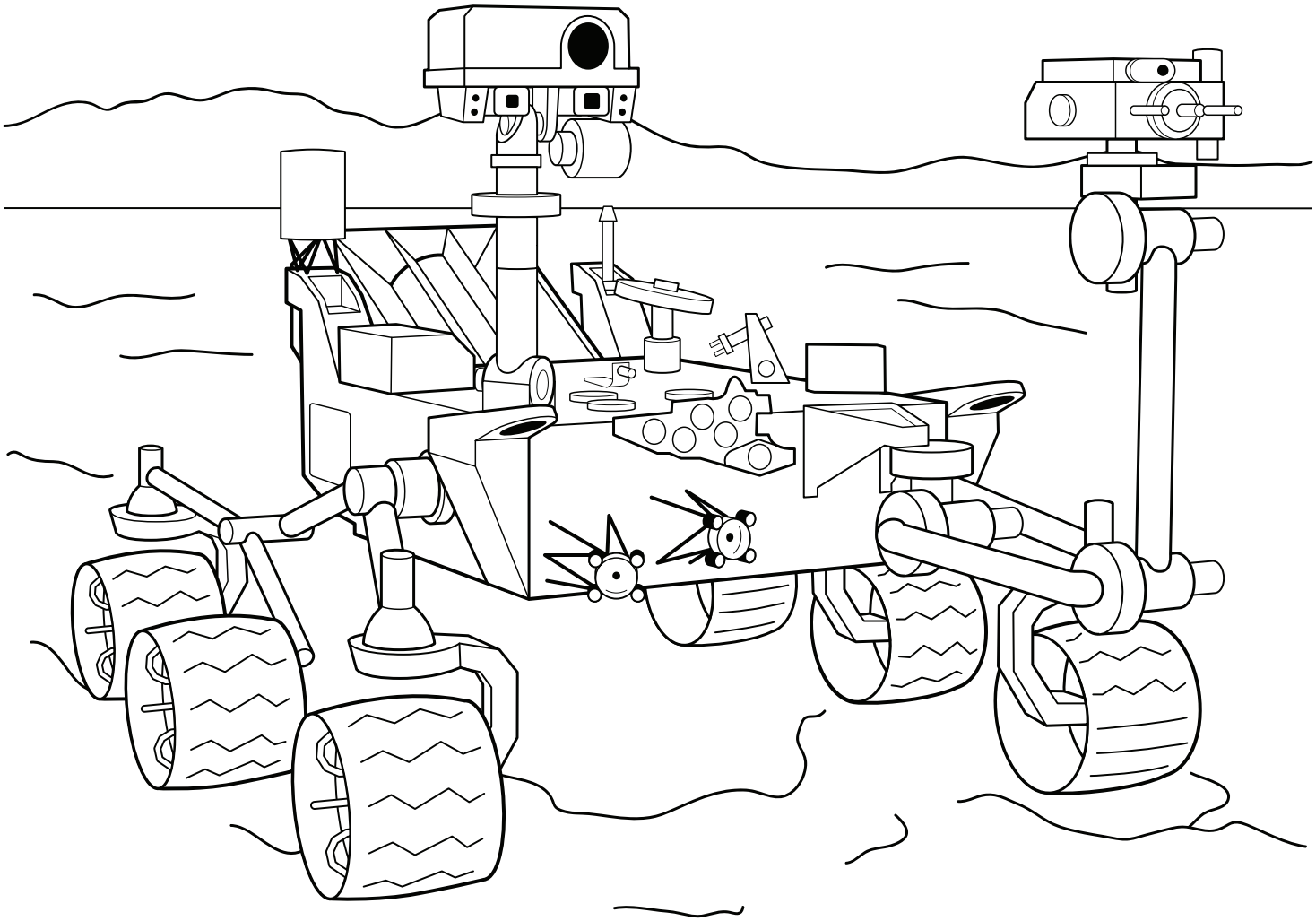

Yutu & Yutu 2 (玉兔)

Remotely operated

Mare Imbrium (Yutu) and Von Kármán crater (Yutu 2), The Moon

Yutu (Jade Rabbit) and Yutu 2 are relatively small, 1.5 m (4.9 ft) tall rovers that landed on the lunar surface as part of China's Chang'e 3 & 4 missions. Chang'e 3 landed and deployed Yutu at the Moon's Mare Imbrium (Sea of Rains) in 2013. Chang'e 4 landed and deployed Yutu 2 at Von Kármán crater in 2019. Yutu is named after the pet rabbit of Chang'e, the Chinese goddess of the Moon. The objectives of the Chinese Lunar Exploration Program that launched the Chang'e missions is to help pave the way for future human exploration missions.

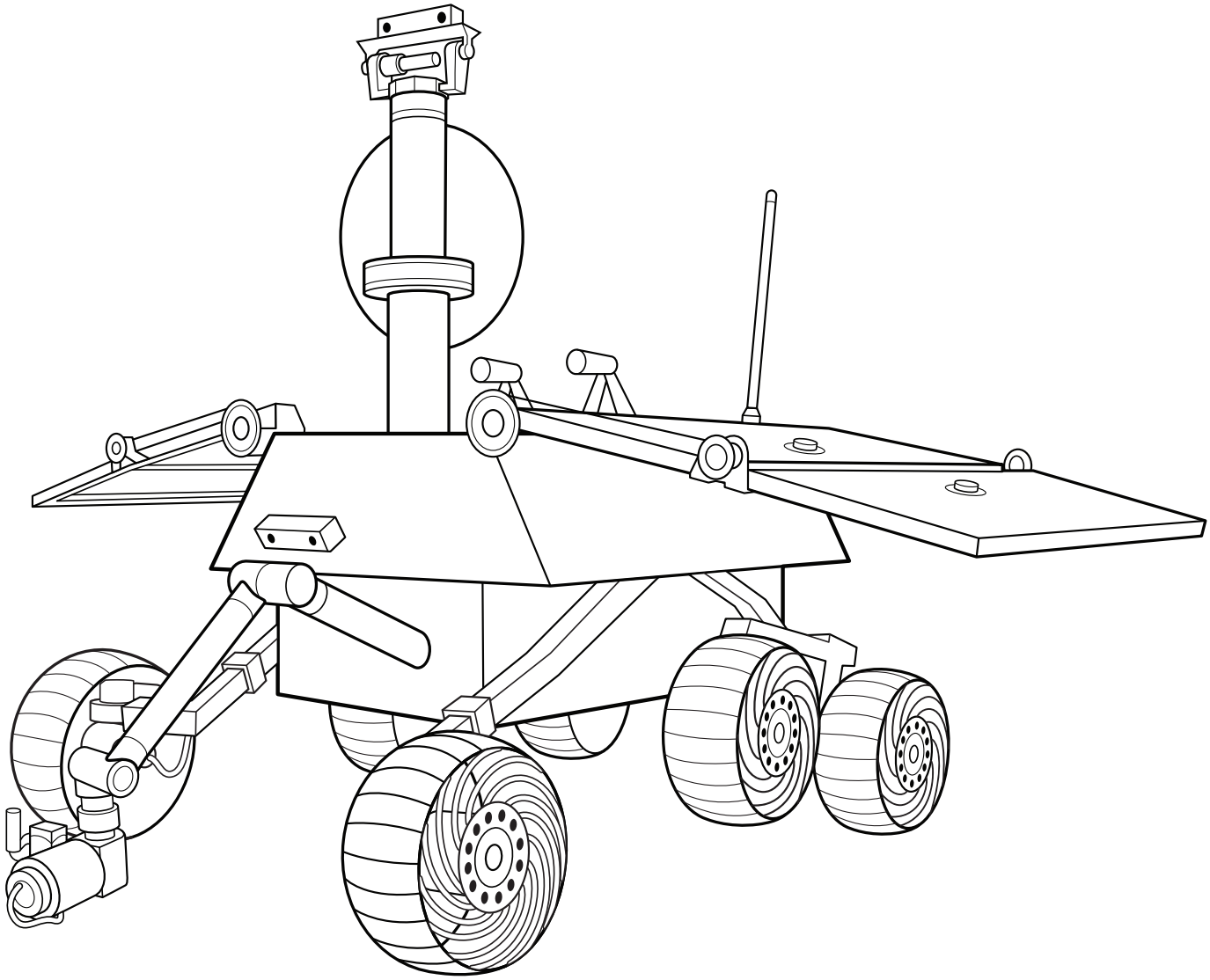

Mars Rover Vehicle Navigator (MRVN)

Crew operated

Kennedy Space Center, Merritt Island, Florida

Approved by NASA and commissioned by the Kennedy Center Visitor Complex, the Mars Rover Vehicle Navigator (MRVN) is a concept vehicle to help imagine what future Mars exploration might look like. The rover separates in the middle with the front area designed for scouting and the back section serves as a full laboratory which can disconnect for autonomous research. The rover can be seen at the Kennedy Space Center Visitor Complex in Florida.

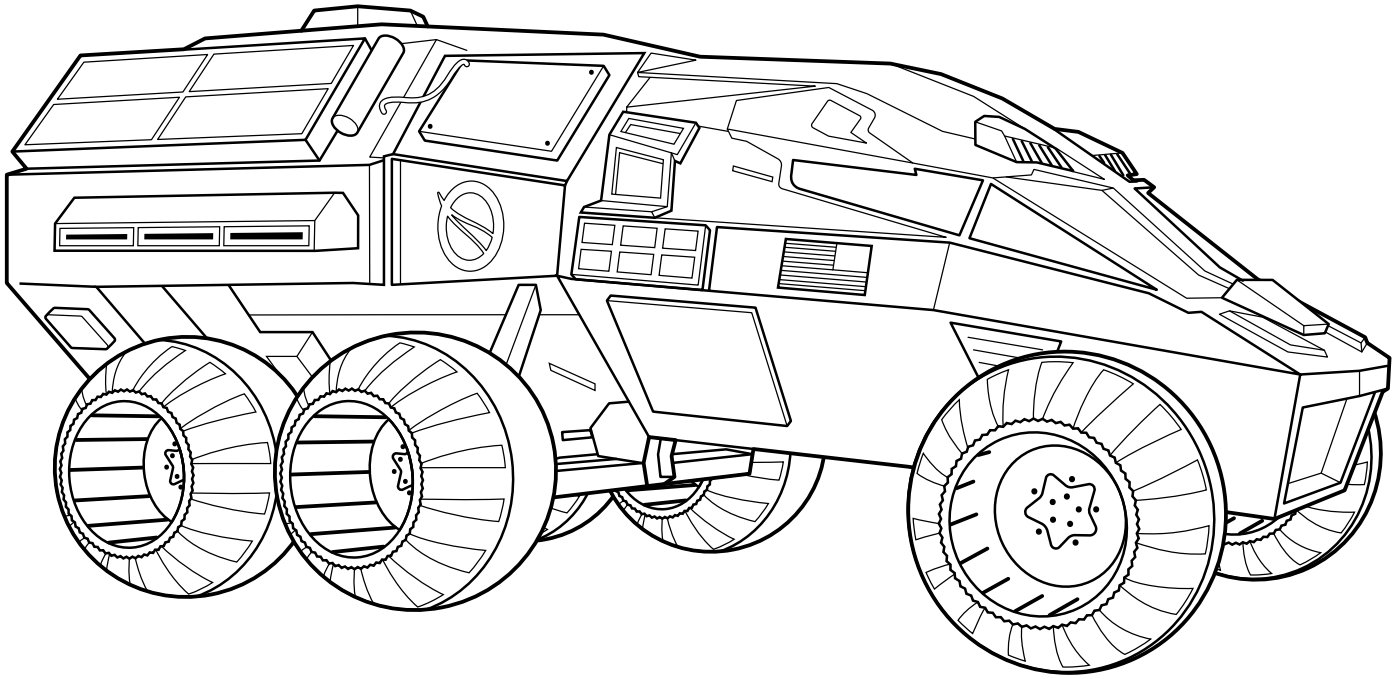

Pragyan (प्रज्ञान)

Remotely operated

A highland between Manzius C and Simpelius N craters near the lunar south pole

Pragyan, which translates to 'wisdom' in Sanskrit, was part of the Indian Space Research Organization's (ISRO) Chadrayaan-2 mission that launched an orbiter, lander and rover to the Moon in 2019. The Vikram lander carrying the Pragyan rover failed to achieve a soft landing on the lunar surface, but the Chandrayaan-2 Orbiter continued on a successful mission around the Moon. The loss of the Vikram lander and the Pragryan rover demonstrates the difficulties and risk involved with space exploration.

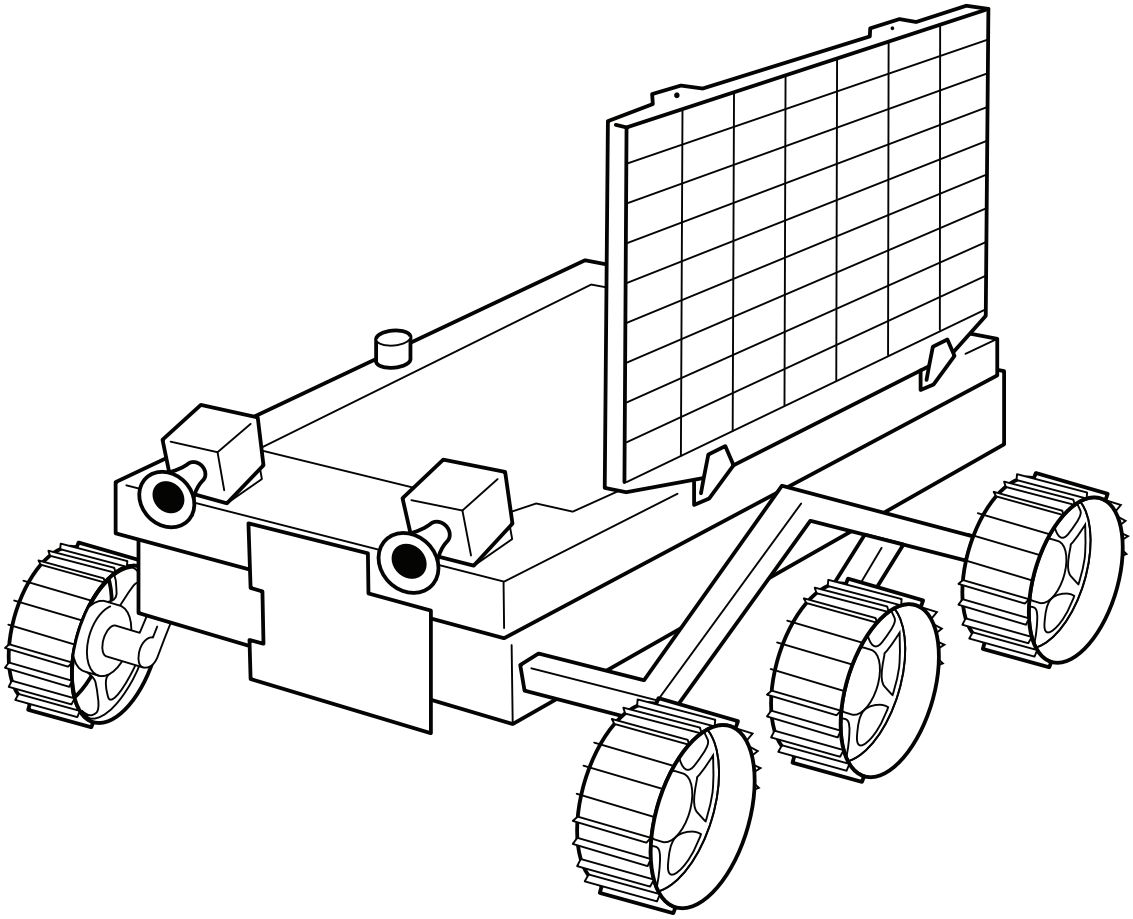

Micro-Nano Experimental Robot Vehicle for Asteroid

Autonomously operated

Asteroid Ryugu, orbiting the Sun somewhere between Earth and Mars

Micro-Nano Experimental Robot Vehicle for Asteroid (MINERVA-II) was a collection of three hopping rovers on the Hayabusa-2 mission launched in 2014 by the Japan Aerospace Exploration Agency (JAXA) to study the near-Earth asteroid Ryugu. Two of the three rovers (HIBOU & OWL) were deployed successfully, hopping along the asteroid's surface and returning data from 2018-2019. The third rover failed before deployment, but was released as an orbiter to perform gravitational measurements.

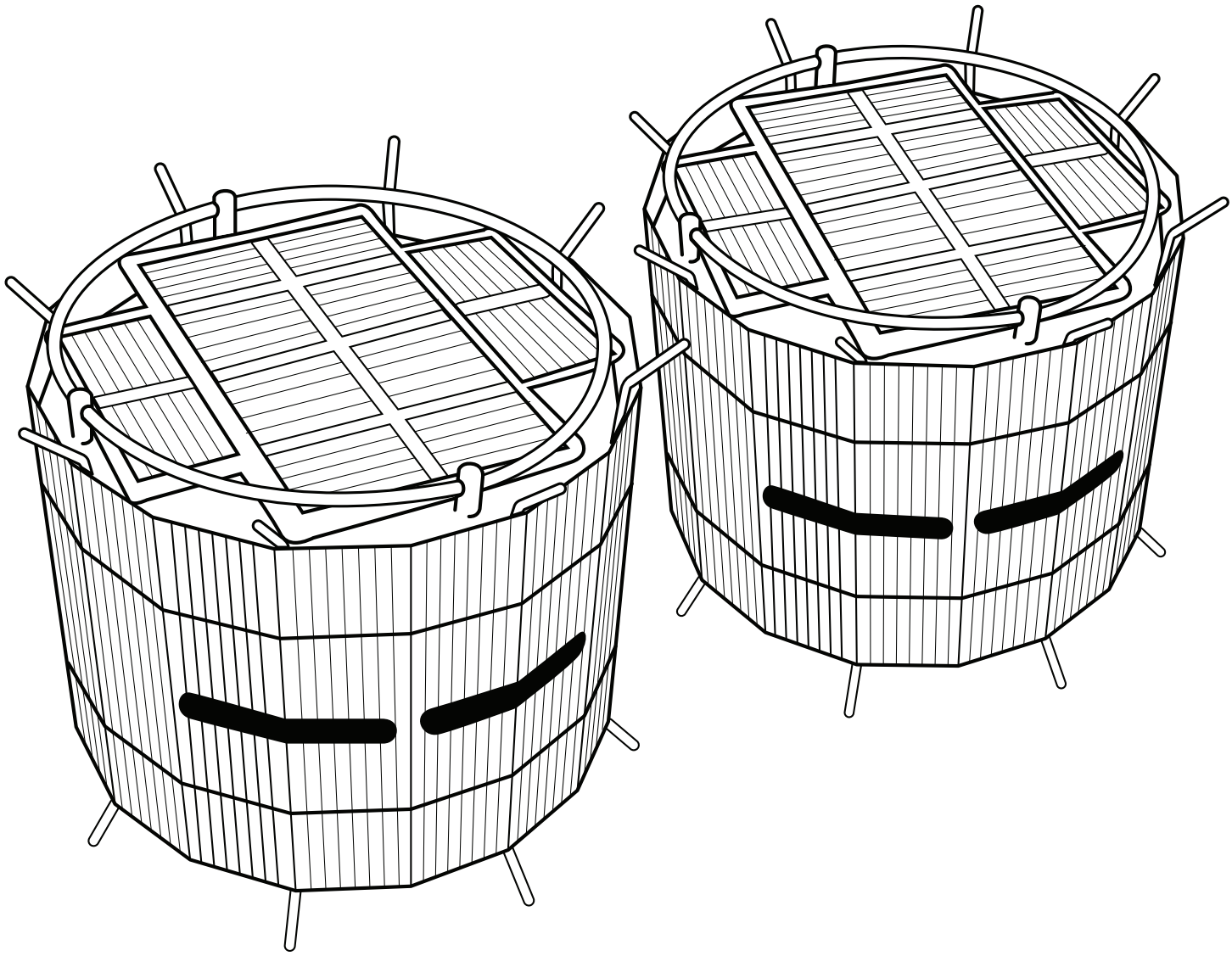

Mobile Asteroid Surface Scout (MASCOT)

Autonomously operated

Asteroid Ryugu, orbiting the Sun somewhere between Earth and Mars

Mobile Asteroid Surface Scout (MASCOT) was developed by the German Aerospace Center (DLR) and was the fourth rover on the Hayabusa-2 asteroid mission sent to near-Earth asteroid Ryugu. Like the other three MINERVA-II rovers, MASCOT was a small, hopping rover that could fit in your hands. It completed its mission to probe and photograph the surface of the asteroid, hopping across the surface and conducting research with an array of high-powered instruments for over 17 hours.

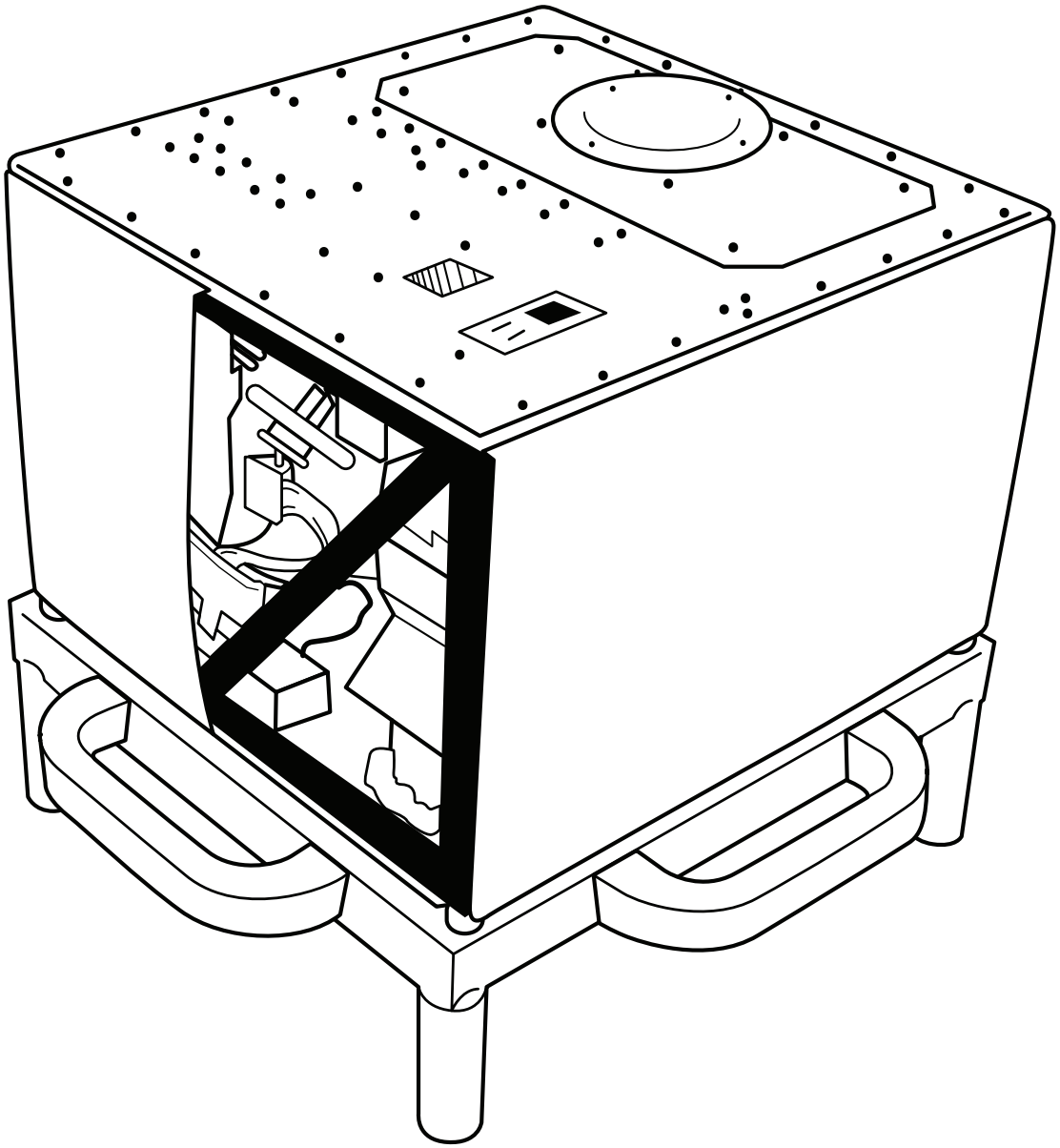

Tycho

Crew operated

Arizona State University, Tempe, Arizona

Tycho, named after a prominent lunar impact crater located in the southern lunar highlands and the Danish astronomer Tycho Brahe, is a lunar rover training vehicle prototype designed and built at Arizona State University's School of Earth and Space Exploration. Tycho is a modern interpretation of Grover, the training vehicle made by USGS to help train Apollo-era astronauts. Tycho has more maneuverability, and in later phases, it will add autonomous and remote driving capabilities.

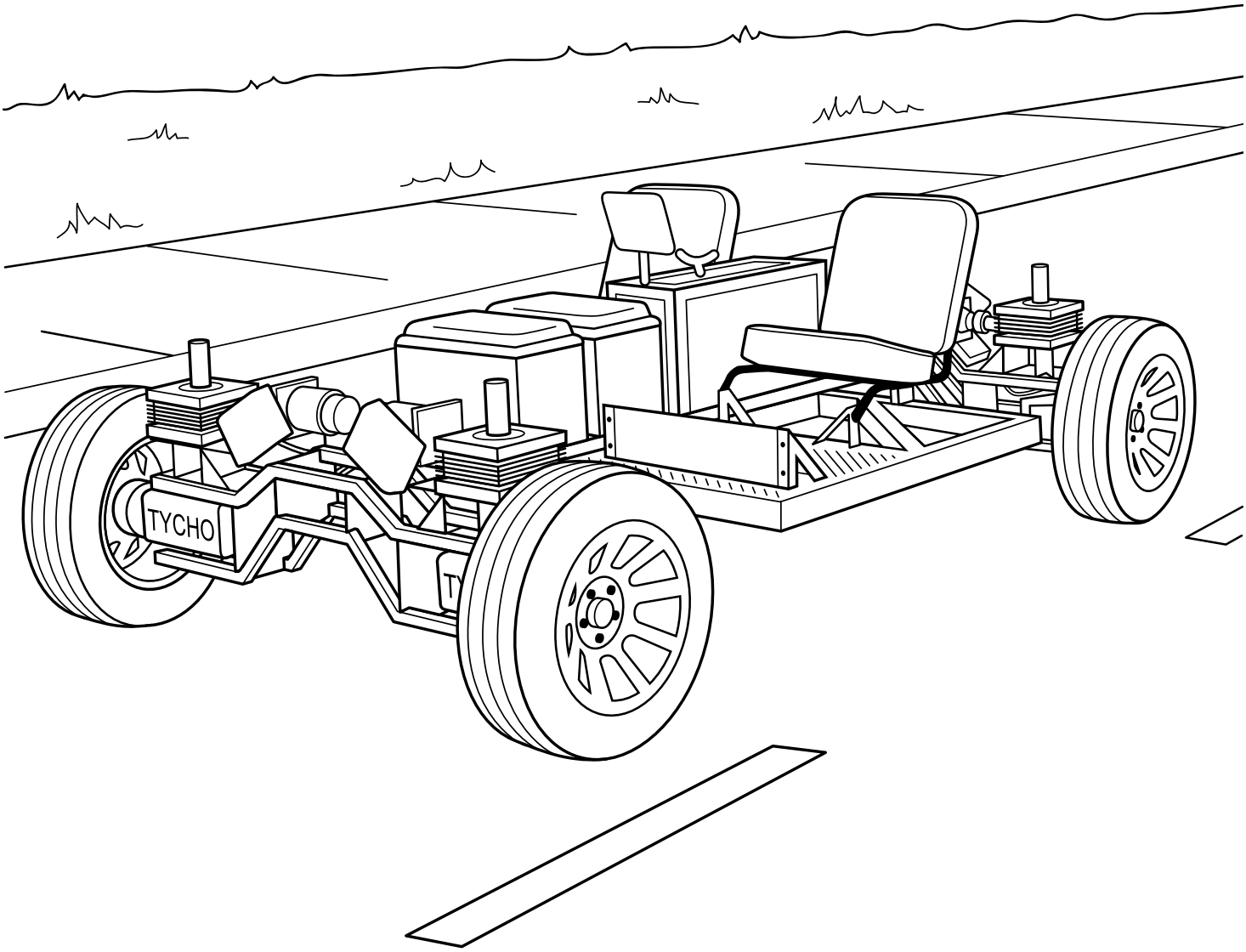

Perseverance

Autonomously operated

Planned exploration of Jezero Crater, Mars

Like Curiosity, Perseverance is roughly the size of a small SUV, but with different instruments, it's heavier, and has more cameras. It launched July 2020 and is currently en route to Jezero Crater, Mars, where it will land in February 2021. The main objective is to find signs of past microbial life in an ancient lake bed. One of the key differences from Curiosity is that Perseverance is a part of a sample return mission. Perseverance will collect Martian soil samples that are planned to be returned to Earth by NASA and the European Space Agency (ESA) in the early 2030s. The Mastcam-Z team responsible for the pair of high-resolution, multi-spectral stereo zoom cameras aboard Perseverance are based at ASU's School of Earth and Space Exploration.

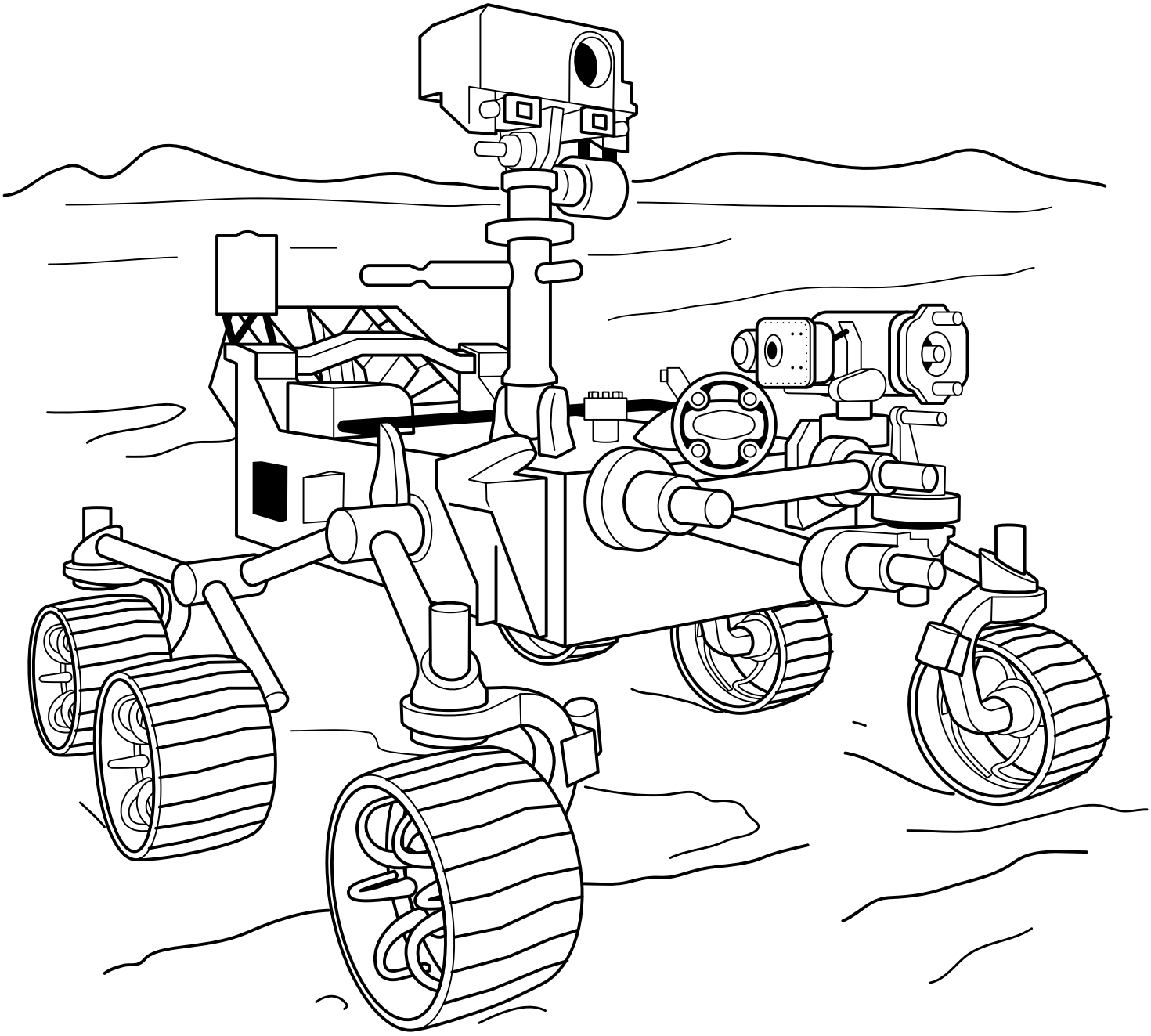

Tianwen-1 (天問)

Autonomously operated

China National Space Administration (CNSA), China

Successfully launched on July 23, 2020, Tianwen-1 is an interplanetary mission by the China National Space Administration that is currently en route to Mars and scheduled to land in April 2021. Tianwen-1, simply translated to “Heavenly Questions”, is a robot spacecraft that consists of an orbiter, deployable camera, a lander, and rover. The solar-powered rover will deploy shortly after landing on the Mars surface and begin performing chemical analysis on the surface and search for biomolecules and biosignatures.

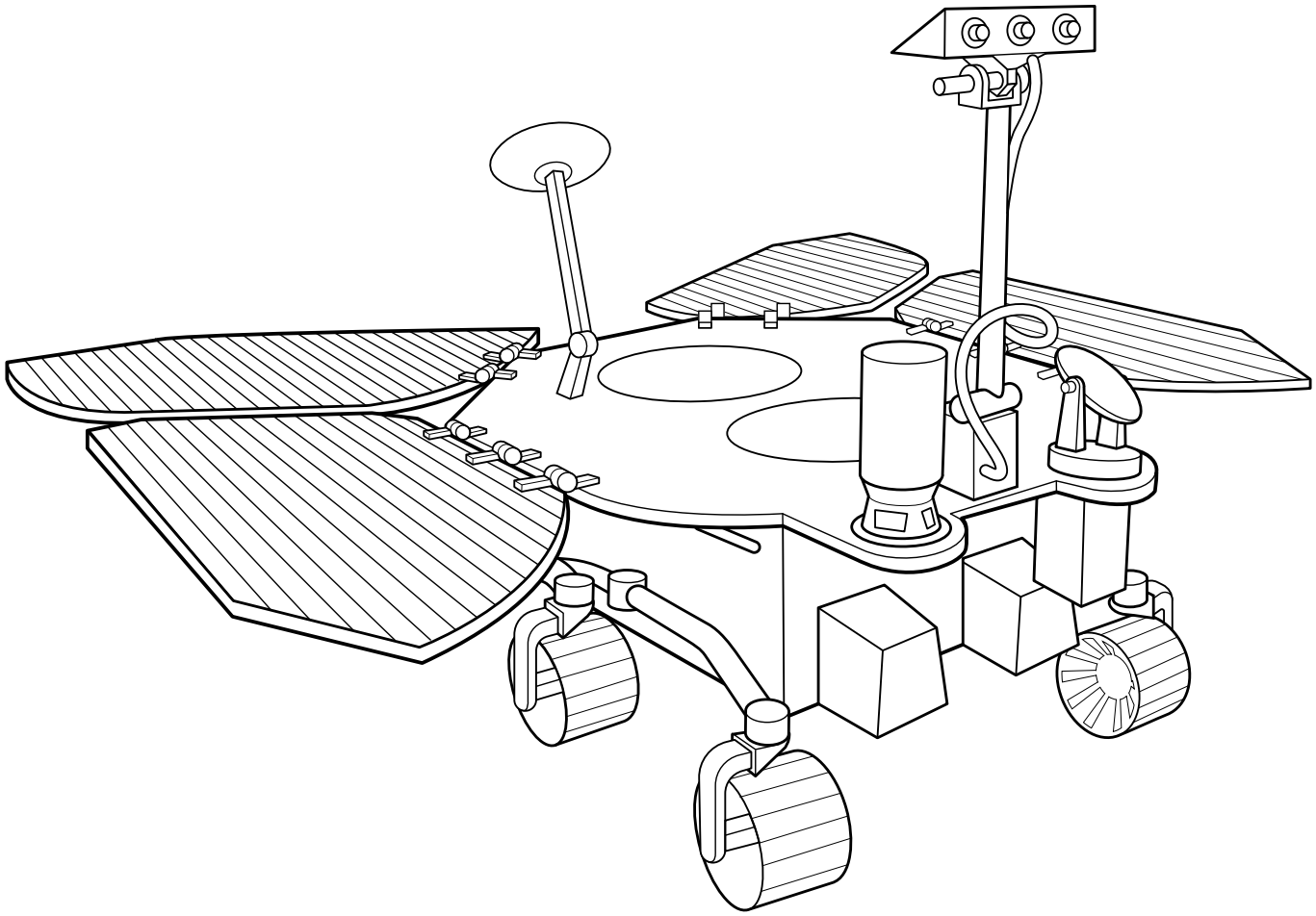

Volatiles Investigating Polar Exploration Rover (VIPER)

Autonomously operated

NASA's Johnson Space Center, Houston, Texas

Scheduled to launch in late 2023, VIPER will travel to the lunar south pole to prospect for resources in permanently shadowed regions (PSRs). These areas of the Moon likely have accessible resources like water-ice that could later be used during human space exploration missions. Resources on the Moon are important for space travel. They would allow travelers and visitors to make fuel, oxygen, and water, reducing the amount of supplies they need to bring with them, and drastically lowering costs and improving safety.

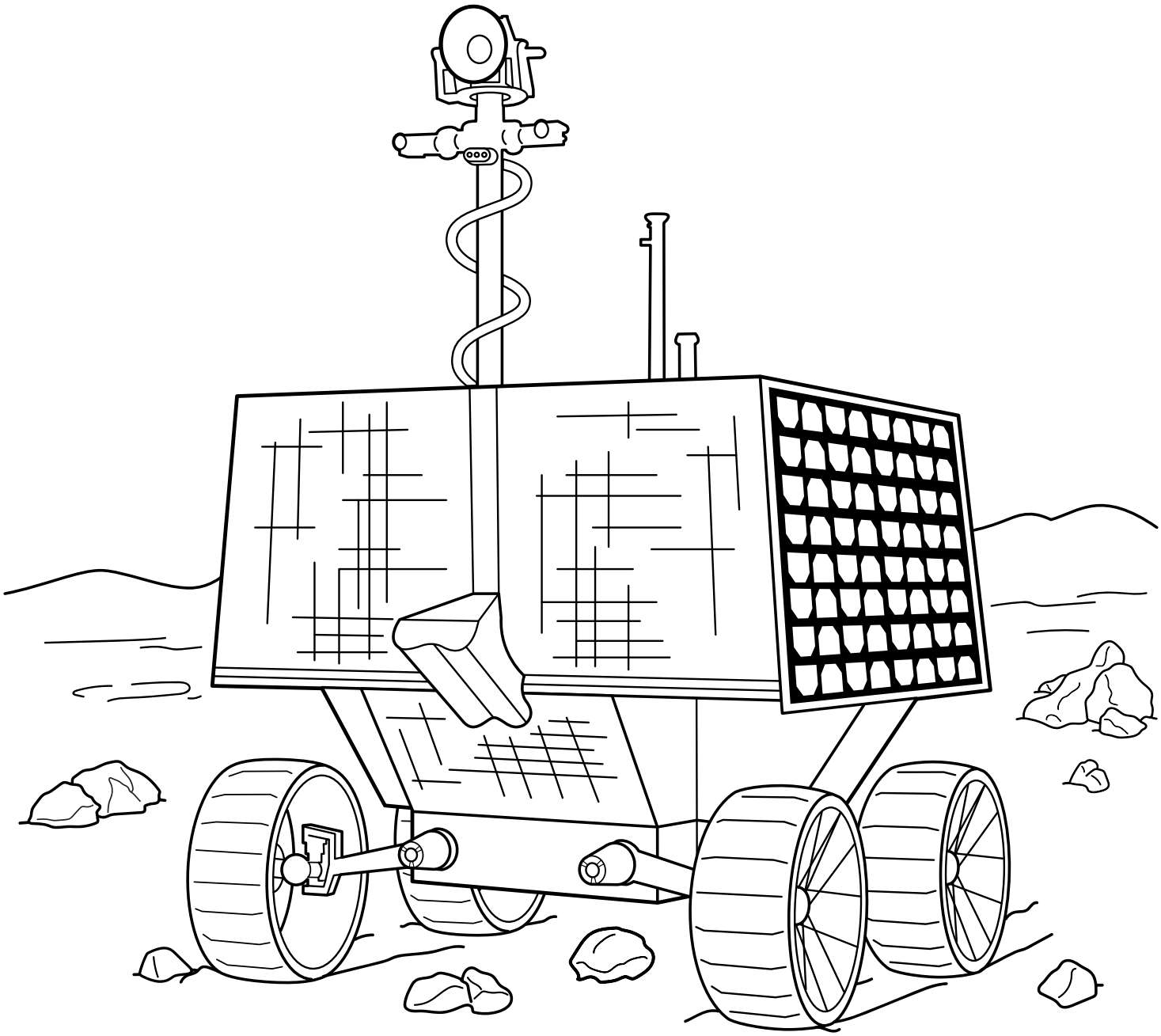

Rosalind Franklin

Autonomously operated

Airbus Defense and Space, Stevenage, United Kingdom

Like the British chemist and X-Ray Crystallographer, Rosalind Elsie Franklin, who made key contributions toward unraveling the double helix of human DNA, the similarly named rover led by the European Space Agency (ESA) seeks to unravel signs of past life at Oxia Planum near the martian equator. The rover is part of the international ExoMars program and is one of several planned sample return missions by ESA. It is scheduled to launch in September 2022 aboard a Russian launch vehicle and lander named “Kazachok”.

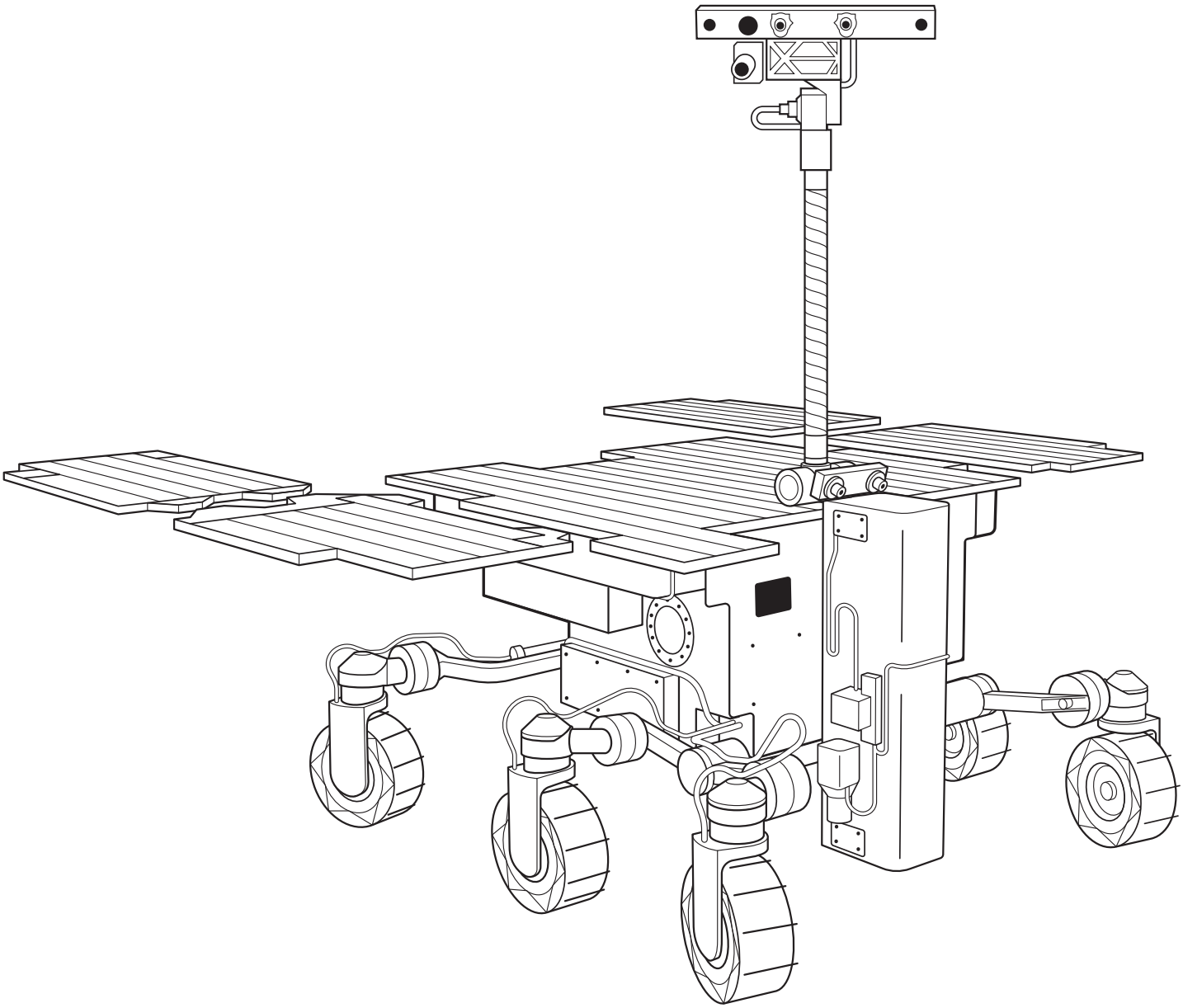

Intrepid

Autonomously operated

Planned exploration of Oceanus Procellarum and Aristarchus crater, the Moon

Intrepid is a mission concept developed by Arizona State University and NASA's Jet Propulsion Laboratory to send a long-lived rover to the Moon to conduct a geologic survey across 1800 km (1118 mi) over the course three years. Intrepid would visit sites spread across Oceanus Procellarum and Aristarchus crater on the nearsid of the Moon that span four billion years of lunar history to help answer many questions that scientists have about how the surface of the Moon was shaped.

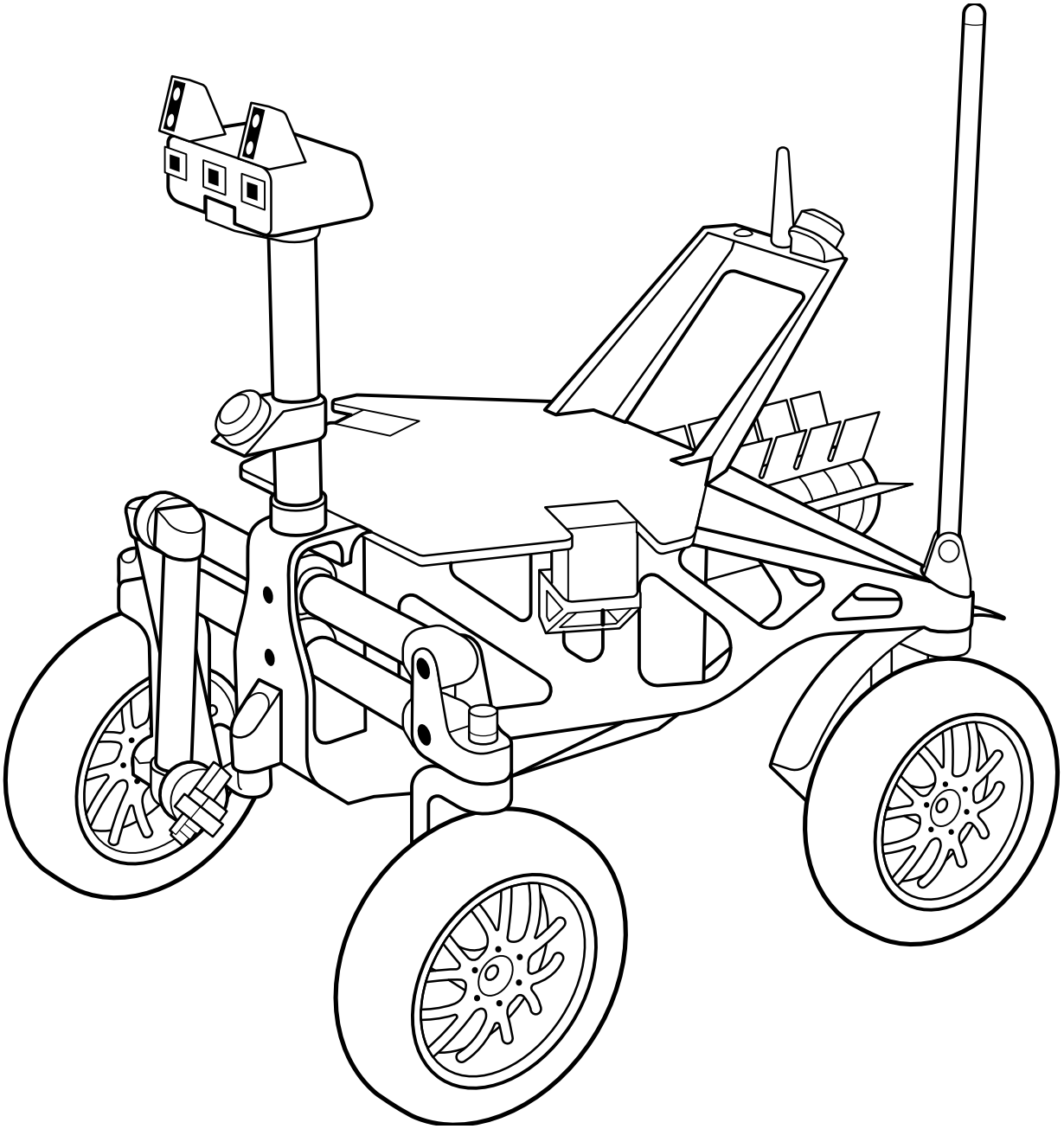

Rovers on the Moon

Rovers began their journeys into space with explorations to the Moon during the Apollo mission. The first rover (LRV) was folded up and stowed in a compartment of the Apollo 15 lunar module descent stage. These apollo-era rovers dramatically improved the distances that astronauts were able to travel while on the lunar surface. Since the Apollo rovers, many rovers have been sent to the Moon with many more in development. Lunar rovers have been an invaluable asset to scientists, helping build on the collective knowledge of planetary geology and space science.

*Rover experienced technical issues that resulted in a hard landing (crash) on the intended planetary surface or being lost in space.

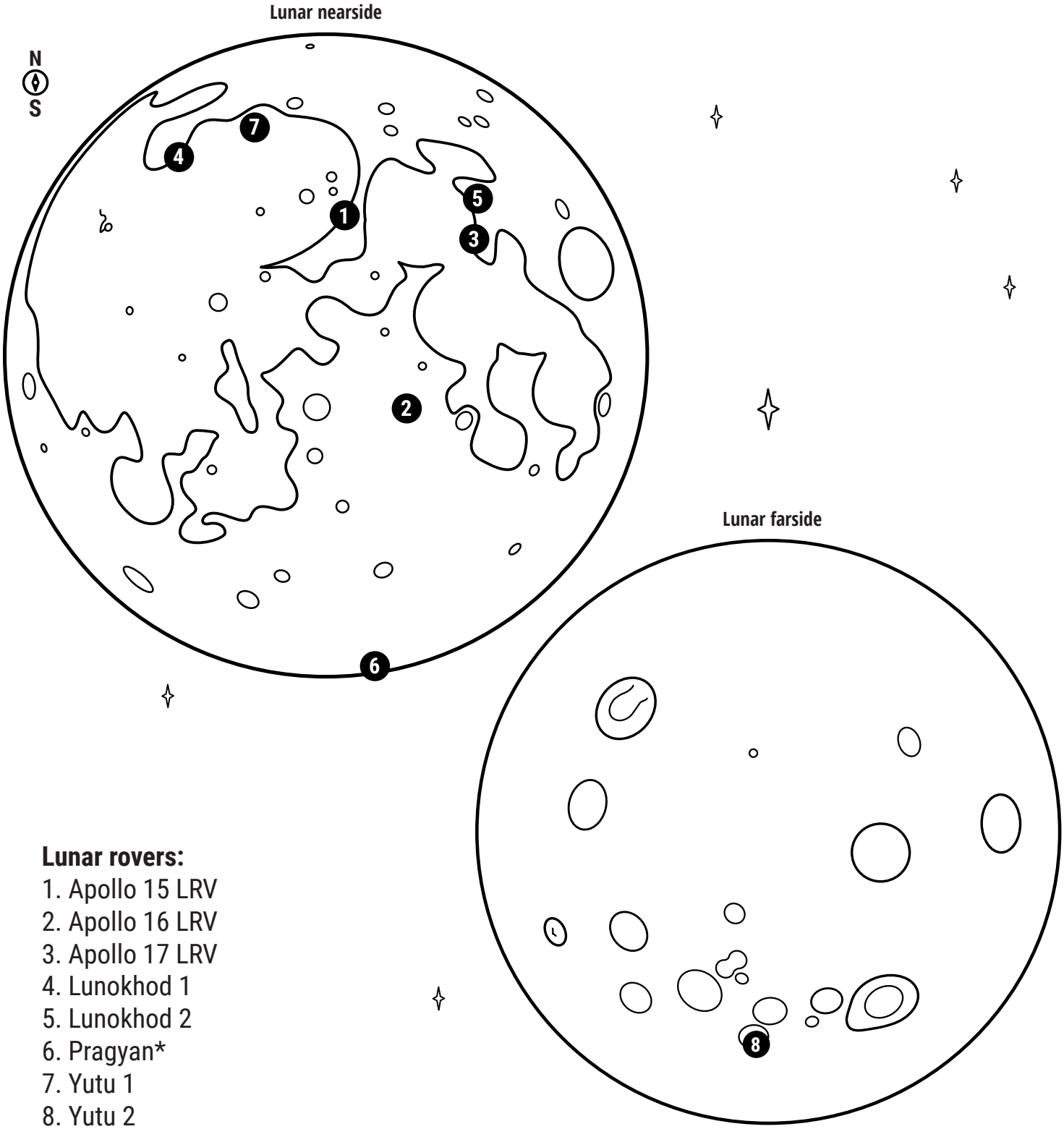

Lunar rovers:

1. Apollo 15 LRV
2. Apollo 16 LRV
3. Apollo 17 LRV
4. Lunokhod 1
5. Lunokhod 2
6. Pragyan*
7. Yutu 1
8. Yutu 2

Rovers on Mars & Asteroid Ryugu

The first rover to successfully land on the Mars surface and return data to Earth was Sojourner in July 1997. Sojourner rover was part of the Mars pathfinder mission that tested many new goals and methods for building, launching, and landing robotic missions. Since Sojourner several additional rovers have successfully traveled to and operated on Mars, returning substantial amounts of data that has helped us discover a great deal about Mars and the martian environment during a time when human exploration was too dangerous and expensive.

*Rover experienced technical issues that resulted in a hard landing (crash) on the intended planetary surface or being lost in space.

Martian rovers:

1. Curiosity
2. Opportunity
3. Perseverance
4. PrOP-M, Mars 2*
5. Sojourner
6. Spirit

Ryugu rovers:

7. MASCOT
8. MINERVA-II-1

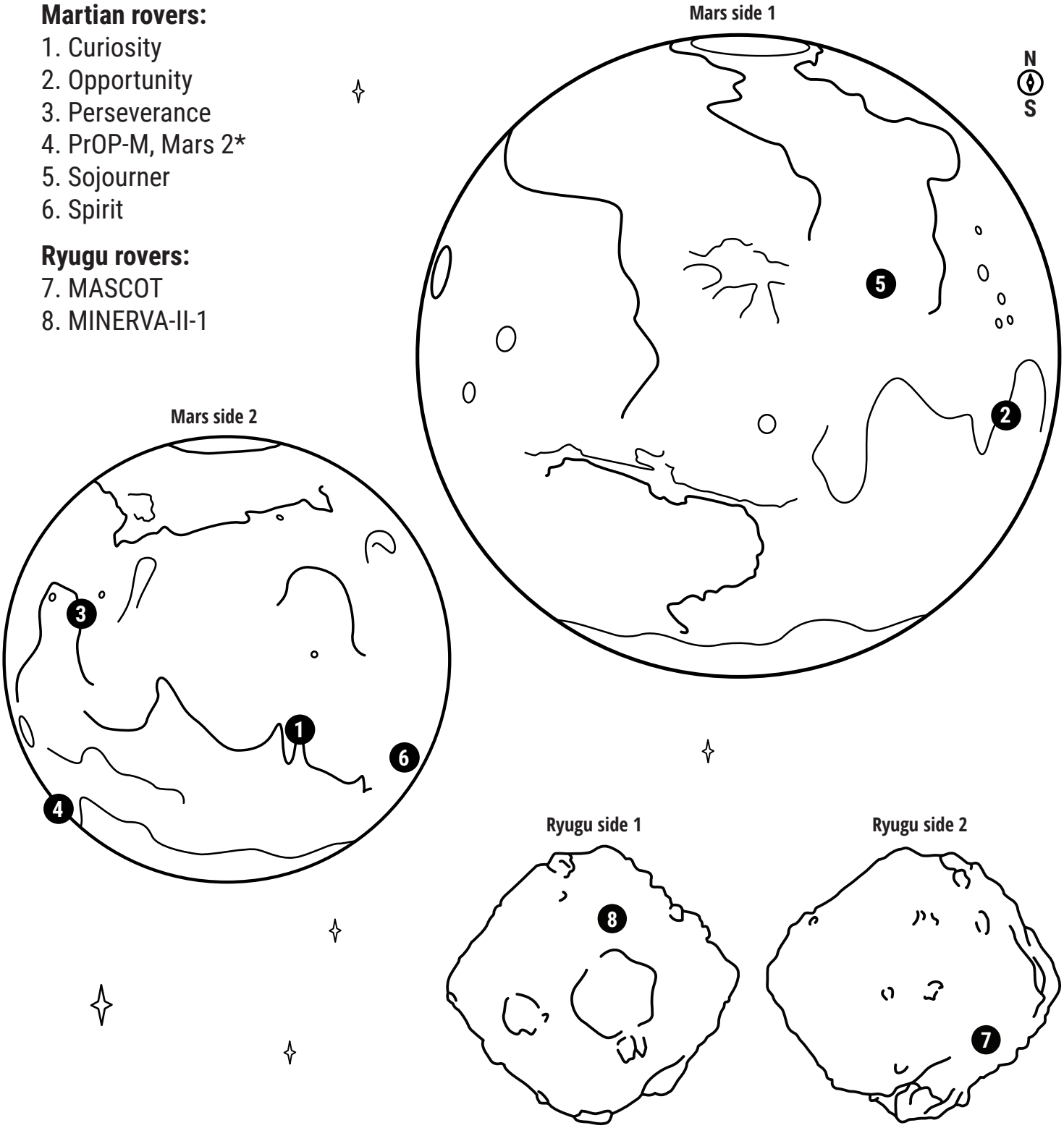

Help the Rover through the Maze

Many amazing discoveries in planetary geology and space science have been made thanks to rovers. So many more secrets are waiting to be uncovered though. One big question that scientists and engineers are using rovers to help answer is: where can water-ice be accessed on the Moon? Water-ice is water deposits near the lunar surface that have been frozen and trapped, likely deep inside craters near the north and south poles. A rover's journey into a lunar crater is dangerous though. It takes lots of research and planning to guide a rover down the steep crater walls. Help the curious rover below by planning a safe route to the bottom of the crater where the water-ice is waiting to be found!

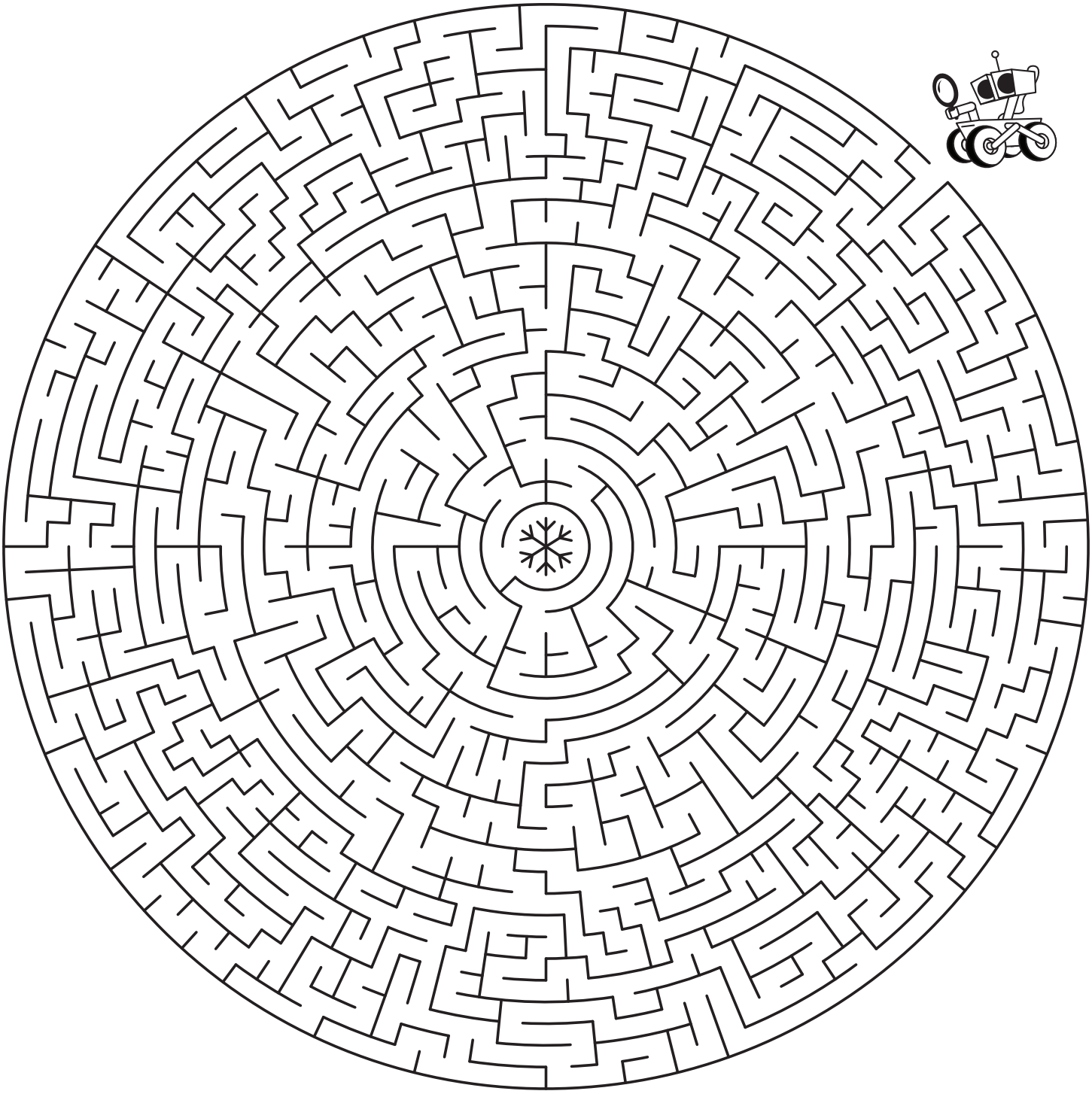

Rovers Discovery Word Search

From the Moon to Mars, and the Ryugu asteroid somewhere in between; from Kennedy Space Center in Florida, to Arizona State University in Tempe, rovers can be found being developed all over Earth or deployed to key locations throughout our solar system, helping scientists discover answers to important questions about planetary bodies and their origins within the Milky Way galaxy. Just like these sophisticated rovers, you too have an amazing ability to discover. Humans have a unique skill when it comes to recognizing patterns in just about anything. Test out your keen ability on this rovers word search.

W	I	T	F	B	Q	E	X	P	L	O	R	A	T	I	O	N	V	R	D
H	S	H	L	C	T	I	Y	C	Q	J	L	M	N	H	B	O	I	A	A
R	C	H	U	W	Y	A	S	O	S	K	A	A	O	C	V	A	U	F	R
P	I	H	N	T	C	Y	R	H	S	B	K	S	P	U	A	S	B	I	I
L	E	M	O	V	H	W	H	G	L	O	A	C	T	R	M	T	E	W	Z
Q	N	O	K	I	O	H	H	I	O	L	S	O	M	I	A	E	I	E	O
W	C	O	H	P	P	Y	N	S	P	A	T	T	A	O	R	R	Y	I	N
C	E	E	O	E	U	D	L	O	E	I	R	I	S	S	S	O	R	Z	A
X	Y	Z	D	R	J	Y	J	J	W	C	O	S	T	I	M	I	C	R	S
Q	Q	E	W	P	K	P	K	O	B	I	N	K	C	T	D	D	X	O	T
T	Q	M	R	V	N	B	K	U	Q	Z	A	D	A	Y	N	B	D	S	A
P	Q	U	U	E	J	N	K	R	U	C	U	M	M	T	A	M	S	A	T
Y	J	I	S	N	A	L	T	N	B	D	T	T	Z	D	Q	W	U	L	E
U	N	O	G	K	X	I	M	E	I	S	R	O	K	Z	Y	E	S	I	U
T	A	P	S	X	A	H	Q	R	P	R	O	P	M	M	I	N	U	N	N
U	U	P	C	E	M	I	N	E	R	V	A	M	G	O	P	A	P	D	I
J	C	O	D	G	B	X	C	H	A	T	V	X	Z	O	T	S	P	F	V
M	U	R	I	D	E	E	U	P	R	A	G	Y	A	N	L	A	H	R	E
F	K	T	M	B	M	V	O	X	Q	O	G	R	O	V	E	R	U	A	R
R	C	U	T	I	A	N	W	E	N	J	J	M	R	C	Z	Y	M	N	S
O	E	N	S	G	J	B	Z	D	R	Y	V	S	P	C	H	Q	Y	K	I
V	S	I	I	L	P	A	T	H	F	I	N	D	E	R	K	N	Q	L	T
E	A	T	C	N	M	B	L	R	O	C	R	B	T	M	A	R	E	I	Y
R	M	Y	Y	W	G	N	L	U	I	N	O	J	J	I	F	V	E	N	W
P	E	R	S	E	V	E	R	A	N	C	E	E	X	O	M	A	R	S	L
N	N	V	T	H	E	R	M	O	E	L	E	C	T	R	I	C	Y	Y	N
O	U	D	Z	L	R	V	T	C	G	S	P	I	R	I	T	C	G	X	Q
H	A	Y	A	B	U	S	A	C	L	A	P	O	L	L	O	Y	P	T	O
B	T	I	W	X	M	F	S	O	L	A	R	S	Y	S	T	E	M	D	V
V	Q	F	I	K	J	I	O	P	I	N	V	E	S	T	I	G	A	T	E

Apollo
Arizona State University
Asteroid
Astronaut
Curiosity
ESA
EXOMARS
Exploration
Grover
Hayabusa
Investigate
ISRO
JAXA
LROC
LRV
Lunokhod
Mare
Mars
MASCOT
MastCam-Z
MINERVA
Moon
MRVN
NASA
Opportunity
Pathfinder
Perseverance
Pragyan
Prop-M
Rosalind Franklin
Rover
Science
Slope
Sojourner
Solar System
Spirit
Thermoelectric
Tianwen
Tycho
USGS
VIPER
Yutu

Rover Mission Patch Activity

Space exploration mission patches are designed by project teams to symbolize the goals and objectives of their missions. For this activity, design a mission patch that shows off your mission using the popular mission patch templates on the next page, or create your own unique design using the templates as reference.

Supply List

Colored pencils, crayons, or markers
Paper, whiteboard, or tablet
Scissors

Instructions

1. Discover your mission

Divide into groups (or individuals depending on number of particpants) and start thinking of space exploration question(s) your rover mission could attempt to answer. Your expedition will help guide your rover patch design, which will represent your mission. Human exploration is back on the horizon, which means information regarding nearby chemical and mineral resources like water-ice are needed! New discoveries in planetary geology and the effects of long-term human exploration will also be needed. These are just a few ideas to get you started. The mission can be as simple or as difficult as you want. This activity can also be included with real, in-class robotics or exploration activities to help get groups thinking about their goals.

2. Brainstorm a design

Making sure your team includes everyone, use a scratch piece of paper or other drawing surface, brainstorm the design elements that will show off the goals and objectives or your mission. Try to come up with at least three elements. Take a look at previous NASA mission patches (figures 1-8) to help generate ideas for your mission patch. If you're using a whiteboard or electronic device, be sure to take pictures or save your work. Your sketches will be useful in the next step.

3. Choose a template

Once everyone has had a chance to brainstorm design ideas, choose your final design elements and think of how they can be arranged neatly into your patch template. It might help to cut out any sketches and try to place them together on your patch template.

4. Create your patch!

Get to work creating your final patch. Divide up the work if necessary and start thinking about how you want to share your new patch. Feel free to post it to social media and tag us! #LROC #lunarreconnaisanceorbitercamera #LRO #lunarreconnaissanceorbiter

Figure 1. Apollo 11 mission patch

Figure 2. Apollo 13 mission patch

Figure 3. Mars Exploration Rover (Sojourner)

Figure 4. Mars Science Laboratory (Curiosity rover)

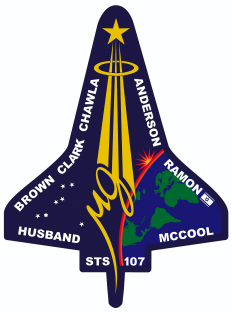

Figure 5. STS 107 mission patch

Figure 6. DM-2 mission patch

Figure 7. Lunar Reconnaissance Orbiter Camera mission patch

Figure 8. Lunar Reconnaissance Orbiter mission patch

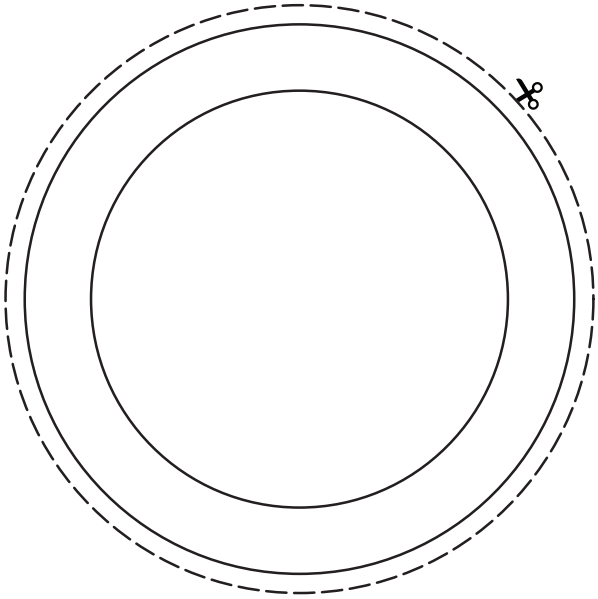

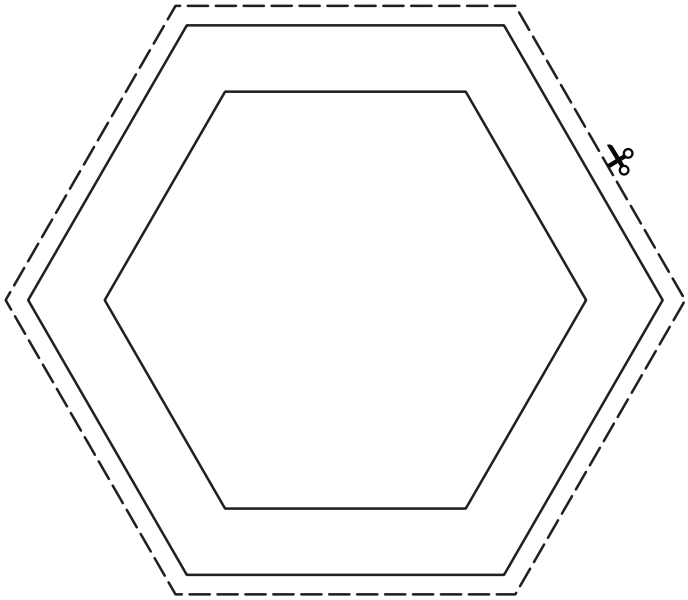

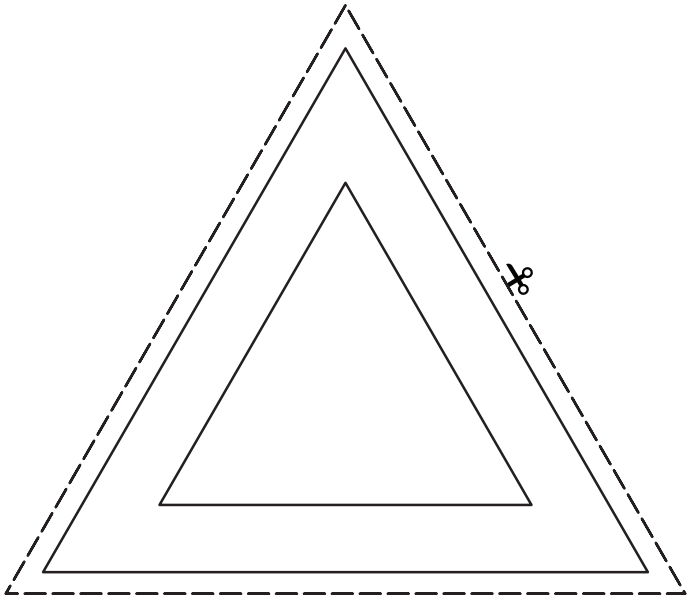

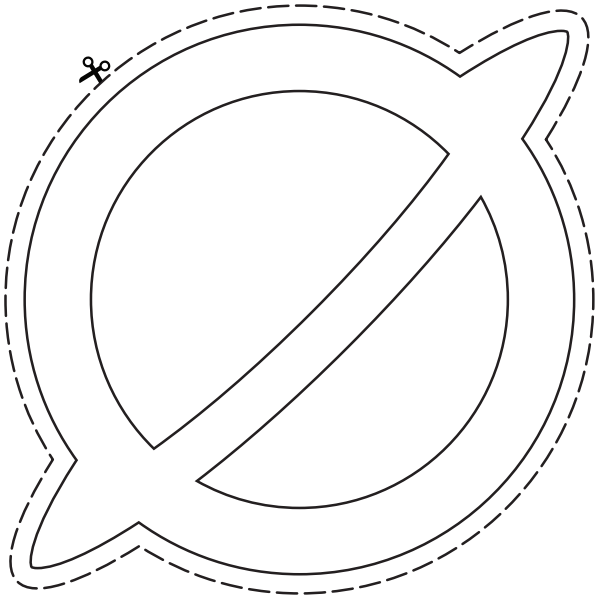

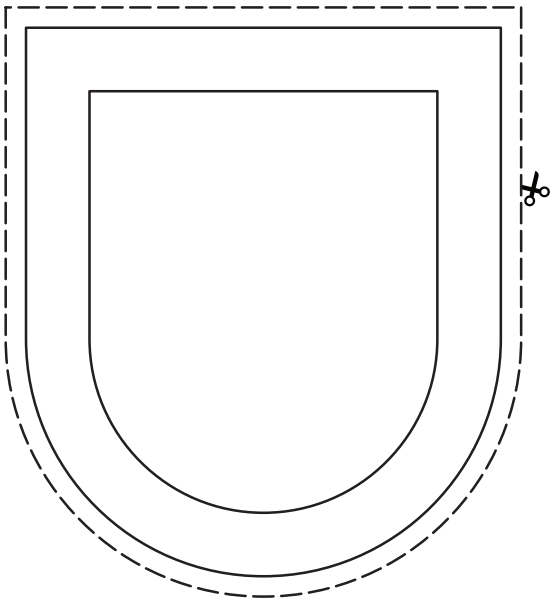

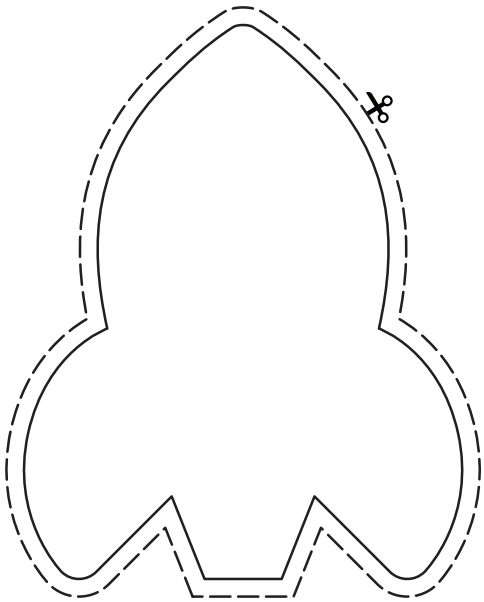

Blank page reserved for back of Rover
Mission Patch design activity cutouts.
You may remove this page if you are not
printing two-sided.

Blank page reserved for back of Straw Rocket activity instructions. You may remove this page if you are not printing two-sided.

Straw Rocket Activity

Create a paper rocket using the cutout templates on the next page and launch it with a drinking straw. Record flight data for each rocket and compare. Get creative and modify each rocket design to see how different modifications affect rocket flight!

Supply List

Pencil
Scissors
Tape
Straws (recyclable, reusable, or plastic)
Measuring tape or similar
Rocket template

Instructions

1. Making the rocket body

Cut out the rocket body using the supplied template. Place your pencil in the center of the rectangle lengthwise and wrap the rectangle around your pencil to form a tube. Be sure that your pencil the same or slightly larger in diameter to your straw before taping the body tube together.

2. Attach the rocket fins

Cut out the rocket fins as one solid piece then cut them through the middle to create two identical fins. Attach the first fin to the body by aligning the bottom of the rectangle with the bottom of the rocket body. Place your tape (two pieces per fin) across the rectangular portion of the fin and wrap it around the body to secure the top and bottom of the fin (fig 1). Repeat for the second fin on the opposite side of your rocket.

3. Shape the fins

Bend each fin triangle inward toward its attached neighbor so that each fin is 90 degrees from each other. The fins will look like a plus sign when viewing the rocket from above or below (fig 2).

4. Shape the nose cone

Align the end of your pencil inside the body so the tip is just inside the end opposite the fins. Shape the end of the body around the tip of the pencil by pinching and twisting until you achieve a desired cone. Wrap tape around the cone going across the body (fig 2). Try to make the cone as smooth as possible without using more than a few small pieces of tape.

5. Measure the rocket

Measure the nose cone of the rocket starting from the point that it begins to taper to the point of the cone and record its length in cm using the supplied data log. The completed rocket should measure a total of around 13 cm (about 5 inches) from end to end.

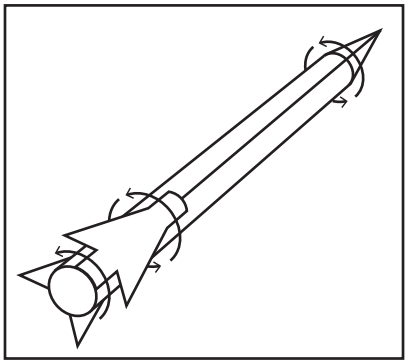

Figure 2. Fins & cone tape direction

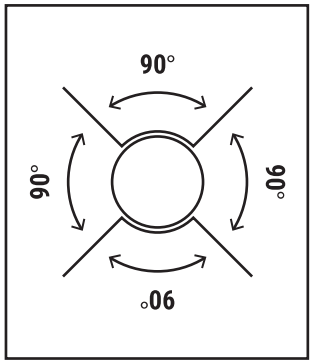

Figure 1. fin arrangement.

6. Launching your rocket

Remove the pencil from the rocket and replace it with your straw. Make sure you choose a launch site clear of debris and people and mark your standing location in order to measure the distance. Try to use the same strength breath during each launch of your rocket. Now count down from three and launch your rocket by blowing on the open end of your straw.

7. Measure each flight

Use your measuring device to measure from the marked launch site to the section of the resting rocket that's closest to the launch site. You may also choose to measure the distance using the first point of contact of the rocket with the terrain, but make sure you use one method of measuring distance *consistently*. Record the distance using cm in your data log and repeat. Launch each rocket at least three times in order to calculate a good average distance.

8. Modify your designs

See if you can improve the rocket and make it fly farther! Here are some ideas to help get you thinking: Change the angle of the fins, create new fin shapes by modifying the triangle cut lines on the fin template, try a longer body, use oversized pencils and straws for a larger diameter body. You could even add a little weight by coloring your rocket before assembly! Use your imagination and test each design at least three times, then compare the average distance to your original rocket's distance using the data log.

Straw Rocket Activity Template & Log

Data Log

Length of nose cone (in cm)	Distance traveled (in cm)					Notes
	Launch 1	Launch 2	Launch 3	Launch 4	Launch 5	

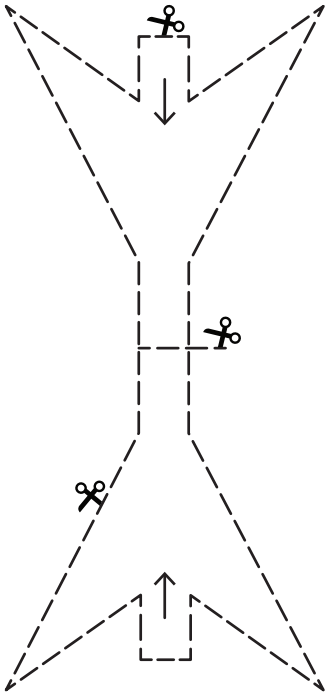

Cutout Templates

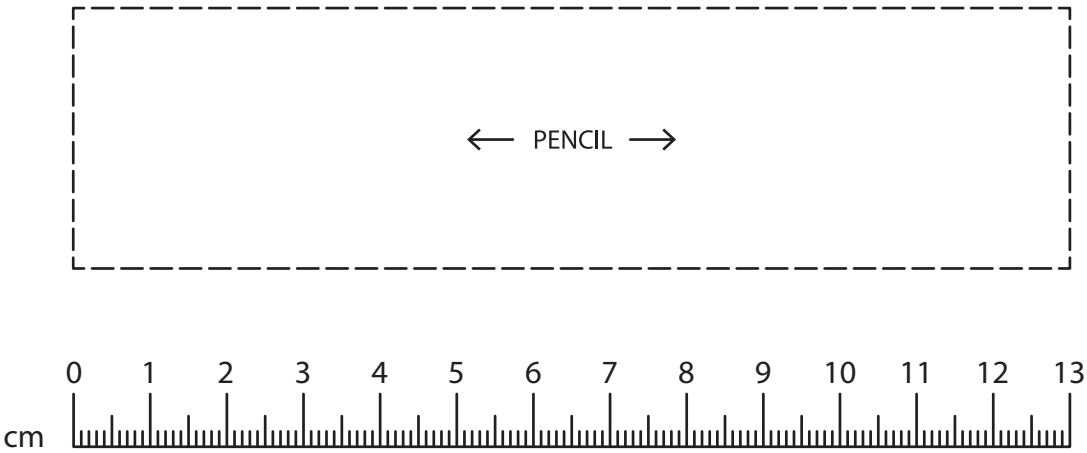

Blank page reserved for back of Straw Rocket Activity Template & Log. You may remove this page if you are not printing two-sided.

Blank page reserved for back of Build a Rover activity instructions. You may remove this page if you are not printing two-sided.

Build-a-Rover Activity

Build your own rover using pre-supplied rover parts or by designing your own! Cut out the designs and assemble them however you want. Rovers needs a few crucial parts like a power supply, navigation (imaging) system, wheels & suspension, and tools or instruments to help you investigate and discover!

Supply list

Rover cutouts (pages 31, 33)
Scissors
Tape

Instructions

1. Brainstorm the mission

Divide into groups (or individuals depending on participant size) and start thinking of space exploration question(s) your rover mission will seek to discover or investigate. This will help you decide what parts and instruments your rover will need. For example, if you plan on discovering more about the composition of your destinations geology, you will likely need a collection tool like a claw or a drill and a robotic arm to use them!

The more parts your rover has, the more expensive it will be to launch. This is one of the biggest struggles that scientists face with every launched mission. Try to limit your list of plans and focus on a few investigations to give your rover the best chance at a successful launch!

To help inspire ideas, take a look at the supplied parts on the next few pages (31, 33). This may be done already if you completed the Rover Mission Patch activity (page 26).

2. Build and gather your parts

Cut out all the parts you'll need to build your rover using the supplied parts from this activity. If you're designing your own parts, think about using a supplied "body" or create one that can accommodate all your parts. Print and cut out your custom parts when finished designing. Once all your parts have been cut out, place them on a clean, flat surface and organize them neatly. If you're in a team, make sure everyone can see the parts.

3. Assemble the rover

If you're using the supplied rover parts, notice that each part is designed to fit together and be swapped out with similar parts. Start building your rover by attaching the wheels to the body using your tape. From here, all the other parts can be arranged however you like. If a part doesn't fit somewhere, you may need to attach somewhere else. You might also think about what parts can be eliminated or design a new, larger body to accommodate all the parts.

Optional supplies for custom parts

Drawing tool (pencil, pen, stylus, computer mouse)
Drawing surface (white board, paper, computer, or tablet)
Printer (print your custom parts)

Part groups

1. Bodies
The base of your rover that holds the control systems, power systems, and other critical parts.

2. Wheels & mobility
Rovers have used many different techniques for moving around their environment. We've supplied a few ideas.

3. Power supplies
You can't do much without power! Think about how you want to operate your rover. If you use a solar array, you might not be able to explore or work during the nights.

4. Navigation & imaging
Cameras are crucial to rover navigation and are often (but not always) found on mastheads, which have also been supplied. Mastheads can get cameras and instruments up high, which helps rovers and operators see more. Cameras can also be located on and around the rover body or on the robotic arm.

5. Mast supports
If you decide to use a masthead, you'll need a support. Some are strong, some are light, and some are extra flexible.

6. Communications
Scientists need a way to communicate and control their precious rovers. Even an autonomous rover gets into trouble every now and again. This will also be used to communicate your exciting discoveries and transmit data to and from your rover to your base on Earth or the Moon.

7. Robotic arms
May be used to deploy your tools and instrument closer to objects or collect samples to store and test on your rover.

8. Arm instruments
Located on the end of the robotic arm, these instruments are used to image, detect, collect, and investigate your rover's surroundings in great detail.

1. ROVER BODIES

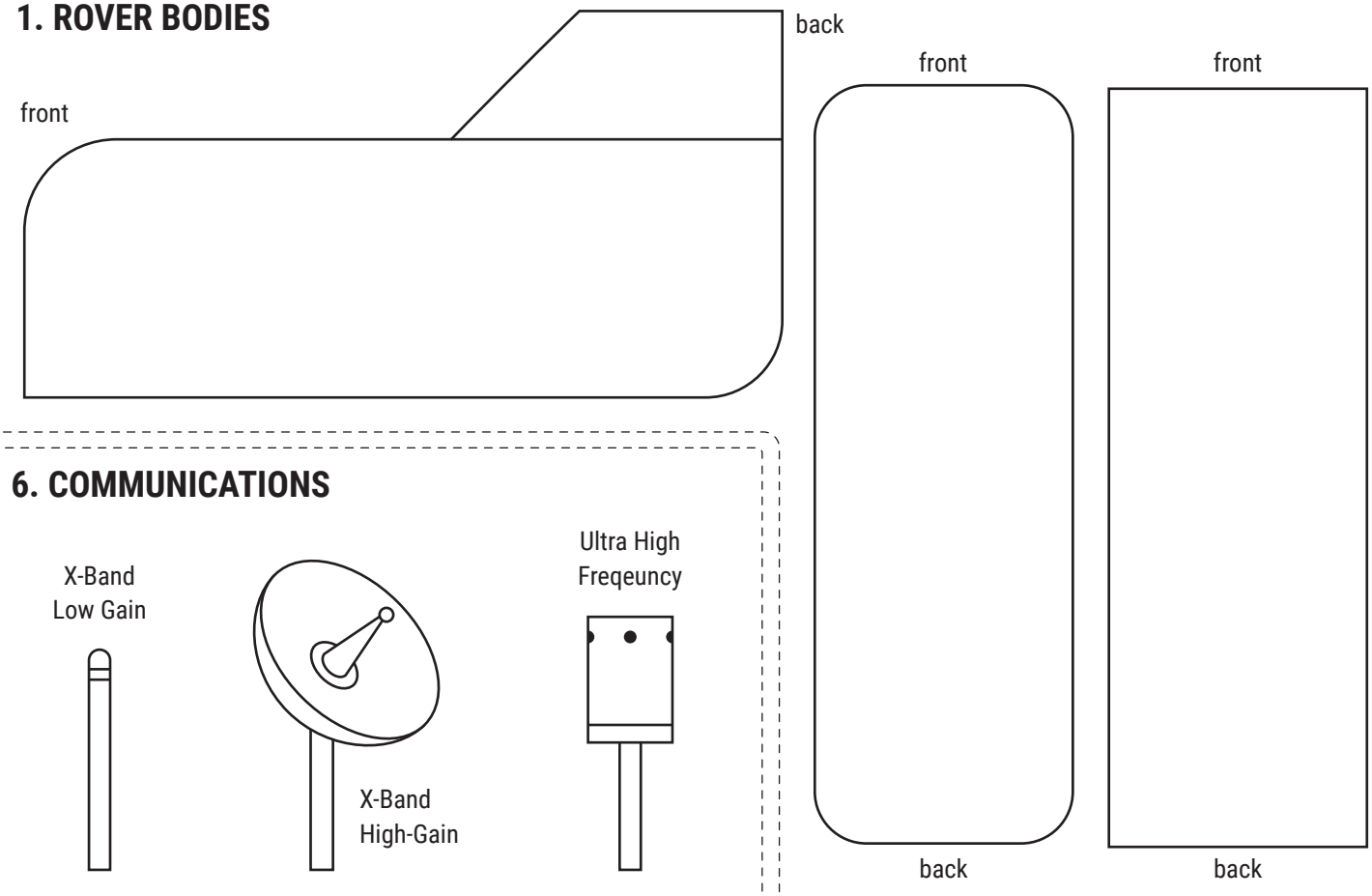

6. COMMUNICATIONS

3. POWER SUPPLIES

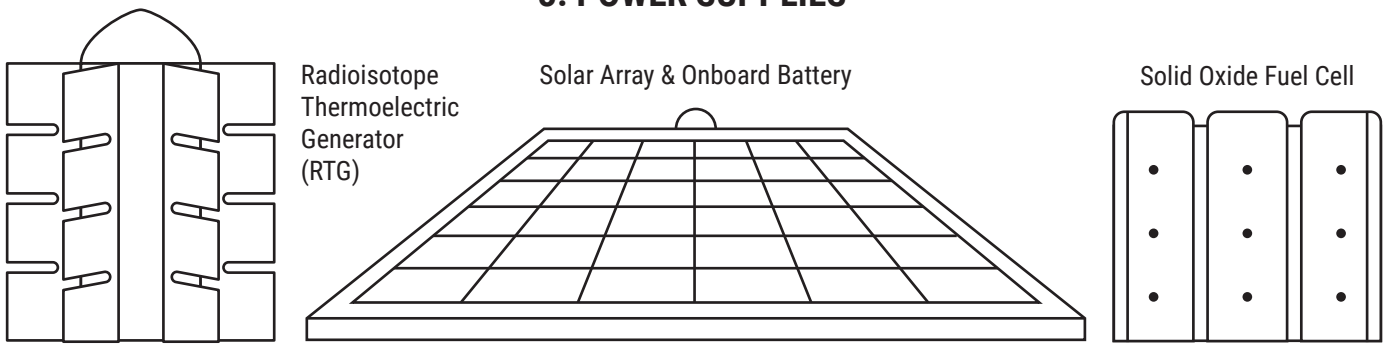

5. MAST SUPPORTS

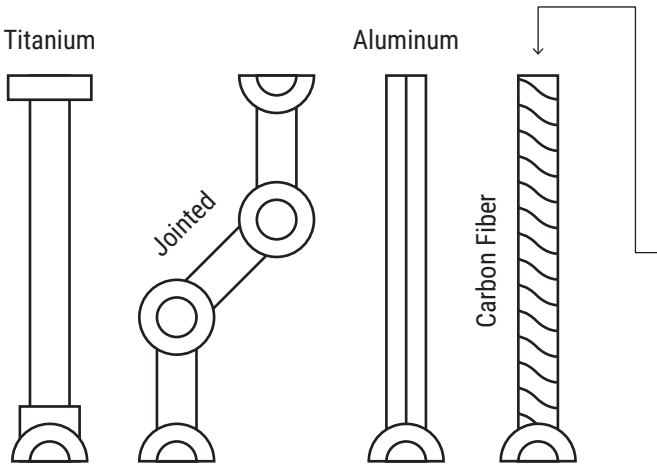

4. NAVIGATION & IMAGING MASTHEADS

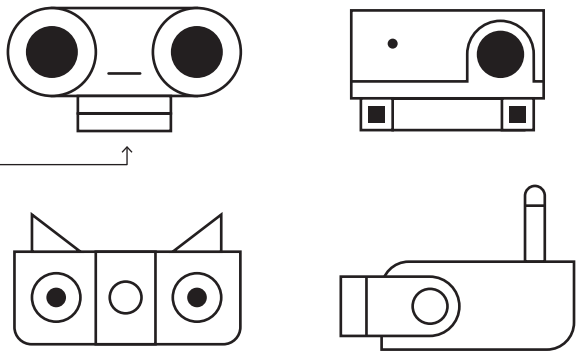

Blank page reserved for reverse side of Build-A-Rover activity cutouts page 1. You may remove this page if you are not printing two-sided.

2. WHEELS & MOBILITY

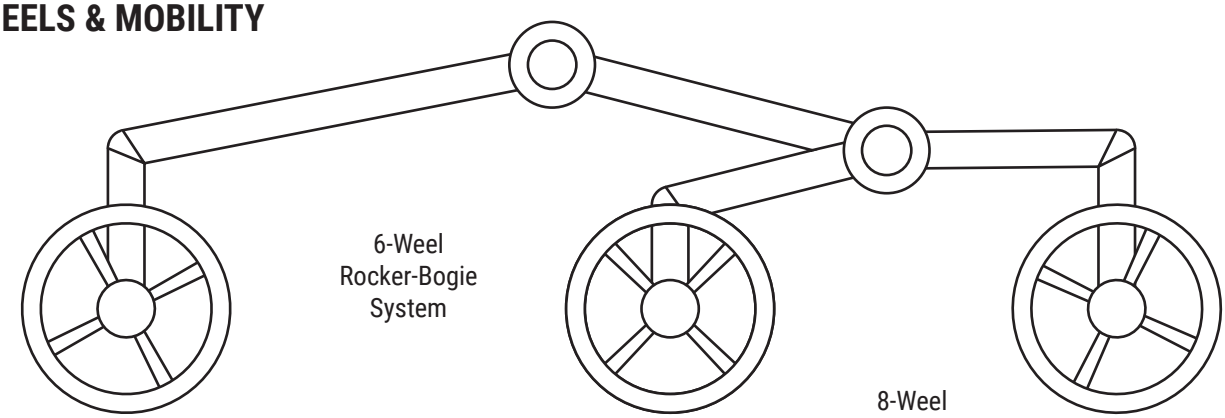

6-Weel
Rocker-Bogie
System

8-Weel
Suspended-Track System

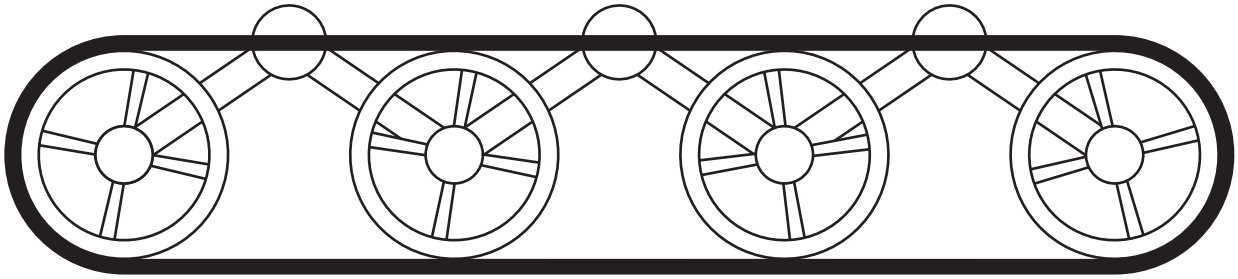

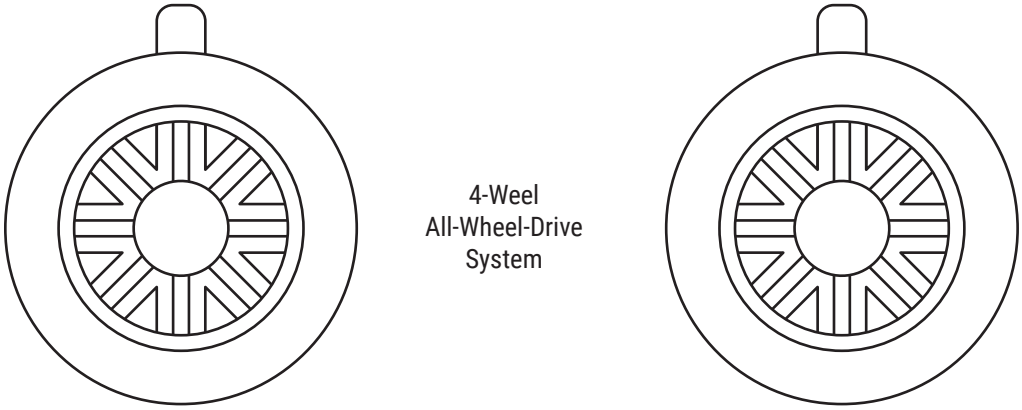

4-Weel
All-Wheel-Drive
System

8. ARM INSTRUMENTS

Detector

Camera

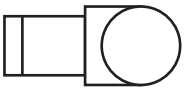

Claw

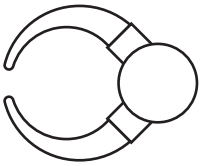

Drill

7. ROBOTIC ARMS

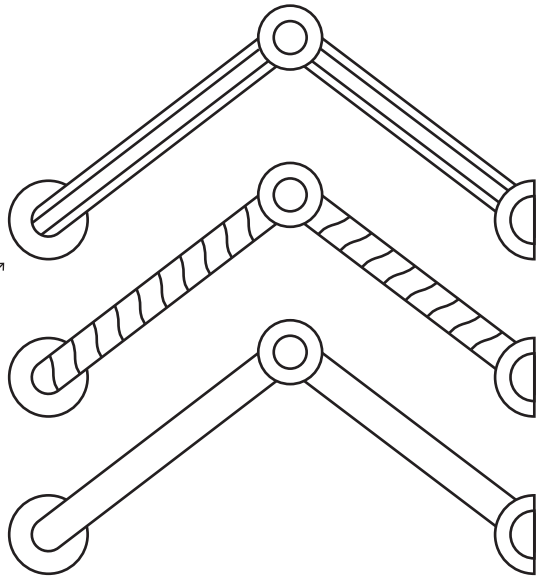

Reinforced
Aluminum

Carbon
Fiber

Titanium

Blank page reserved for reverse side of Build-A-Rover activity cutouts page 2. You may remove this page if you are not printing two-sided.

Marching Rovers of the Moon and Mars

A list of rover travel distances as of November 2020

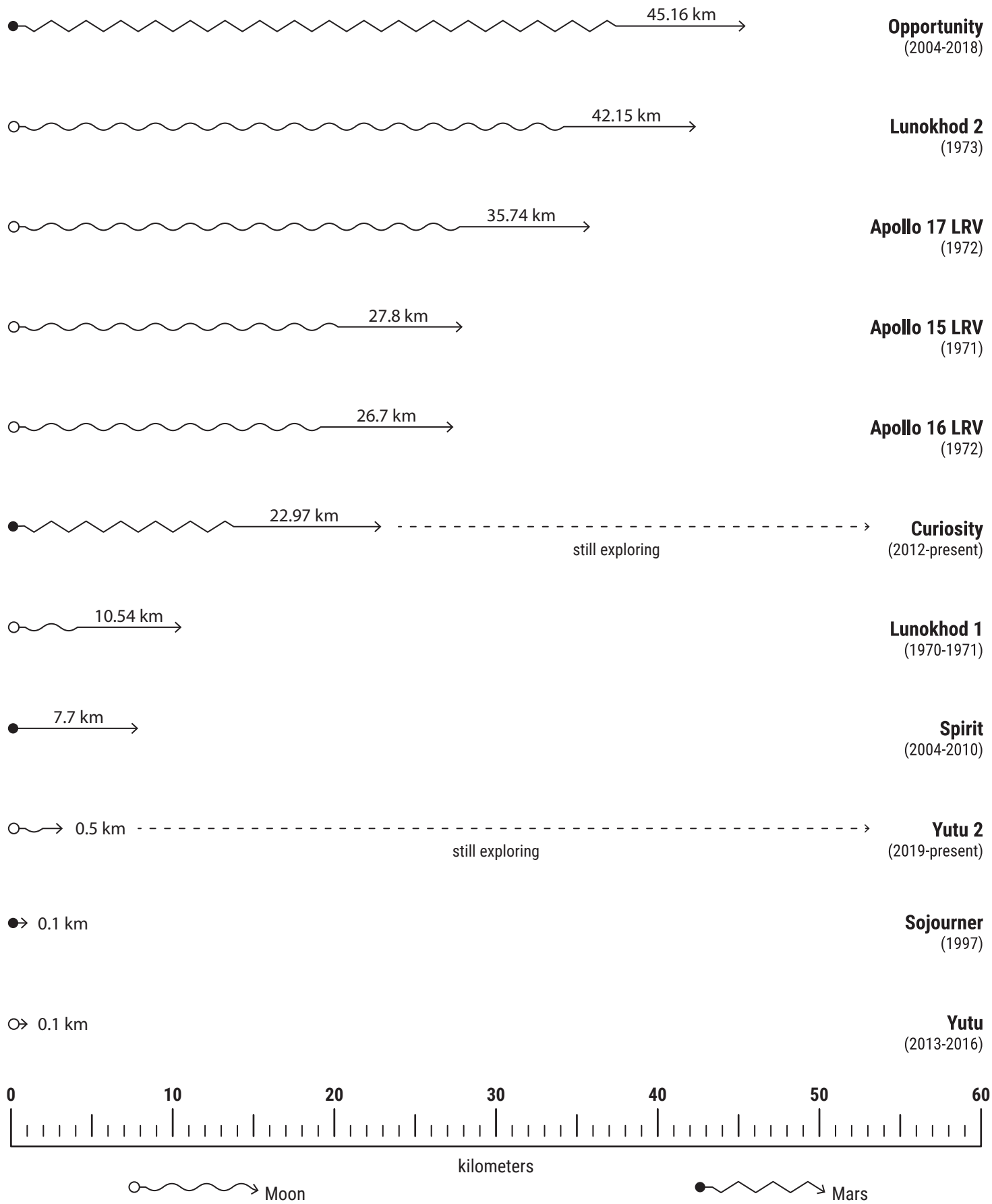

Lunar Reconnaissance Orbiter Camera
Science Operations Center
Arizona State University
School of Earth and Space Exploration
Tempe, Arizona

For more educator resources visit the educator's section or our website, lroc.sese.asu.edu. Coloring pages for this booklet were created by the LROC SOC team using images, diagrams, figures and inspiration courtesy of NASA, GSFC, USGS, JPL, and ESA. Icons used in this booklet were acquired from fontawesome.com, licensing is available online at fontawesome.com/license.