Flight Performance of the Inflatable Reentry Vehicle Experiment II

Robert Dillman,
NASA Langley Research Center

June 17, 2010

7th International Planetary Probe Workshop,
Barcelona, Spain

IRVE-II Flight: August 17, 2009

Separate RV from TM, 112km, 90s

Separate TM, RV assembly from Payload Shroud, 80s

RV begins broadcast of data after separation of Payload Shroud

Separate Payload from Booster, 70s

Coast to 81 km, 70s

2nd stage burnout, 44.5s
2nd stage ignition, 12.0s
1st stage burnout, 6.2s

Launch on Black Brant-IX
1399lb Payload
From Wallops Island

T=0s

WFF provides launch operations, telemetry acquisition, and radar track of flight

Apogee at 218km, 242s

Restraint cover release at 293s

Inflation valve opens at 297s

RV inflated to 1.5psi at 119km, 389s

Reentry Experiment starts at 80km, 416s

RV peak heat flux at 56km, 431s

RV peak pressure at 45km, 439s

Reentry Experiment complete at 40km, 446s

RV Folded at 7.9km, 858s

Loss of Signal at 2km, 1046s

Splashdown 167km downrange

IRVE-II RV / LV Separation Detail

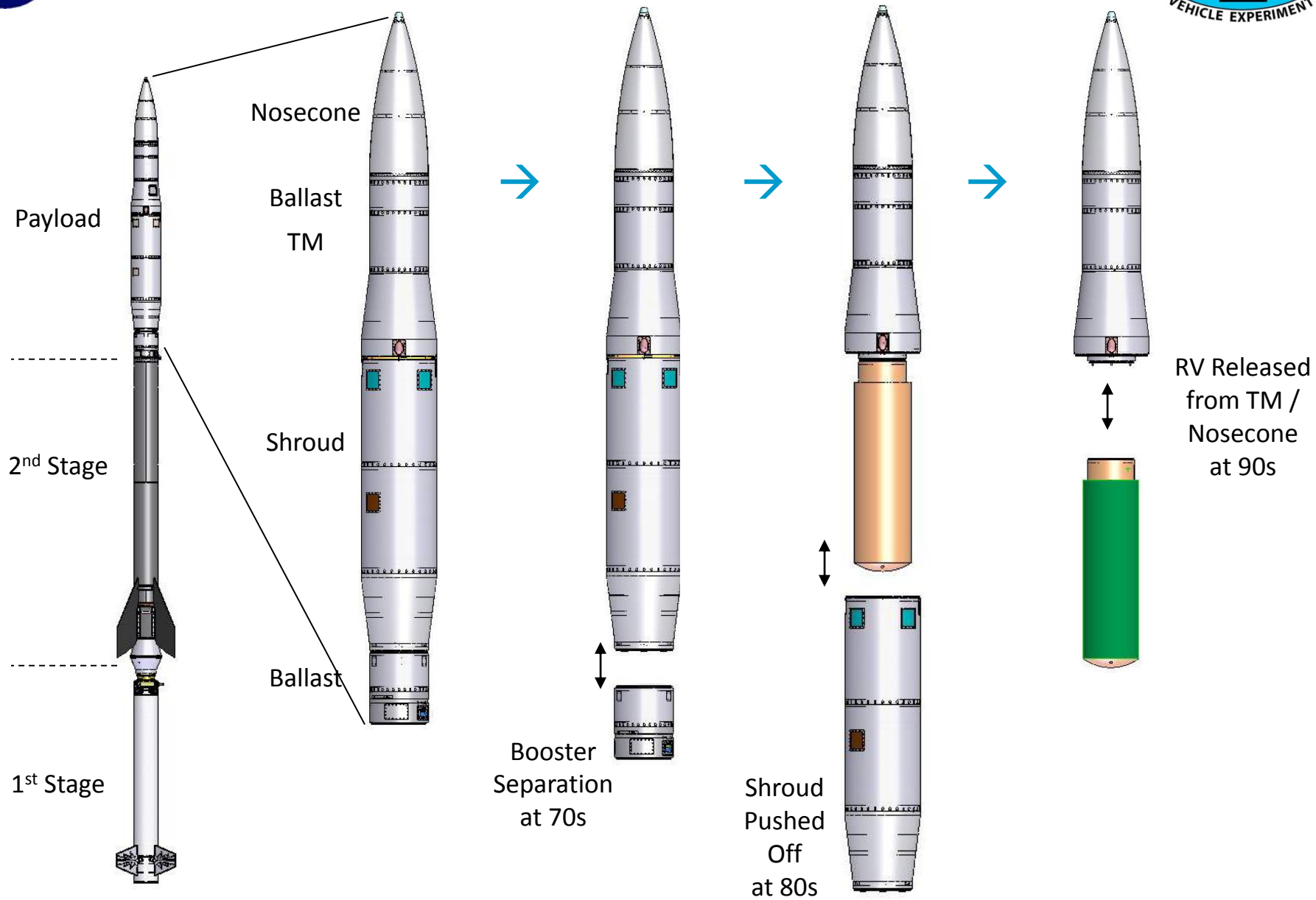

IRVE-II Mission Objectives

- ✓ Execute a flight-test that demonstrates Inflatable Aerodynamic Decelerator inflation and reentry survivability.
- ✓ Assess the thermal and drag performance of the inflatable reentry vehicle.
- ✓ Collect flight data for comparison with the analysis and design techniques used in the development of the inflatable reentry vehicle.

☺ Mission objectives and success criteria were all met

- IRVE-II inherited its Mission Objectives from the original IRVE design, which launched September 6, 2007, but was not released by the launch vehicle shroud.
- IRVE-II built the inflatable aeroshell to the IRVE design, and modified some flight electronics due to hardware availability issues and lessons learned.
- IRVE-II flew on a larger sounding rocket than IRVE, to accommodate a shroud with more payload clearance.
- Did not re-design the inflatable aeroshell to accept the full performance of the larger rocket; ballasted the rocket to limit the reentry heating to an acceptable level.

IRVE-II Reentry Vehicle

Stowed for Launch

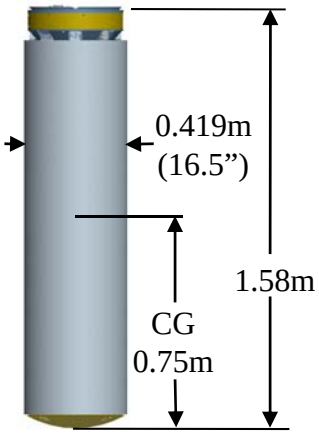

Inflated (3m diam)

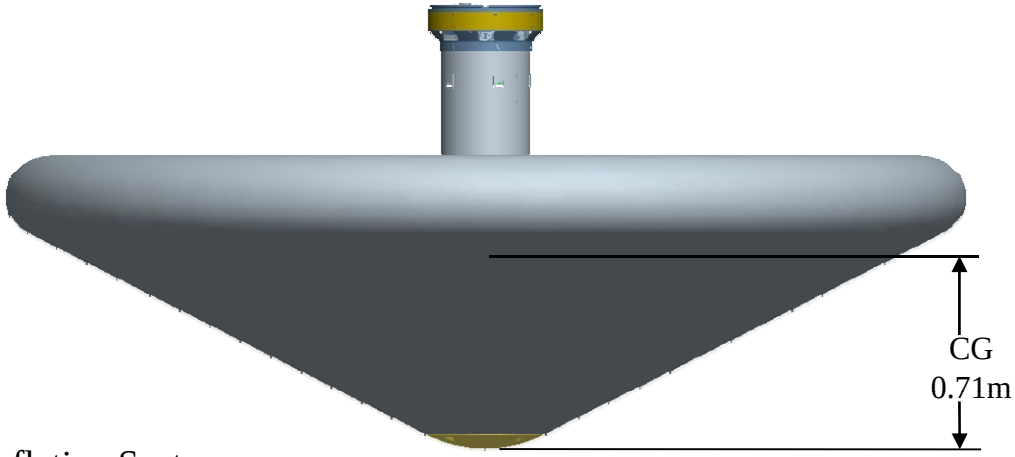

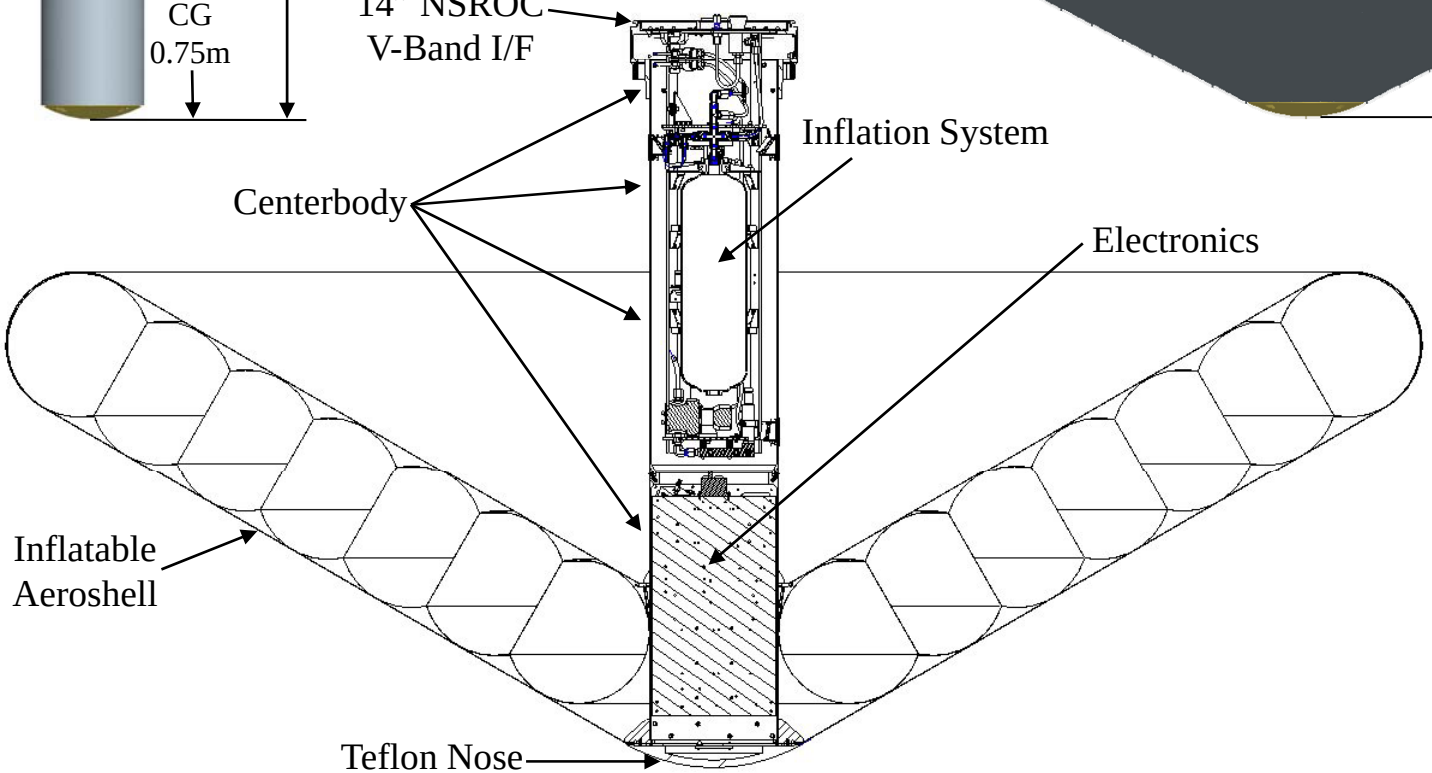

IRVE-II as-built:

2.93m diameter
126.5kg at launch
124.6kg at entry

45kg inflatable
34kg center structure
18kg electronics
17kg inflation sys
1.4kg nitrogen
~9kg balance weights
~1.9kg restraint cover

IRVE-II Aeroshell Layup

Multi-layer design

- Forward surface: Three layers of Nextel high-temperature fabric
- Three layers of Kapton as a gas barrier
- Structure: Silicone-coated Kevlar, wrapped in two layers of uncoated Kevlar
- Aft surface: One layer of Nextel over Kapton

Thermocouples

- 18 “surface” thermocouples behind the forward layer of Nextel
- 6 “in depth” thermocouples between the Kapton and the Kevlar structure
- In rings at 0.21m, 0.62m, 1.04m, and 1.45m from the vehicle centerline

- Pressure sensors in inflation system and in groups of aeroshell toroids

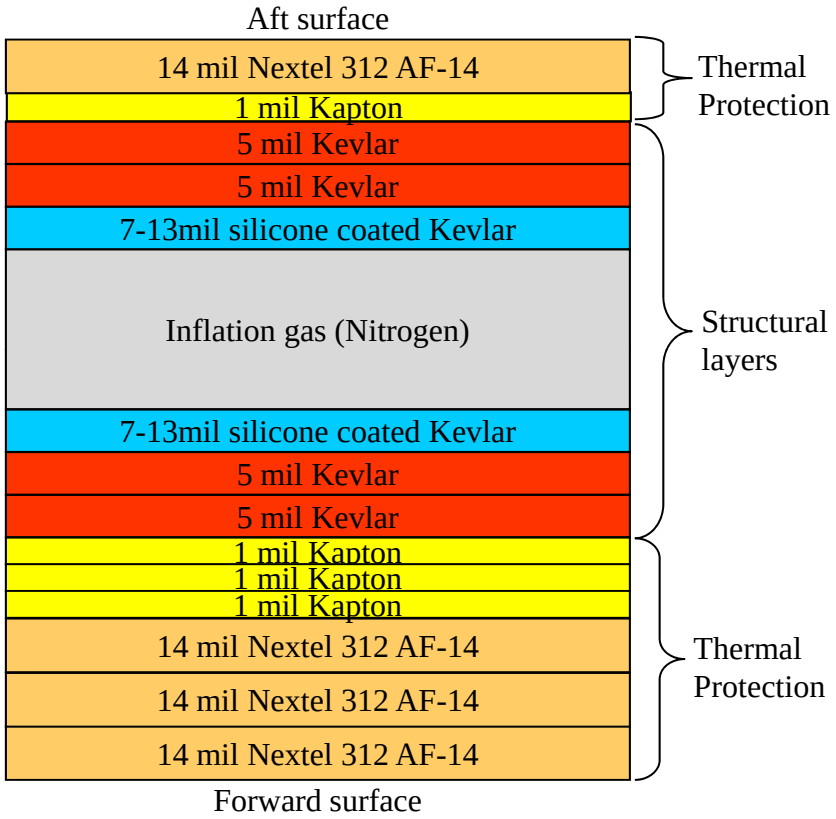

IRVE-II Inflation System

- Thoroughly tested pre-flight; full system test in vacuum
- System functioned in flight as planned; valves opened on command from event timer, and system inflated aeroshell volumes to 10.3KPa (1.5psi) before start of reentry (80km)
- Mechanical regulators maintained pressure above ambient conditions during descent; no active logic
- Nitrogen bottle exhausted at 680s, 15km altitude
- Aeroshell folded at 858s, 8km altitude

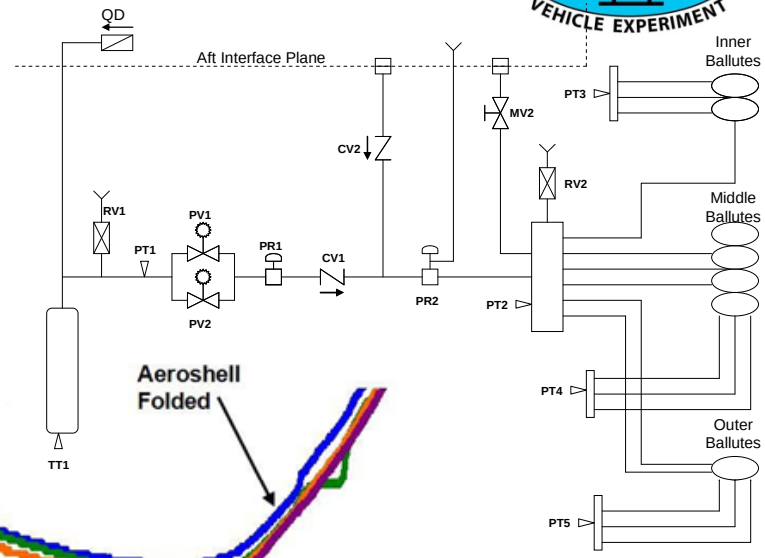

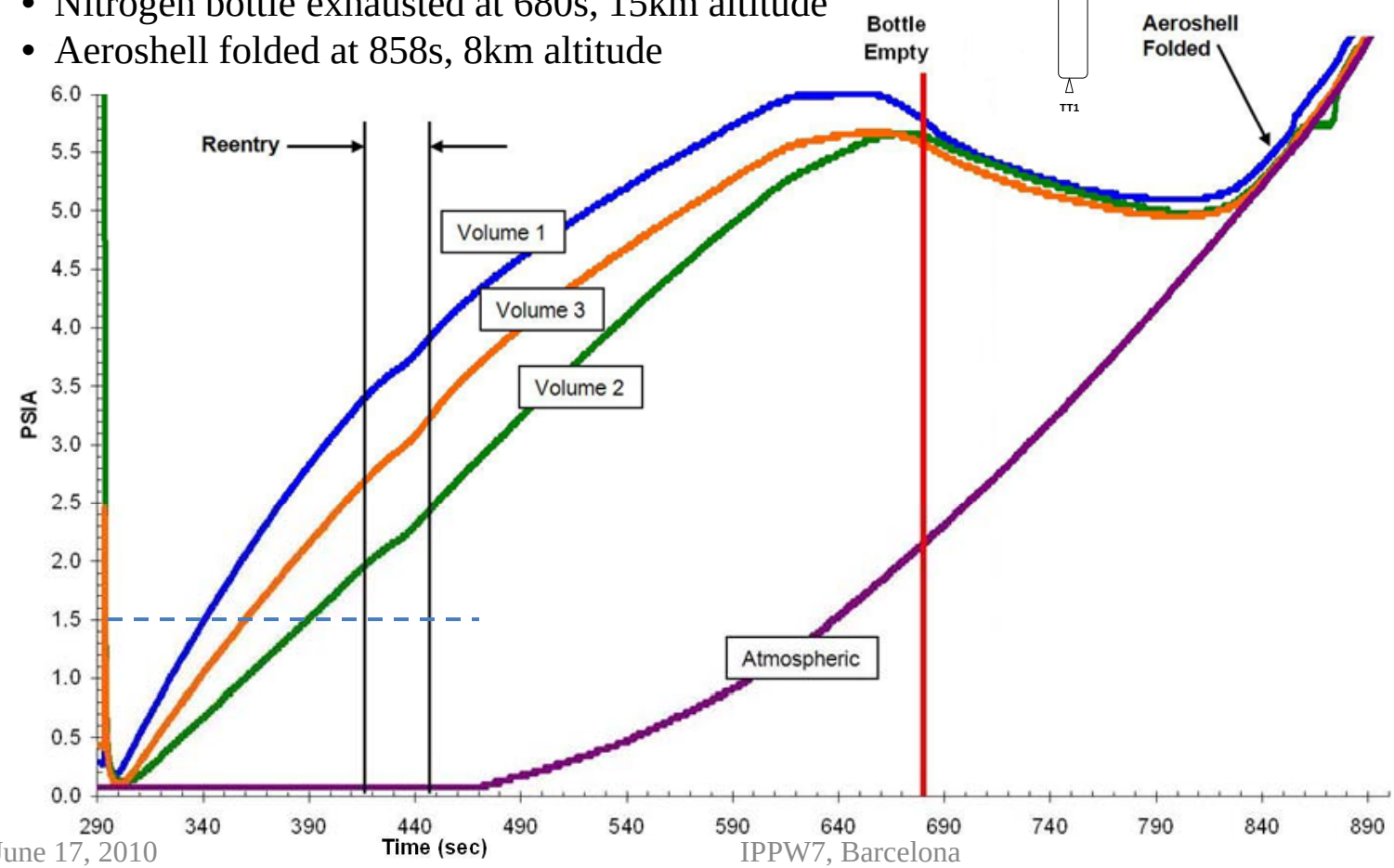

IRVE-II Trajectory Reconstruction

- IRVE-II was tracked by multiple ground radars. On-board sensors provided three-axis accelerations and roll rates, and magnetometer and sun angle data. Combined, these produced vehicle position and orientation time histories.
- Meteorology rockets before and after the IRVE-II flight provided atmospheric density, pressure, temperature, and horizontal winds from 30km to 92km.
- Launch vehicle performance exceeded nominal values by roughly one sigma.
  - Apogee was 218km instead of 212km.
  - Peak dynamic pressure 1180Pa (8.5G's), not 1040Pa.
  - Peak stagnation heat flux 2.20W/cm^2, not 1.97W/cm^2.
  - Peak Mach 6.2 instead of 5.5.
  - Splashdown 167km downrange instead of 145km.
- Aeroshell inflation perturbed trajectory only slightly; spin rate dropped from 3.5Hz to 0.16Hz.
- Total angle of attack was oscillating between 14deg and 22deg at start of reentry. Oscillations dropped to 5deg to 9deg through peak pressure and heating.
- Demonstrated stable flight through reentry and descent.
- Vehicle folded after inflation gas was exhausted.

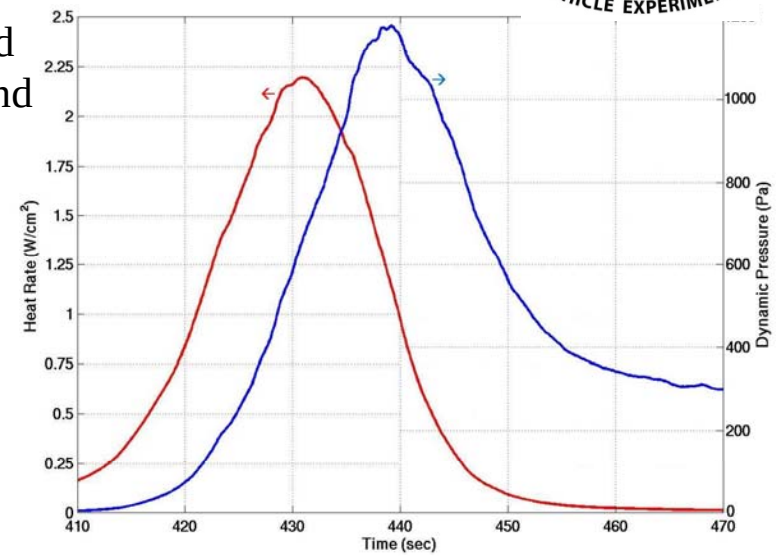

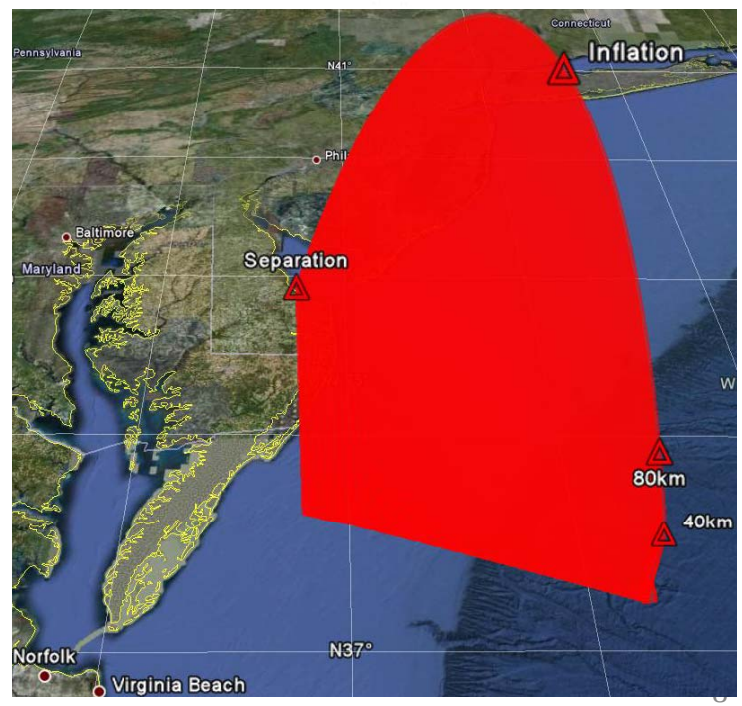

IRVE-II Thermal Performance

- Hot wall thermal analysis applied a margined heat flux as a function of time, position, and local surface temperature.
- Conservative model predicted the two sigma high trajectory would raise surface temperature to roughly 200C at the forward ring of thermocouples, and to 80C at the thermocouples on the aeroshell shoulder.
- Inner thermocouples were apparently shielded by Teflon nose cap – max temp 100C.
- Second ring largely appeared to agree with model, except for one TC perhaps touching inflatable.
- Third ring had one TC matching prediction, four below half the prediction, and one that measured temperature 60C over the prediction. (Bent forward against or through the forward fabric?)
- Outer ring predictions matched reasonably well.
- Need better control over thermocouple placement and orientation, to prevent pushing against fabric.
- Thermocouple positions were not measured relative to aeroshell fabric seams, where additional thermal mass would reduce measured temperatures.

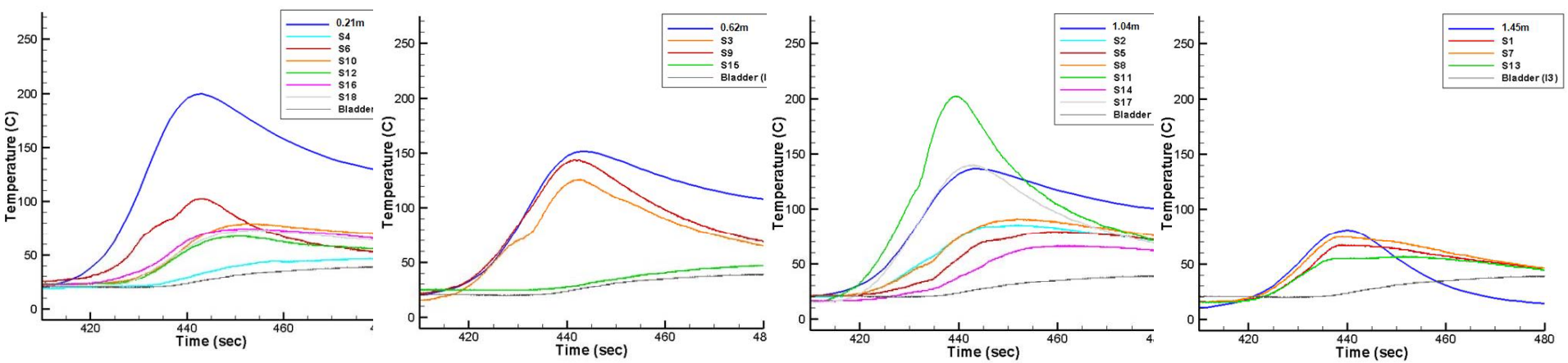

Future Plans

- IRVE-II demonstrated survivability and flight dynamics of inflatable aerodynamic decelerators, corroborating methods and design principles for flight dynamics and aerothermal analyses. Future flights are needed to test the technology at relevant heat rates and with larger scale vehicles.

- IRVE-3 is planned for launch in Spring 2012 on a three-stage sounding rocket, to increase heat flux by a factor of five to ten. Other upgrades include:
  - Improved structure and thermal protection, developed in parallel with IRVE-II.
  - Adding a re-sealable inflation valve, to reduce gas lost via pressure relief vents.
  - Adding an attitude control system and an IMU.
  - Adding heat flux gauges on the rigid nose, and more thermocouples. Better control of thermocouple placement.

- IRVE-4 plans demonstration of trajectory control via CG movement.
- Plan to continue TPS development, and to manufacture a large scale development unit, working toward a future large scale flight.

IRVE-II Flight Video

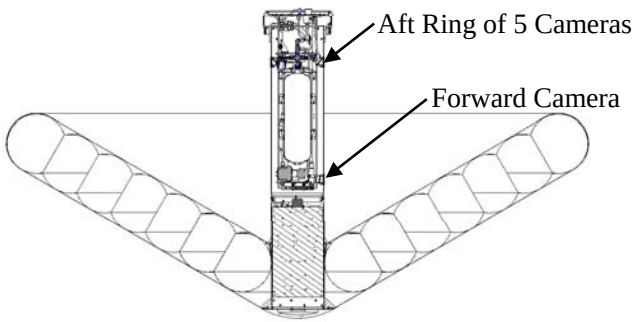

- Six $60 cameras flown in centerbody to confirm inflated shape of aeroshell
- First channel (#1) from camera mid-forward on centerbody
- Second channel (#2) from aft ring of five cameras; switches through all five before and after reentry
- Image skips when video buffer fills