Investigating the Origin and Evolution of Venus with Descent Probe Mass Spectrometry

Will Brinckerhoff
Paul Mahaffy

Planetary Environments Laboratory
Solar System Exploration Division
NASA Goddard Space Flight Center
Greenbelt, MD 20771

William.B.Brinckerhoff@nasa.gov, 301-614-6397
Paul.R.Mahaffy@nasa.gov, 301-614-6379

7th International Planetary Probe Workshop, June 14-18, 2010

Hidden Agenda:
NMS Sales Dept.

... as realized in particular by the
Venus Neutral Mass Spectrometer (NMS)

1. Background
2. Objectives
3. Description
4. Capabilities
5. Operation

Disclaimer:
Full Science Discussion Sold Separately

The BIG Picture – Mysterious Venus

- The sibling planets Venus and Earth: genetically similar but wildly different "personalities"?
- Does Venus represent a possible future state of Earth, via runaway greenhouse?
  - Isotopes of H, N, noble gases
- If Venus was different in the past, did it once have extensive water, plate tectonics, even life?
- Is Venus a model for rocky, Earth-size exoplanets? (Schaefer and Fegley, 2010)

Spitzer Image: NASA/JPL - Caltech

NOBLE GAS AND NITROGEN ABUNDANCE AND ISOTOPE SCIENCE OBJECTIVES

WHY PROBE MEASUREMENTS ?

- elemental and isotopic fractionation in inert noble gases (and nitrogen) are the best available tracers of atmospheric evolution
- terrestrial and Martian (SNC) values of noble gas abundance and fractionation are known
- there are many uncertainties and holes in the Venus noble gas measurements
- the only way to get a complete set of information on the abundance and isotopic composition of Venus atmospheric gases is to return a sample of the atmosphere or to send in an atmospheric probe

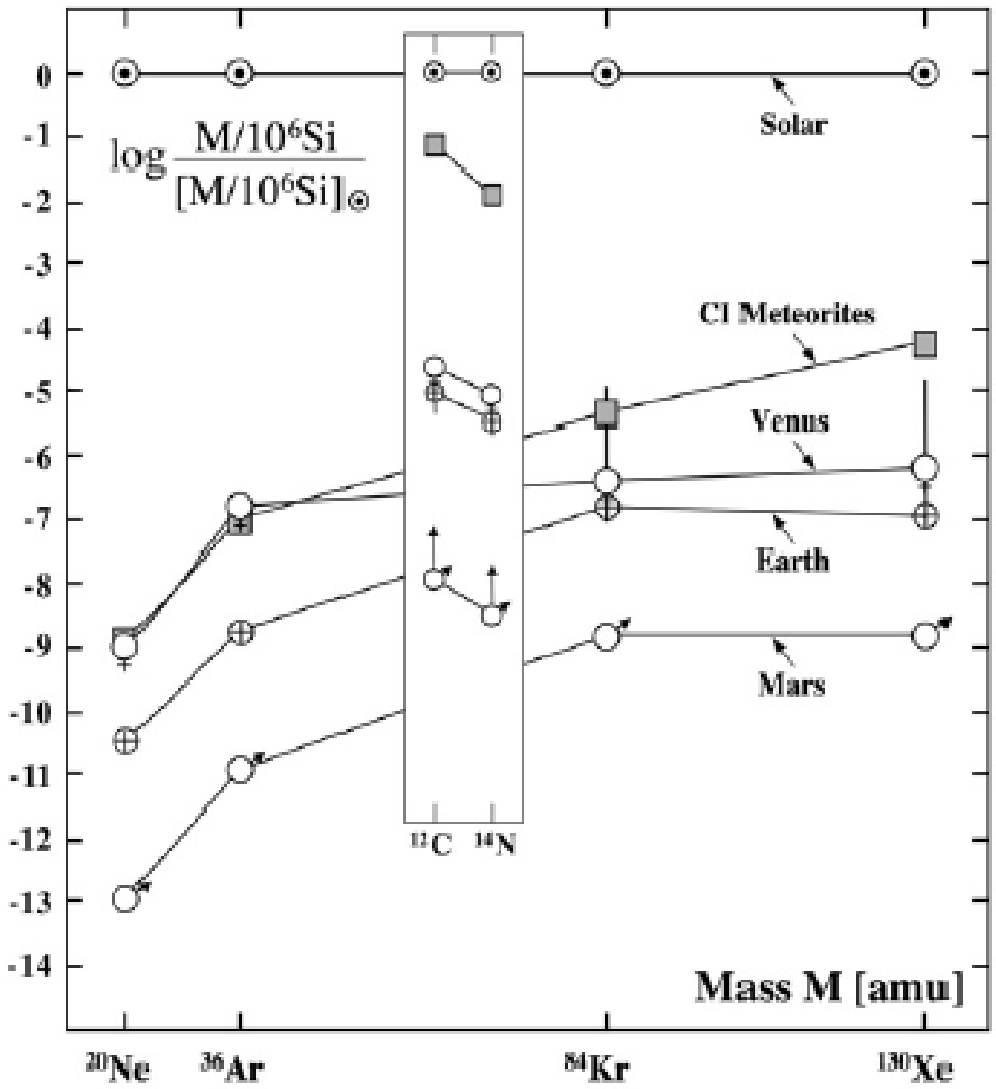

Venus Atmospheric Measurement Objectives:

Traceability to Decadal Survey, NOSSE, VEXAG, etc.

High level atmospheric science objectives

- Probe the origin and early evolution of Venus' atmosphere through analysis of inert gases
- Determine the roles of cometary impacts, degassing, and hydrodynamic escape in the evolution of volatiles on Venus
- Evaluate climatic processes (chemical cycles, cloud formation, surface interactions) through analysis of trace species

Key performance requirements:

- Noble gas (He, Ne, Ar, Kr, Xe) abundances and isotopes to ±5% or better
- CHONS isotopes to ±10% or better
  - $^{14}N/^{15}N$ in N_2 to ±10%; $\delta^{13}C$, $\delta^{18}O$ in CO_2 to ±1%; D/H in H_2O to 10%; $\delta^{34}S$ in OCS, SO_2 to ±2%
- Trace species concentrations, *vertically resolved*, in lower atmosphere
  - Top priority species: OCS, H_2S, SO_2, S_x, CO
  - Additional species: SO, SO_3, H_2O, HCl, HF, CH_4, NH_3, H_2, O_2, H_2O_2, O_3, ClO, Cl_2, NO
  - Vertical resolution of trace gases below cloud tops to within scale height (< 5 km)

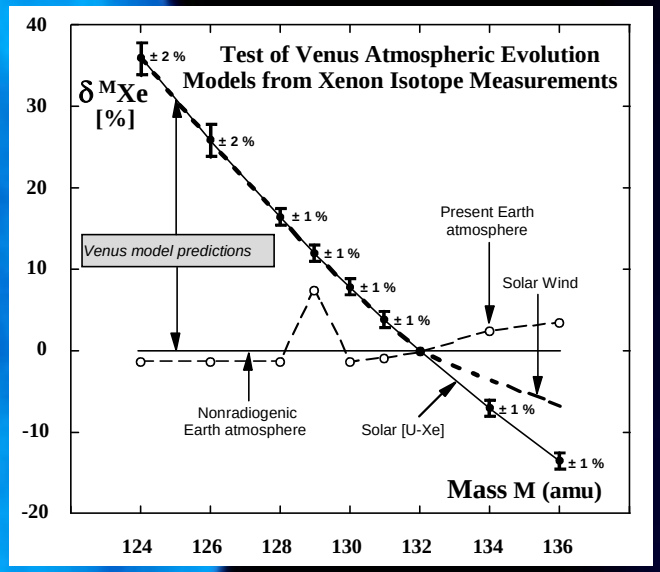

The non-radiogenic Xe composition on Venus could be solar (U-Xe)-like [20,23] or resemble the non-radiogenic terrestrial atmosphere [21,22]. The error bars show the ability of isotopic measurements with the ± 1σ precision to distinguish between the two, or to identify intermediate compositions. Solar wind-Xe (heavy dashed curve) is arguably also a candidate composition for Venus Xe. It is isotopically identical to U-Xe except for excesses, relative to U-Xe, in ^{134}Xe and ^{136}Xe. Precision of ±1% would distinguish SW-Xe from U-Xe at these isotopes. Figure adapted from Pepin, 2006 [23].

VEx/VMC Image: MPS, ESA

NOBLE GAS AND NITROGEN ABUNDANCE AND ISOTOPE SCIENCE OBJECTIVES

$^{15}N/^{14}N$ Jupiter = (2.3 ± 0.3) x 10^{-3}

Jovian ratio 63% lower than that ratio in the terrestrial atmosphere and this GPMS result may provide best estimate of protosolar $^{15}N/^{14}N$

$^{15}N/^{14}N$ Mars = 5.88 (±0.52) x 10^{-3}

may reflect fractionation loss

$N_2^+ + e \rightarrow N + N$ dissociative recombination

solar wind sputtering

hydrodynamic escape

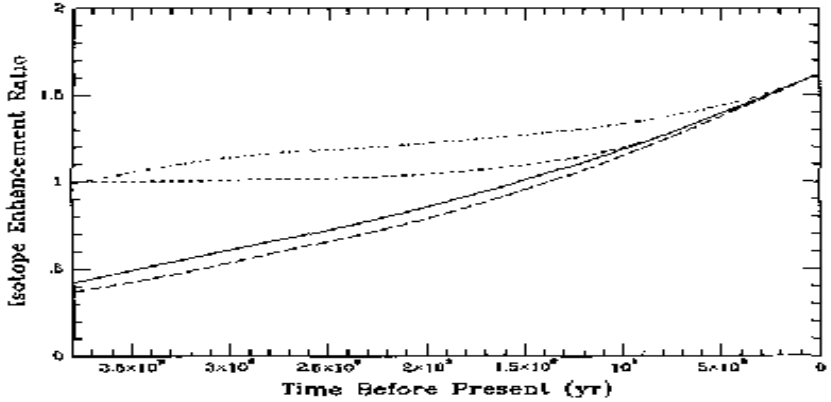

FIG. 4. Isotope enhancement ratio ($^{15}N/^{14}N$ in the bulk atmosphere divided by the current terrestrial value) as a function of time before present. The solid curve was obtained including photochemical escape alone with no dense, early atmosphere, and the short-dashed curve was obtained with an initial CO_2 atmosphere of 2 bar that is lost exponentially with a time constant of 540 Myr. The long-dashed curve includes loss of N_2 due to photochemical escape and sputtering with a current escape flux of about 2.7 × 10^4 cm^{-2} sec^{-1}; the dot–dashed curve is for the same sputtering fluxes with an initial CO_2 atmosphere of 2 bar, lost exponentially with a time constant of 670 Myr.

Much better Venus N_2 measurement needed for comparison with Earth, Mars, and the protosolar value

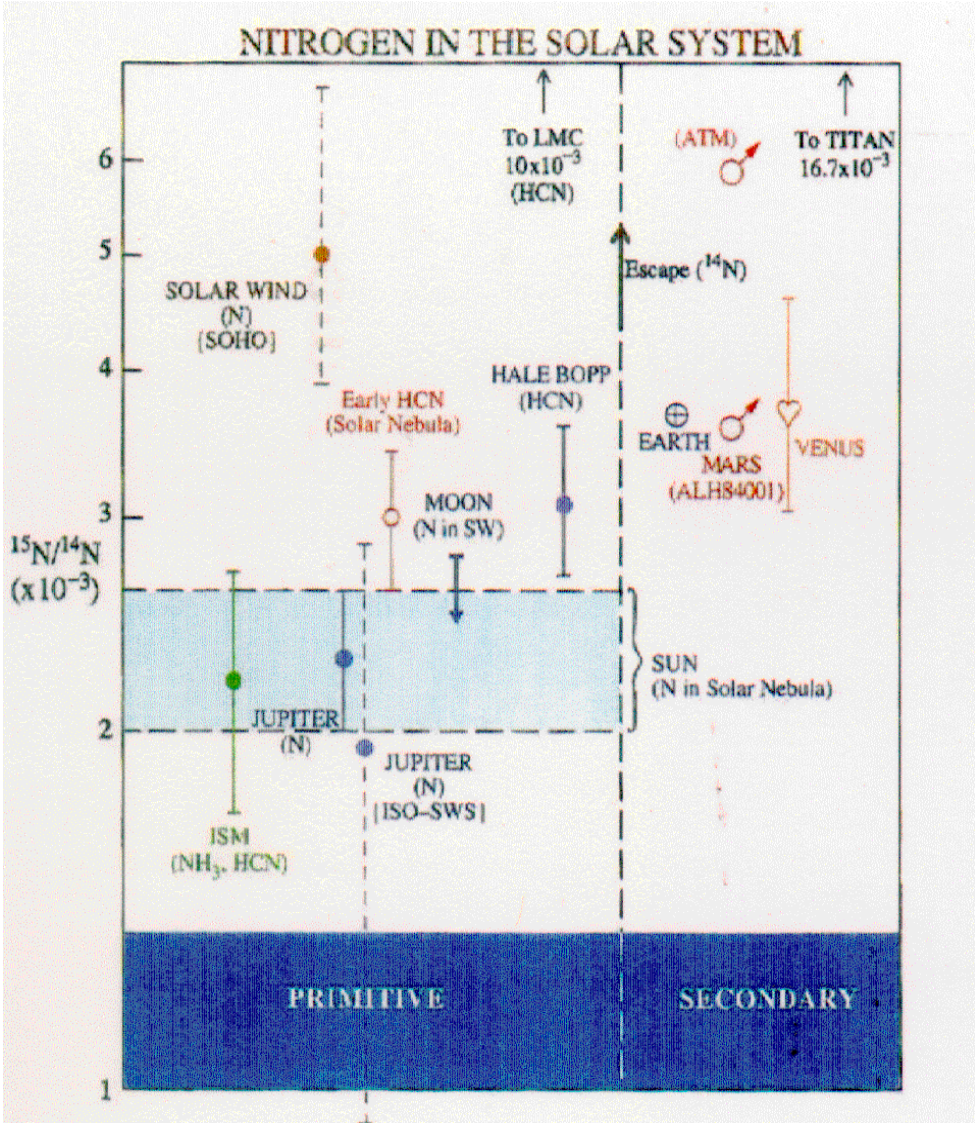

TRACE SPECIES SCIENCE OBJECTIVES

Thermochemistry and surface atmosphere chemistry at low altitudes [Fegley, Zolotov, and Lodders, ICARUS 125, 416 (1997)

$$4Fe_3O_4 \text{ (magnetite)} + O_2 = 6Fe_2O_3 \text{ (hematite)}$$

$$4FeSiO_3 \text{ (ferrosilite in pyroxene)} + O_2 = 2Fe_2O_3 \text{ (hematite)} + 4SiO_2 \text{ (silica)}$$

$$2Fe_2SiO_4 \text{ (fayalite in olivine)} + O_2 = 2Fe_2O_3 \text{ (hematite)} + 2SiO_2 \text{ (silica)}.$$

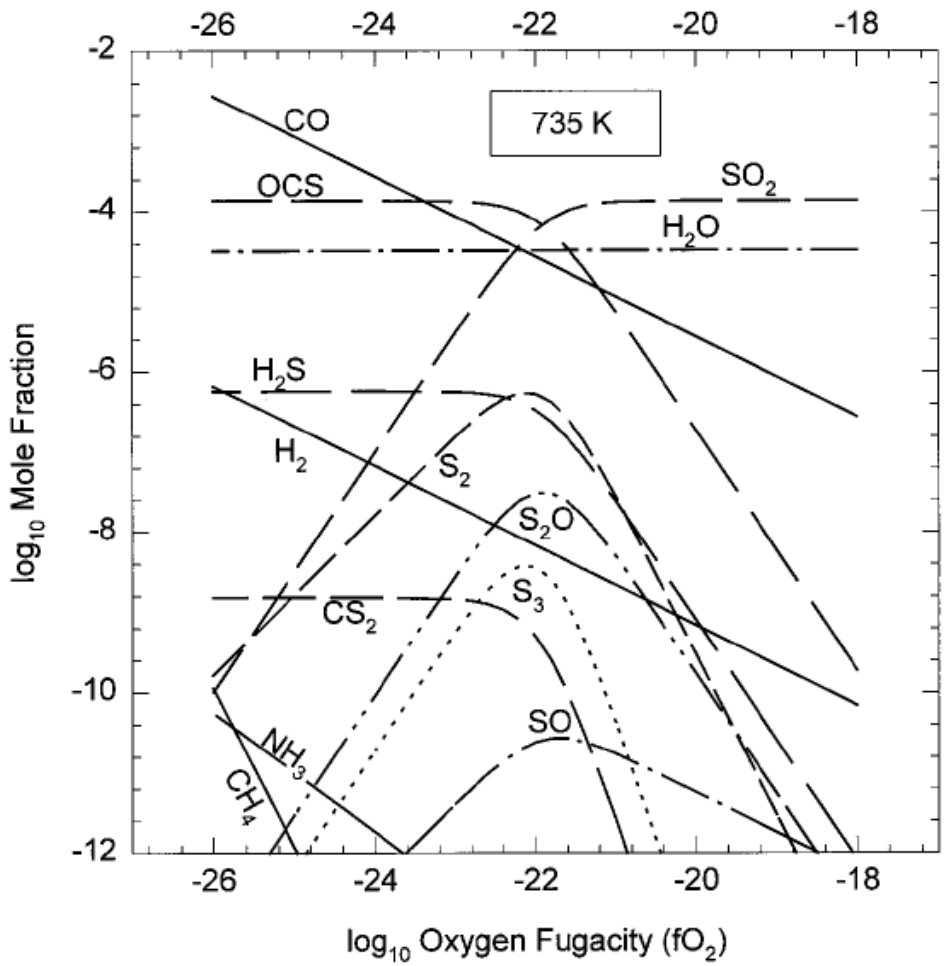

FIG. 1. Calculated equilibrium gas mole fractions as a function of oxygen fugacity at 735.3 K (0 km). Spectroscopic observations or *in situ* measurements of SO_2, OCS, CO, H_2S, S_2, CH_4, NH_3, and H_2 can constrain the redox state of the near-surface atmosphere of Venus because the concentrations of these gases are sensitive functions of the oxygen fugacity.

NMS NOTIONAL MODEL

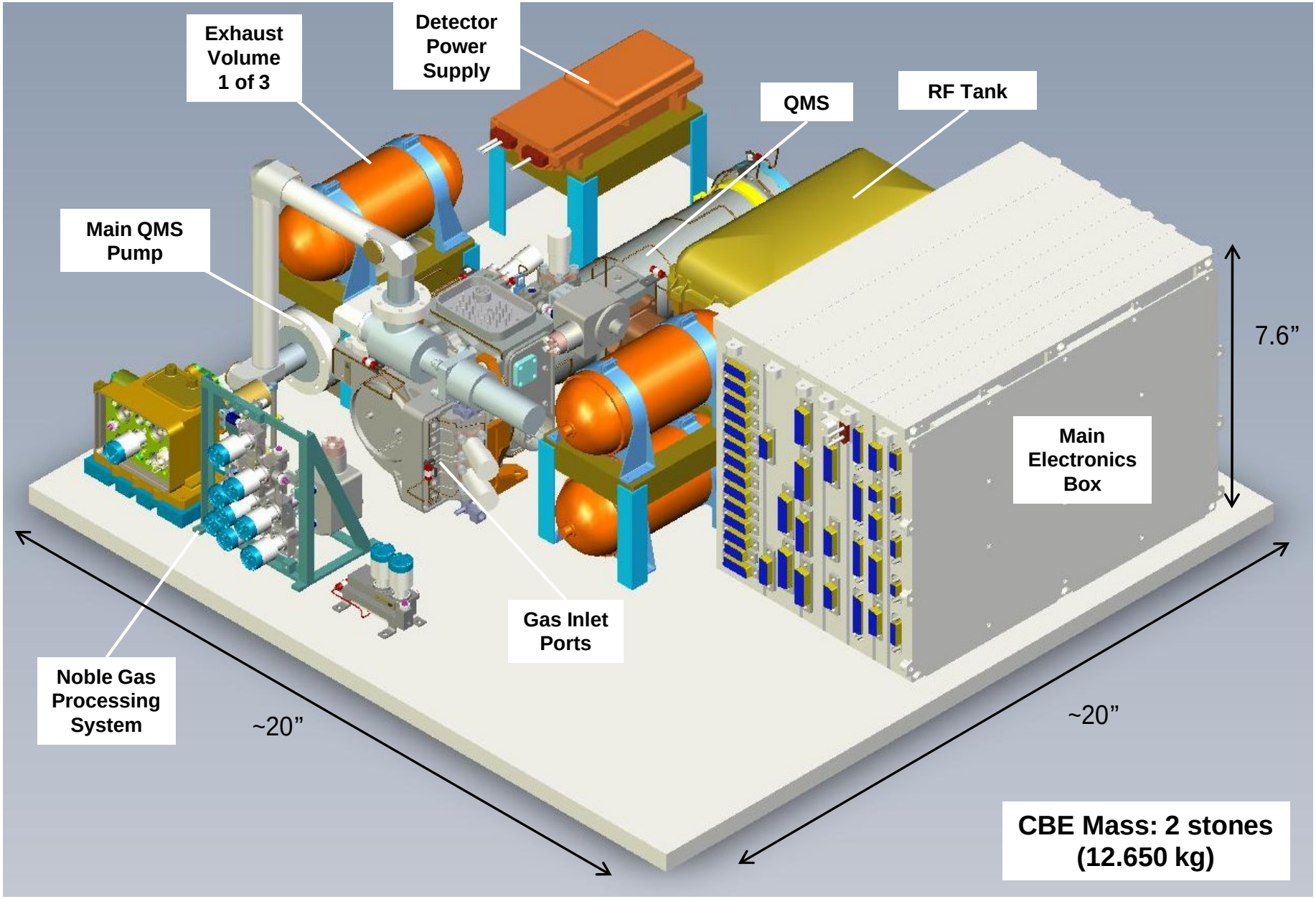

NMS GAS FLOW CONFIGURATION

Inlet 1 → direct sampling of atmosphere from highest possible altitude to cloud deck.

Gas Processing System → ingests gas above cloud deck and provides measurements of first nitrogen, neon, and argon isotopes and subsequently of krypton and xenon abundances and isotopes

Inlet 2 → direct sampling of atmosphere initiated after noble gas measurements are complete to after probe touchdown

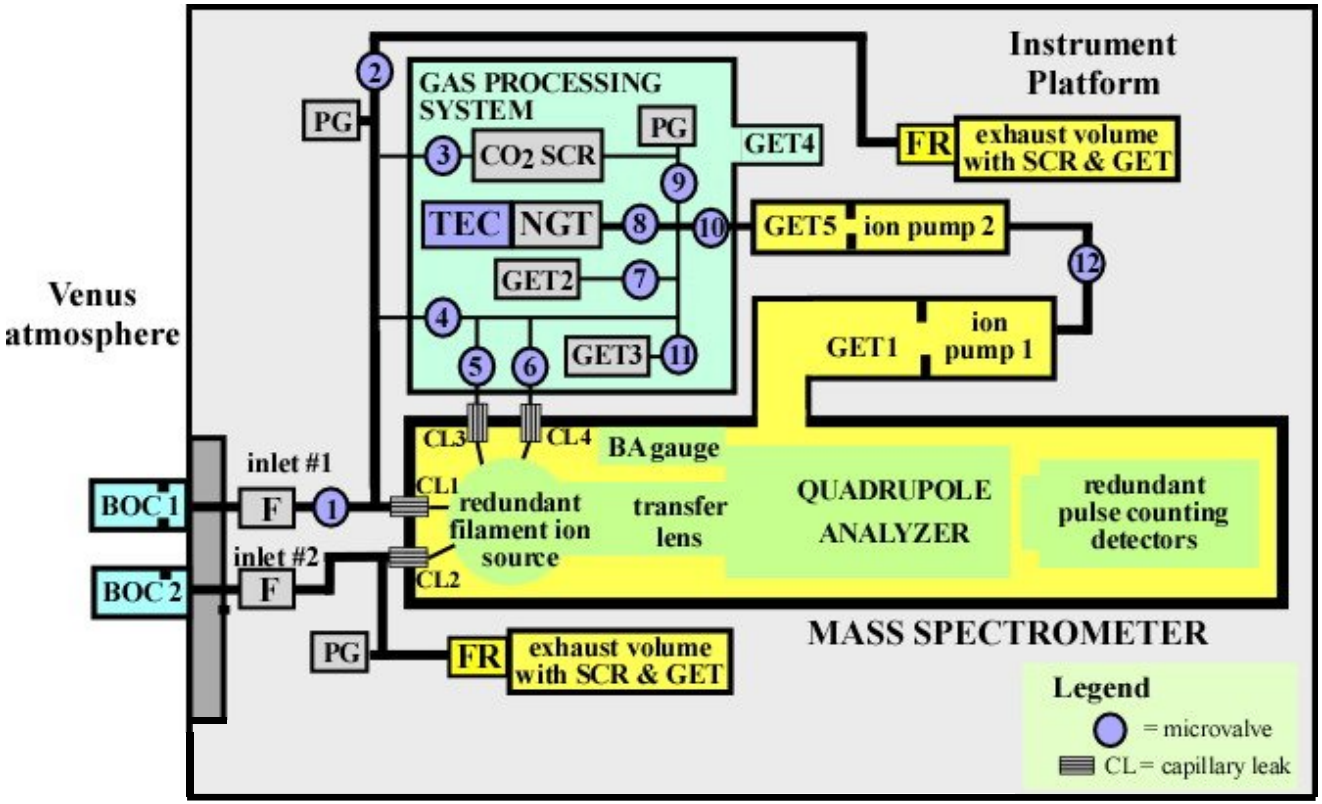

Many elements of either VMS or VMS + TLS either identical or derived from components of the MSL Sample Analysis at Mars (SAM) instrument suite.

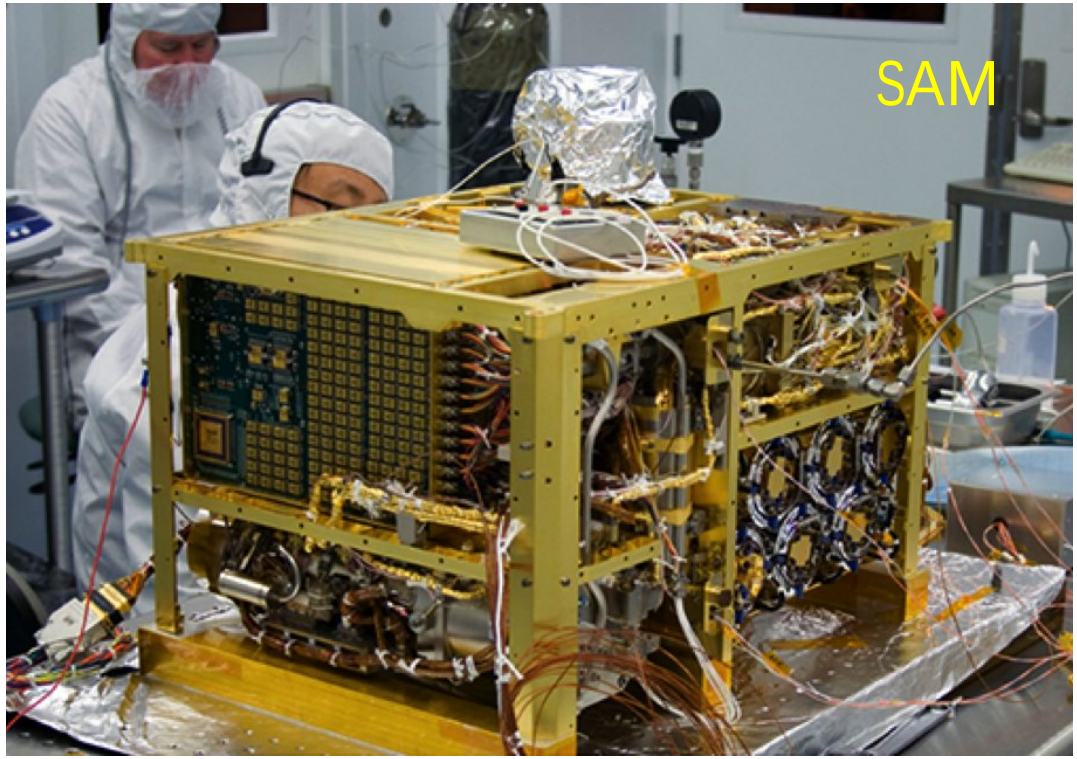

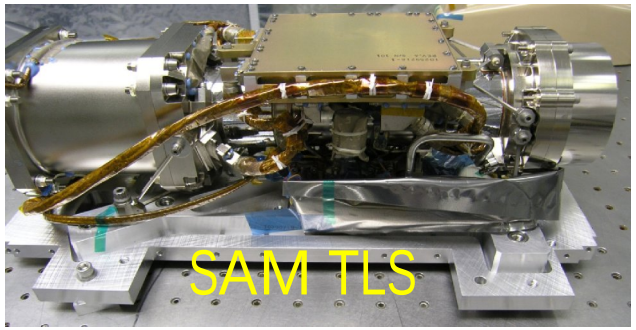

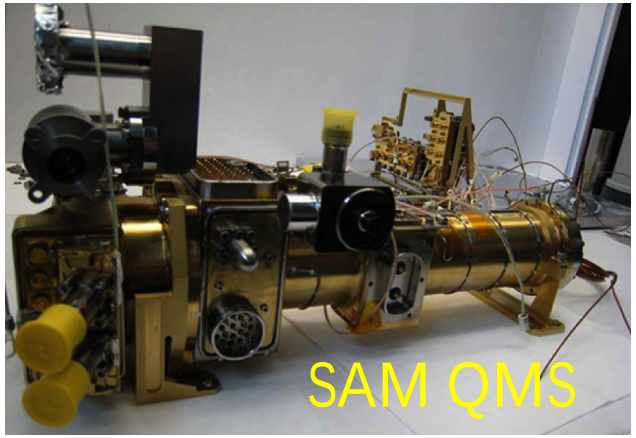

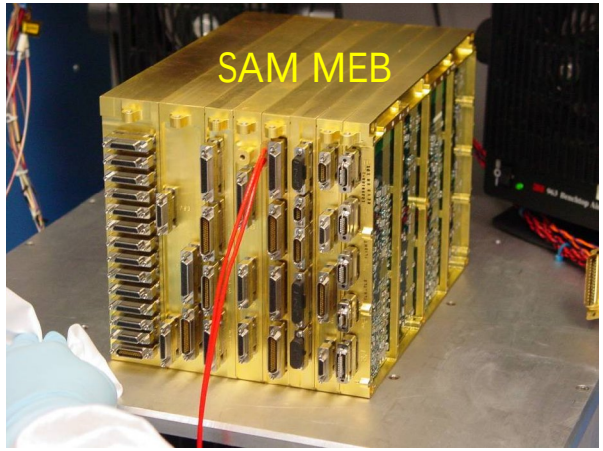

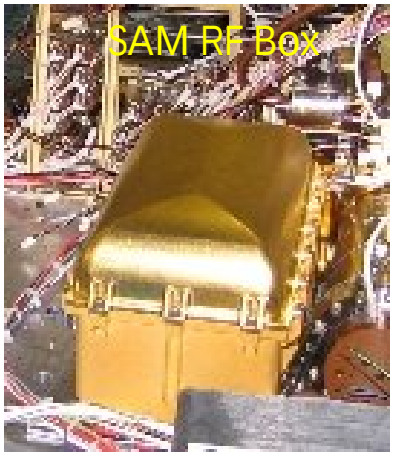

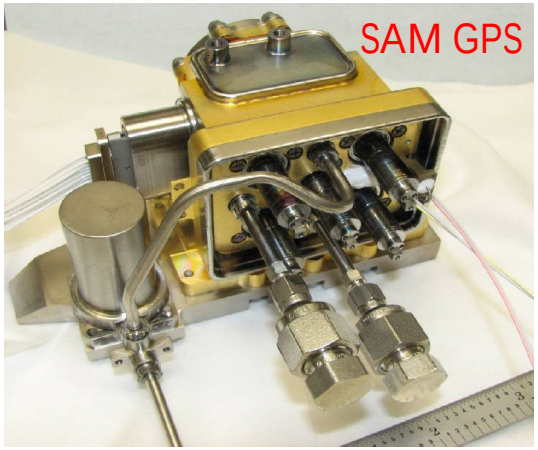

NMS instrument parameters and electrical diagram

Parameter	Characteristics
Mass Analyzer	Quadrupole 2–550 Da, arbitrary mass value steps, integer, or 0.1-amu scans
Direct Inlet System	glass capillary array direct leak, microvalves
Noble Gas and Nitrogen Gas Processing System	CO_2 chemical trap, active gas getter, Kr and Xe trap, glass capillary array, microvalves
Ion Source	Redundant thermionic emission electron gun (75eV)
Ion Detector	Redundant secondary electron multiplier/pulse counters with 10^8 dynamic range, 10^{-6} abundance sensitivity, 30 ms integration time
Viewing Requirements	Sample inlet tube extending several cm from gondola platform to minimize contamir. outer probe shell
Deploy Mechanism	Metal ceramic break-off cap, pyrotechnically actuated
Pumps	Non-evaporable getters, chemical CO2 scurbbers and ion pump

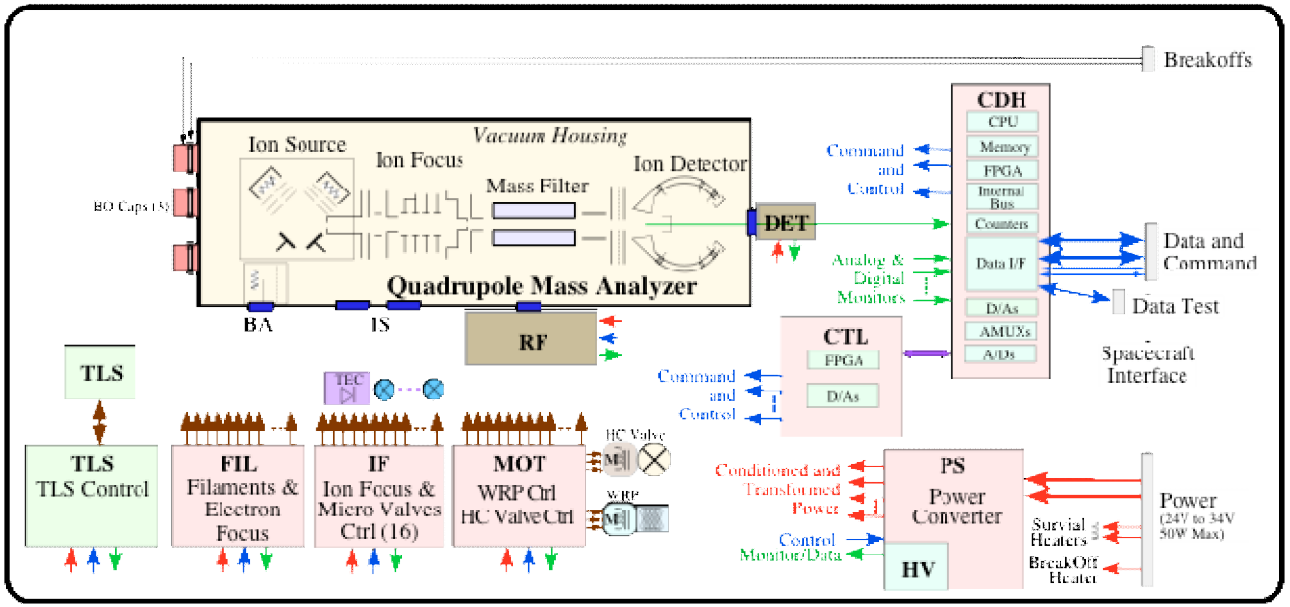

QMS: RF controller and quadrupole analyzer from SAM GCMS, Galileo Probe MS, Huygens GCMS etc.
QMS Main Pump: baseline: ion pump plus chemical getter (qualified to 400 G on Galileo); improved performance with turbomolecular pumps (MSL) but TBQ @ high G
GPS operational scenario (note similarity/differences from Galileo GPMS) :

- CO_2 chemically removed in GPS by reaction $CaO(s) + CO_2 \rightarrow CaCO_3(s)$
- After nitrogen measurements gas sample purified by getter to remove all remaining reactive gases.
- Residual noble gases flow through cooled enrichment cell packed with a high surface area adsorbent chosen to adsorb krypton and xenon (cooling via thermoelectric cooler TEC identical to that developed for SAM to maintains cell at –60°C for a short period)
- After analysis of helium, neon, and argon these gases pumped from the GPS
- Trapped xenon and krypton are thermally released back into the cell and analyzed by the mass spectrometer in STATIC MS mode with high conductance valve closed and GET1 (chemical getter) pumping active gases. STATIC MS is needed to secure stated accuracy for noble gas measurements.

NMS and NMS+TLS measurement capabilities in context

Measurement Objectives For Venus Noble Gases & Nitrogen

Gas Species	Mixing Ratio (PV)	NMS Uncertainty	NMS Isotope Ratios	PV Value [atom/atom]	NMS Uncertainty
N_2	0.035±0.8%	≤10%	$^{15}N/^{14}N$	0.00383±20	≤1%
^{4}He	0.6-12.0 ppm	≤5%	$^{3}He/^{4}He$		≤10%
^{20}Ne	9±3 ppm	≤10%	$^{22}Ne/^{20}Ne$	0.085±6%*	≤1%
			$^{21}Ne/^{20}Ne$	unmeasured	≤1%
^{36}Ar	30±15 ppm	≤10%	$^{38}Ar/^{36}Ar$	0.18±11%	≤1%
^{40}Ar	40±15 ppm	≤10%			
^{84}Kr	7-28 ppb	≤10%	$\delta^{78}Kr$, $\delta^{80}Kr$, $\delta^{82}Kr$, $\delta^{83}Kr$, $\delta^{86}Kr$	unmeasured	≤1%
^{132}Xe	0.5-2.5 ppb	≤25%	$\delta^{124}Xe$, $\delta^{126}Xe$	unmeasured	≤2%
			$\delta^{128}Xe$, $\delta^{129}Xe$, $\delta^{130}Xe$, $\delta^{131}Xe$, $\delta^{134}Xe$, $\delta^{136}Xe$	unmeasured	≤1%

* also from Venera 13-14

NMS and NMS+TLS measurement capabilities in context

Measurement Objectives For Venus Isotope Ratios

Isotope Ratio	Gas Species	Previous Measurements		Uncertainty NMS [+TLS]
		Ratio	Method	
D/H	H_2O	0.016±0.002	PVLP-MS	5-10% [<1%]
		0.019±0.006	V11-12/MS	
$^{12}C/^{13}C$	CO_2	88.3±1.6	V11-12/MS	1-2% [<1%]
		86±12	IR Spec CO_2	
$^{16}O/^{18}O$	CO_2	500±25	PVLP-MS	1-2% [<0.1%]
		500±80	IR Spec CO_2	
$^{14}N/^{15}N$	N_2	273±56	PVLP-MS	1-2%
$^{35}Cl/^{37}Cl$	Cl_2	2.9±0.3	IR Spec HCl	TBD
$^{32}S/^{34}S$	SO_2, OCS, S_n	None (expect ~0.0443)		<2% [<0.2%]

PVLP-MS= Pioneer Venus Large Probe Mass Spectrometer
V11-12/MS= Venera 11 and 12 Mass Spectrometers
IR Spec CO_2 = Earth-based infra-red spectroscopy of CO_2
IR Spec HCl= Earth-based infra-red spectroscopy of HCl

NMS and NMS+TLS measurement capabilities in context

Measurement Objectives For Venus Reactive Gases

Gas Species	Previous Measurements			Uncertainty NMS [+TLS]
	Concentration	Altitude	Method	
H_2O	30±15 ppm	0-45 km	PV, VenSP, GalR, EBIR	<25% [<5%]
	30-70 ppm	0-5 km		
SO_2	150±30 ppm	22-42 km	PV, VenGC, VegUV, EBIR	<10%
	25-150 ppm	12-22 km		
OCS	4.4±1 ppm	33 km	EBIR	<25% [<2%]
H_2S	±2 ppm (?)	< 20 km	PV	<25%
H_2SO_4	(present)	clouds	EBIR	*
S_n (n=1-8)	20 ppb	< 50 km	VenGC	*
HCl	0.6±0.12 ppm	cloud top	EBIR	*
	0.5 ppm	35-45 km		
Cl_2, SO_2Cl_2, SO_3, NO, NH_3	unknown			*

* not specified/best effort.

PV=Pioneer Venus Large Probe Mass Spectrometer, VenSP =Venera 11-14 Spectrophotometer, GalR = Galileo IR, VenGC = Venera 11-12 Gas Chromatograph, VegUV = Vega UV Spectrometer, EBIR = Earth-based IR,

NMS GAS FLOW CONFIGURATION

Inlet 1 → direct sampling of atmosphere from highest possible altitude to cloud deck.

Gas Processing System → ingests gas above cloud deck and provides measurements of first nitrogen, neon, and argon isotopes and subsequently of krypton and xenon abundances and isotopes

Inlet 2 → direct sampling of atmosphere initiated after noble gas measurements are complete to after probe touchdown

Min 0-8 (~64-45 km)

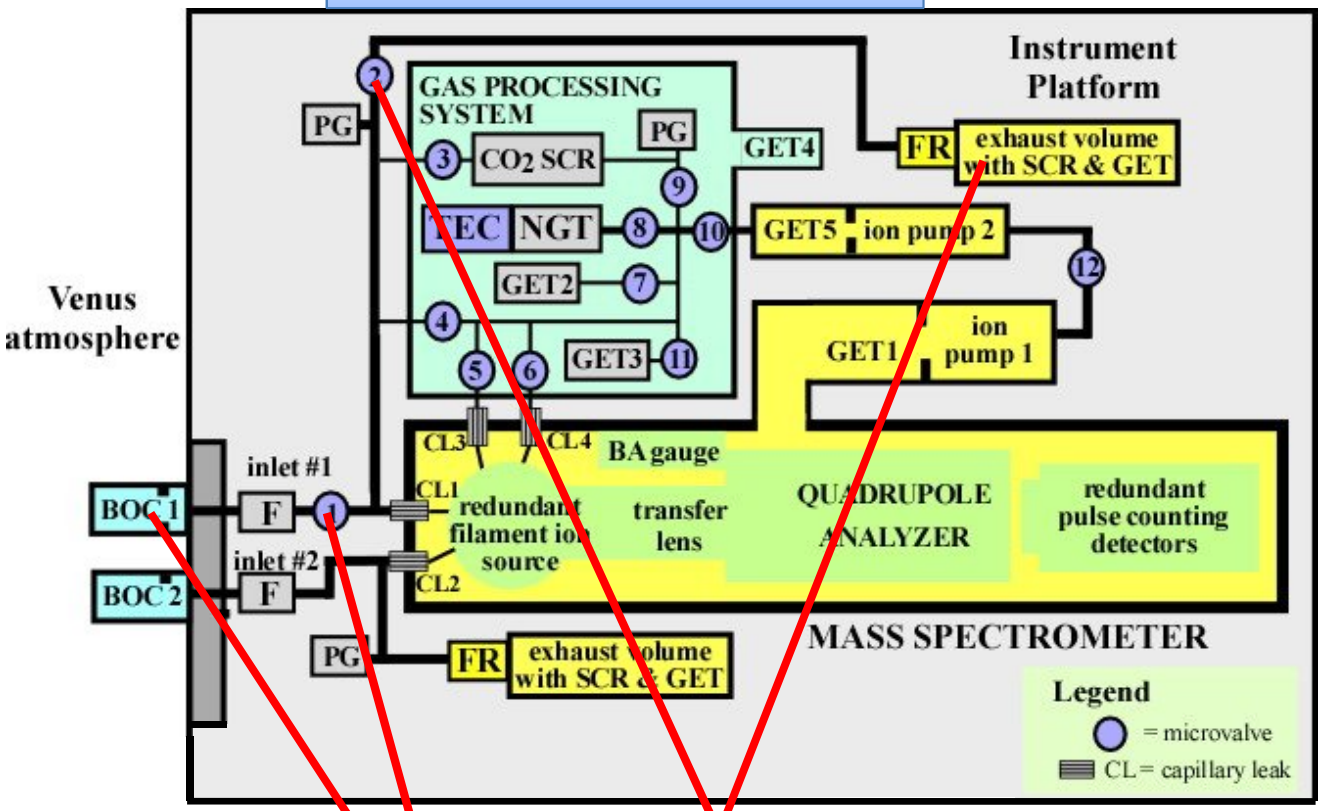

1. Initialize: Open BOC1, V1, V2 shortly after AE for well-mixed flow-restricted gas in manifold split between direct capillary leak to QMS and Line 1 exhaust + getter

NMS GAS FLOW CONFIGURATION

Inlet 1 → direct sampling of atmosphere from highest possible altitude to cloud deck.

Gas Processing System → ingests gas above cloud deck and provides measurements of first nitrogen, neon, and argon isotopes and subsequently of krypton and xenon abundances and isotopes

Inlet 2 → direct sampling of atmosphere initiated after noble gas measurements are complete to after probe touchdown

Min 8-10 (~45-40 km)

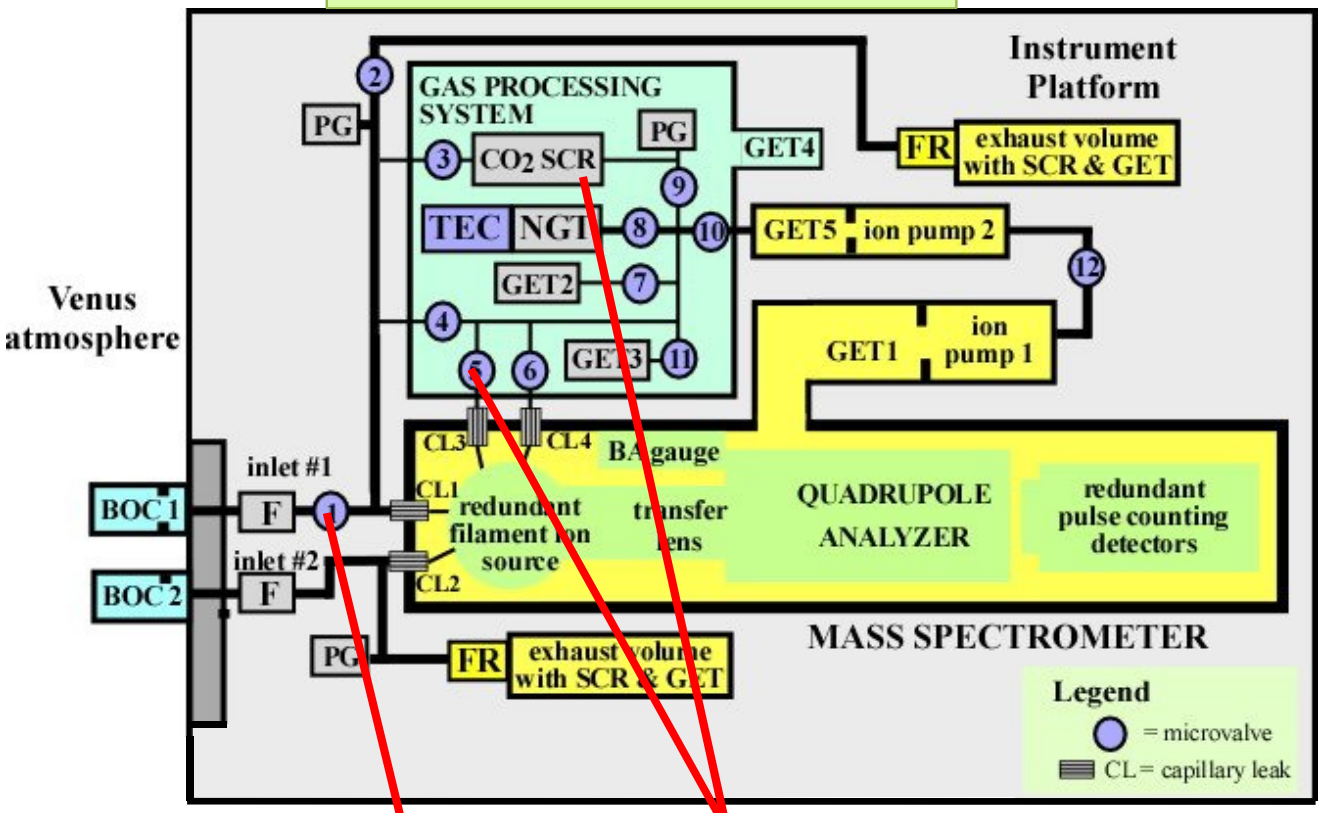

2. Nitrogen: Fill GPS CO_2 scrubber volume (V3 to V9). Pump away remaining GPS incl. Inlet 1 leak region with HCV closed, through V10. Close V1, open V9 and V5 and admit scrubbed gas to QMS.

NMS GAS FLOW CONFIGURATION

Inlet 1 → direct sampling of atmosphere from highest possible altitude to cloud deck.

Gas Processing System → ingests gas above cloud deck and provides measurements of first nitrogen, neon, and argon isotopes and subsequently of krypton and xenon abundances and isotopes

Inlet 2 → direct sampling of atmosphere initiated after noble gas measurements are complete to after probe touchdown

Min 10-15 (~40-35 km)

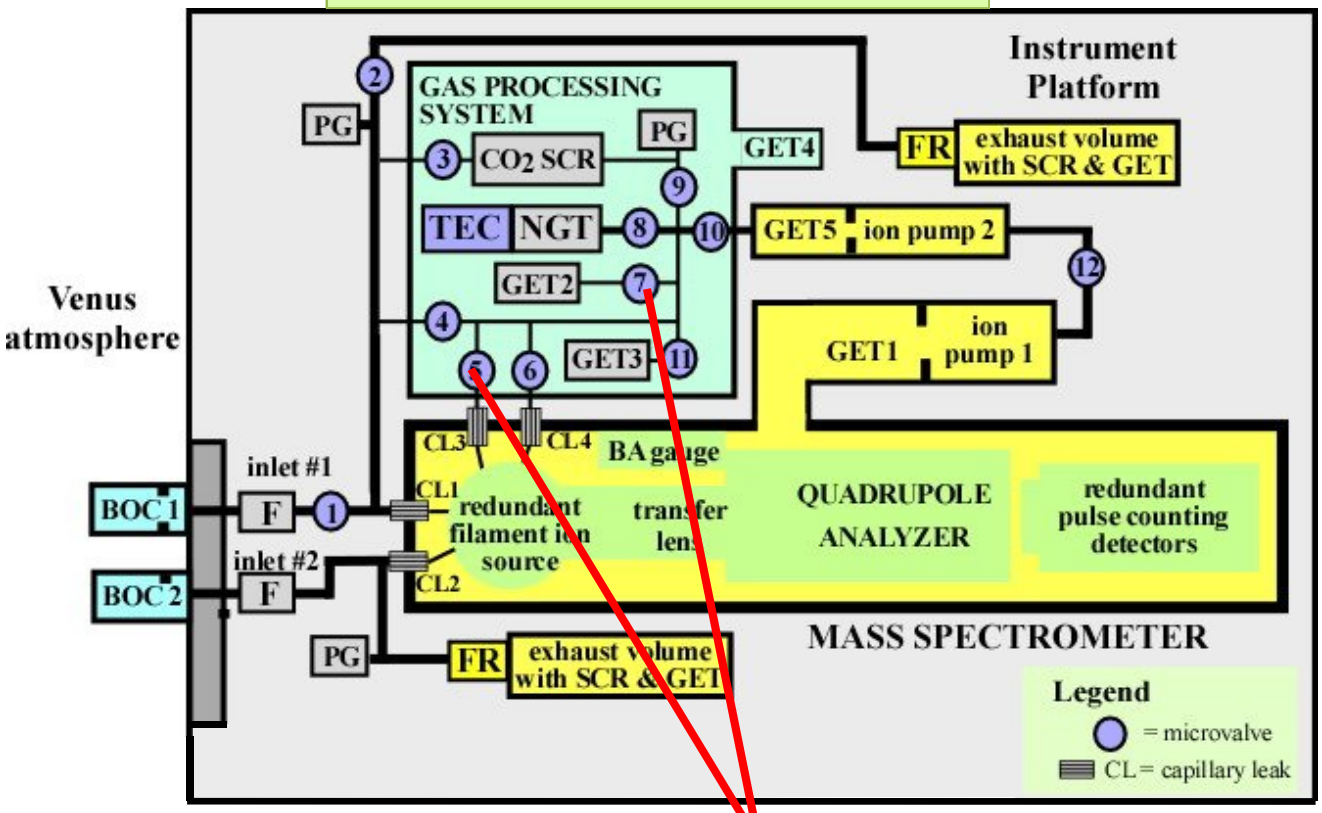

3. Ne, Ar: Close V5 and open V7 to remove all N2 with getter. Admit remaining Ne, Ar-rich gas to QMS (V5) up to BA-pressure trigger level to measure Ne, Ar.

NMS GAS FLOW CONFIGURATION

Inlet 1 → direct sampling of atmosphere from highest possible altitude to cloud deck.

Gas Processing System → ingests gas above cloud deck and provides measurements of first nitrogen, neon, and argon isotopes and subsequently of krypton and xenon abundances and isotopes

Inlet 2 → direct sampling of atmosphere initiated after noble gas measurements are complete to after probe touchdown

Min 15-18 (~35-30 km)

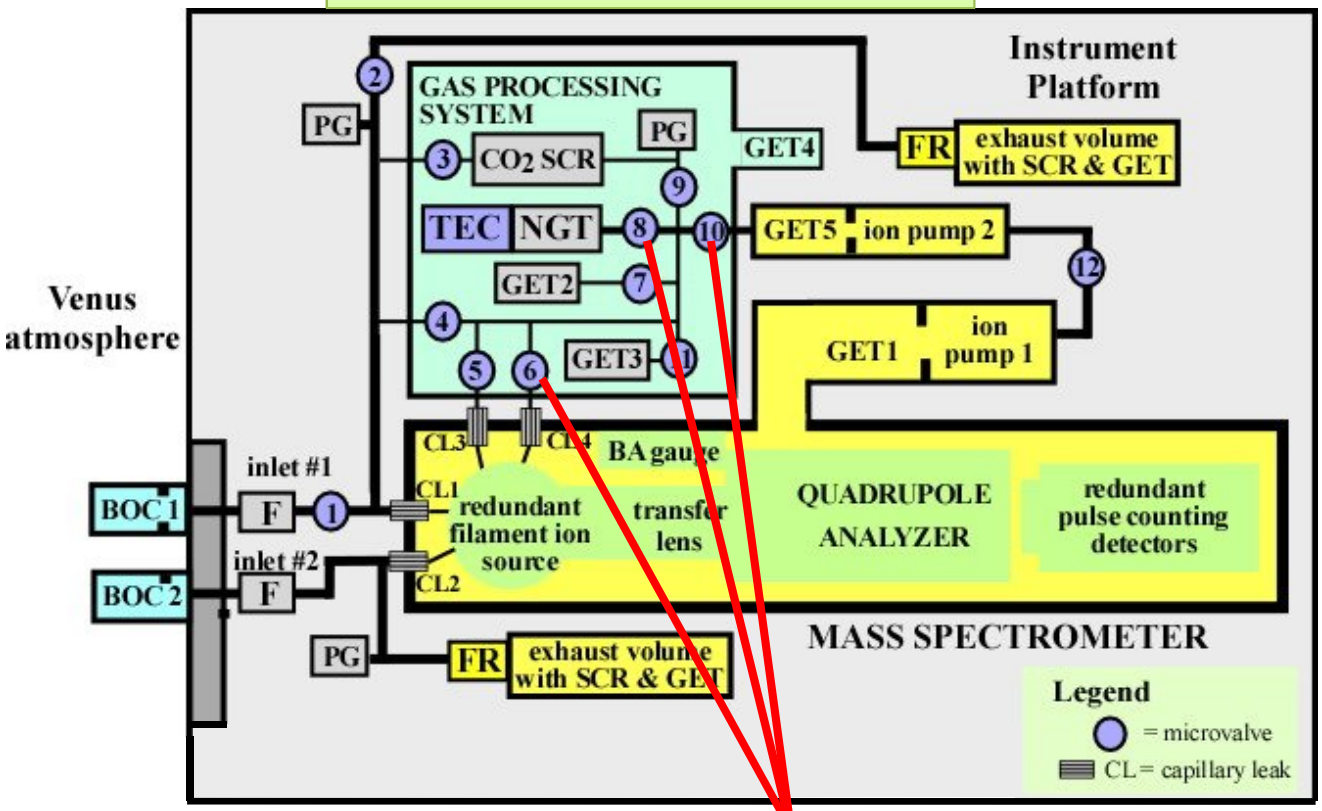

4. Kr, Xe: Open V8 for TBD sec to trap heavy noble gases. Close V8 and pump away Ne, Ar (V10). Close V10, reopen V8, release Kr, Xe to QMS via V5/6. Up to 10 minutes total for all noble gas measurements.

NMS GAS FLOW CONFIGURATION

Inlet 1 → direct sampling of atmosphere from highest possible altitude to cloud deck.

Gas Processing System → ingests gas above cloud deck and provides measurements of first nitrogen, neon, and argon isotopes and subsequently of krypton and xenon abundances and isotopes

Inlet 2 → direct sampling of atmosphere initiated after noble gas measurements are complete to after probe touchdown

Min 18-48 (~30-0 km)

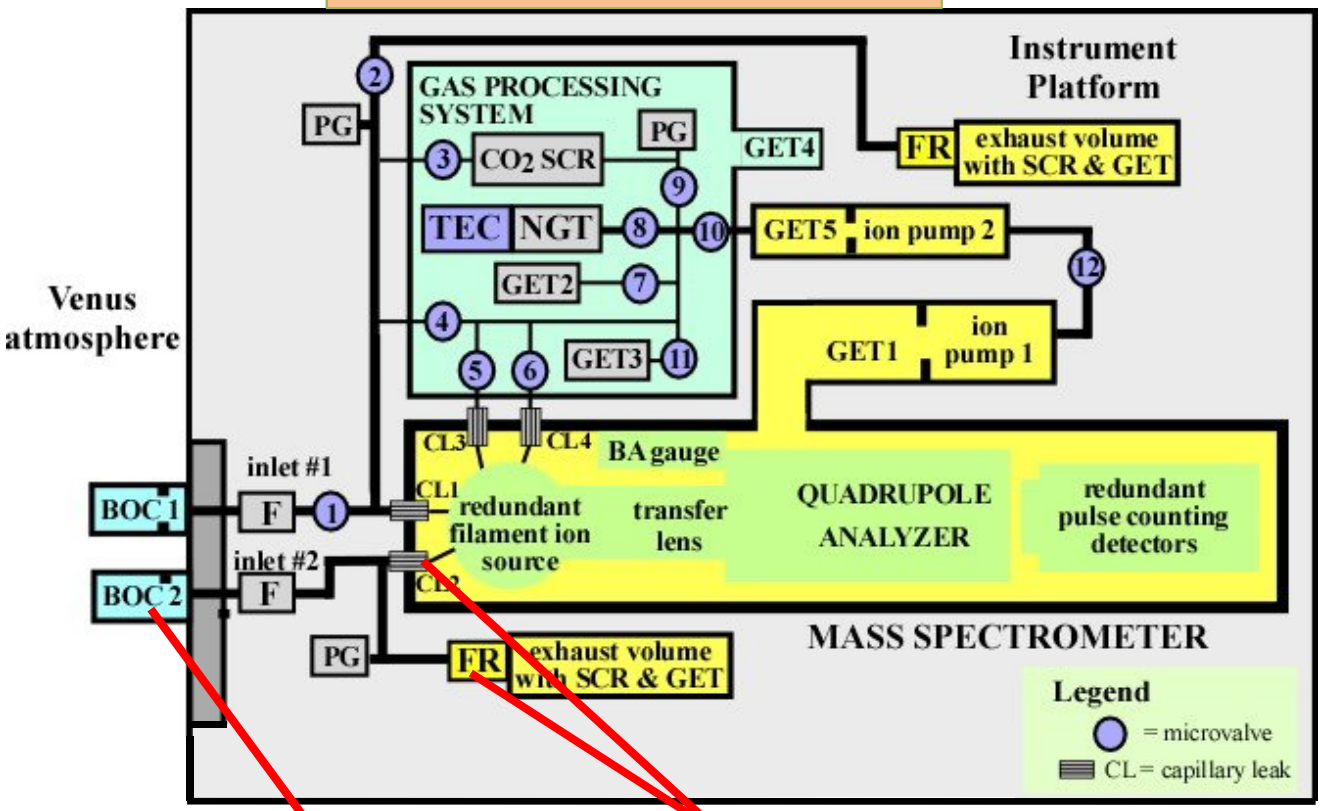

5. Trace Gases: Open BOC 2 at TBD altitude below clouds. Continuous direct Inlet 2 leak operations with scans focused on key species as function of altitude to surface + post-landing.

NMS+TLS GAS FLOW CONFIGURATION

Inlet 1 → VMS direct sampling of atmosphere from highest possible altitude to cloud deck.

Gas Processing System → ingests gas above cloud deck and provides measurements of first nitrogen, neon, and argon isotopes and subsequently of krypton and xenon abundances and isotopes

Inlet 2 → VMS direct sampling of atmosphere initiated after noble gas measurements are complete to after probe touchdown

Inlet 3 → TLS direct sampling of atmosphere initiated after noble gas measurements are complete to after probe touchdown

Min 18-48 (~30-0 km)

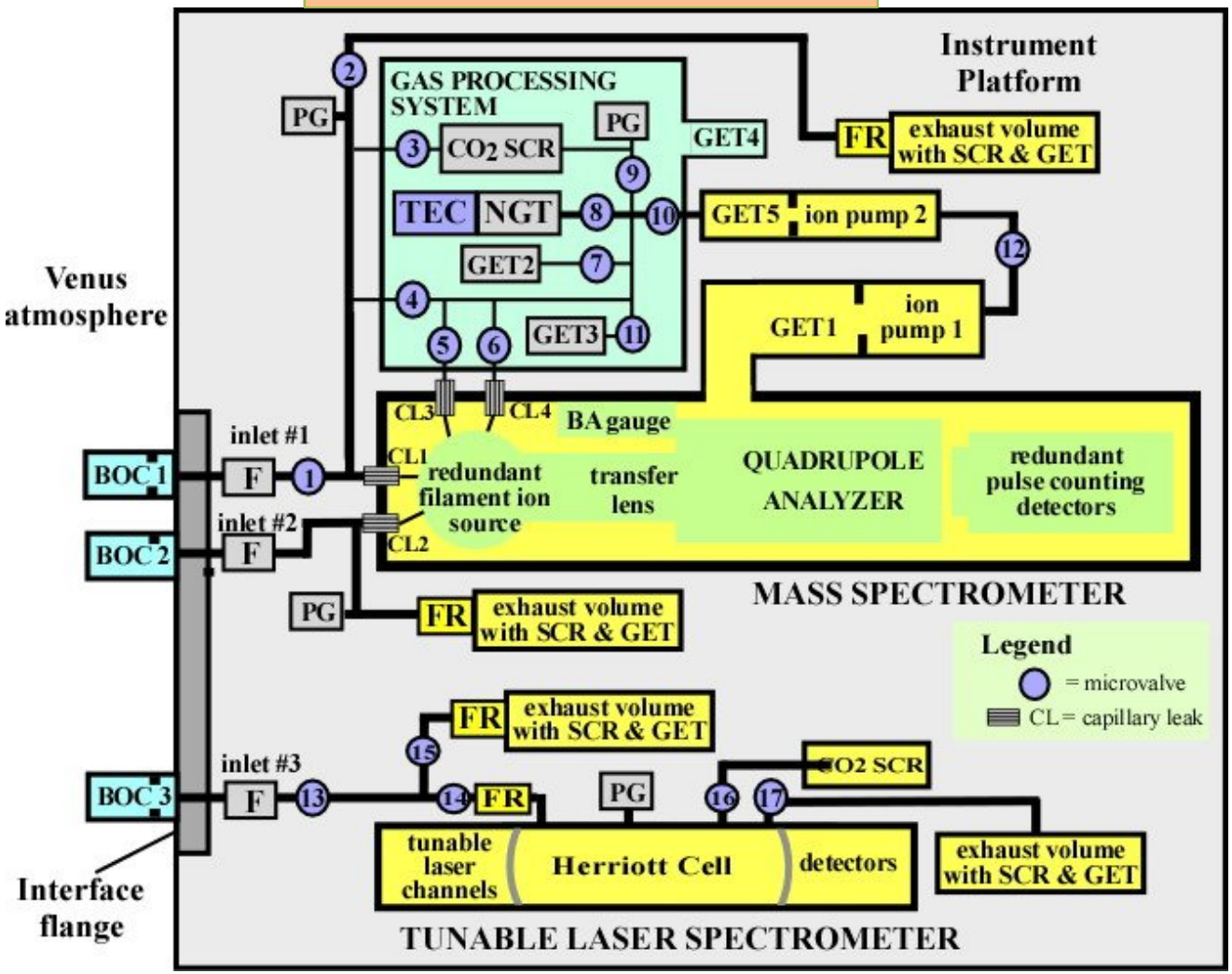

Probe Flange and BOC Design Example

- Inlets require pyrotechnic breakoff to maintain high vacuum prior to entry
- Flange seal must remain leak free during descent

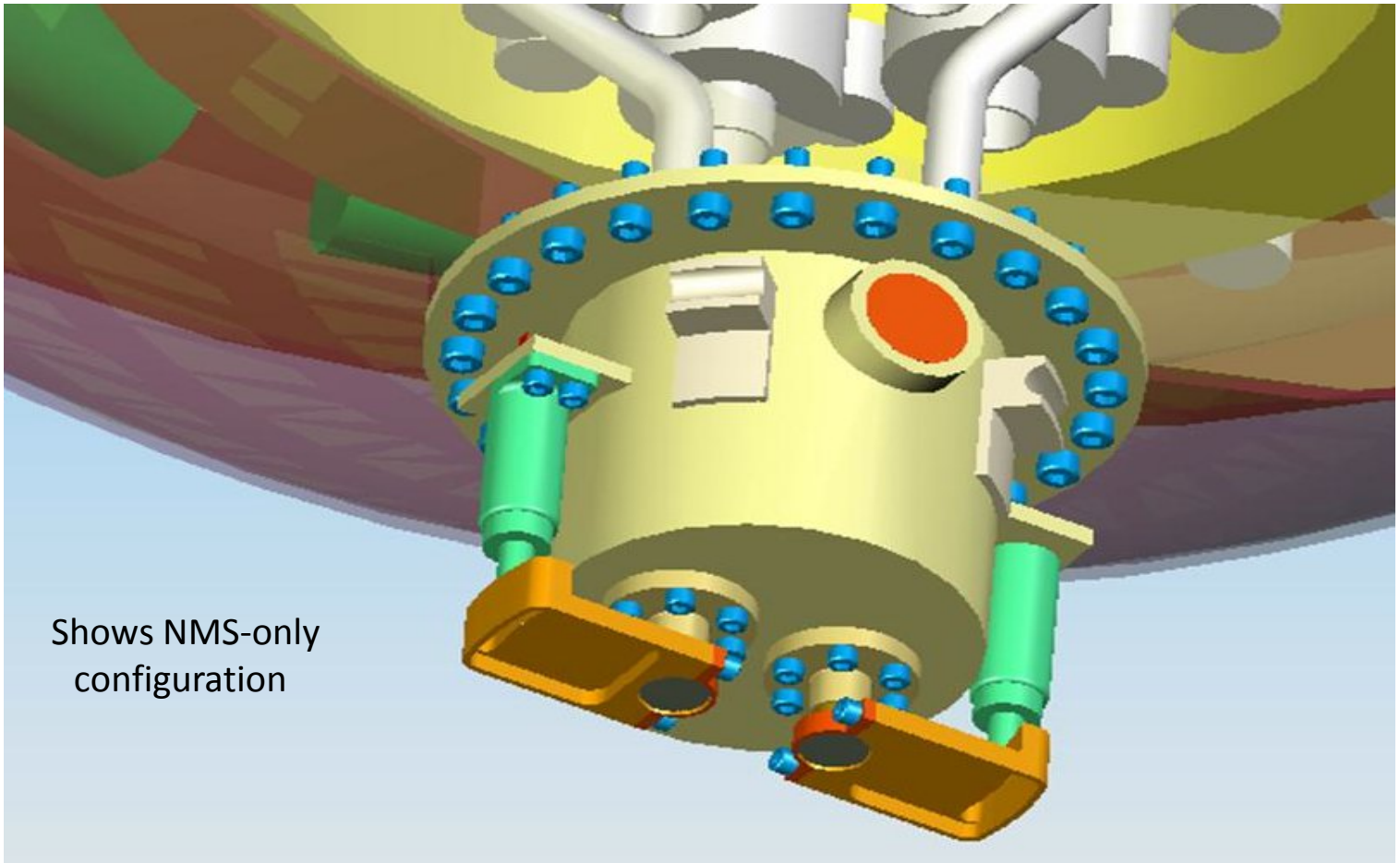

Examples from noble and not so noble gases using the SAM FM

Example of measurement from SAM FM calibration on rapidly changing SO_2 signal from melanterite gas evolution. Solid line is nominal 0.4428 ratio

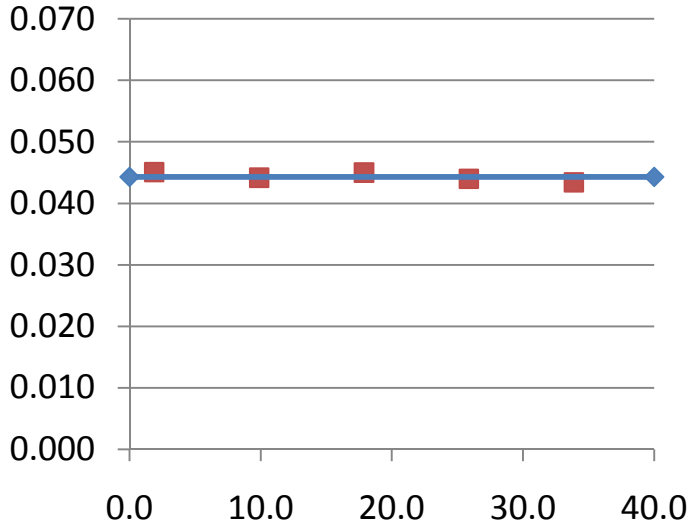

Average $^{34}S/^{32}S$ from 68 Da to 66 Da = 0.4432
Std deviation = 1.57 %
Total measurement time 0.17 sec

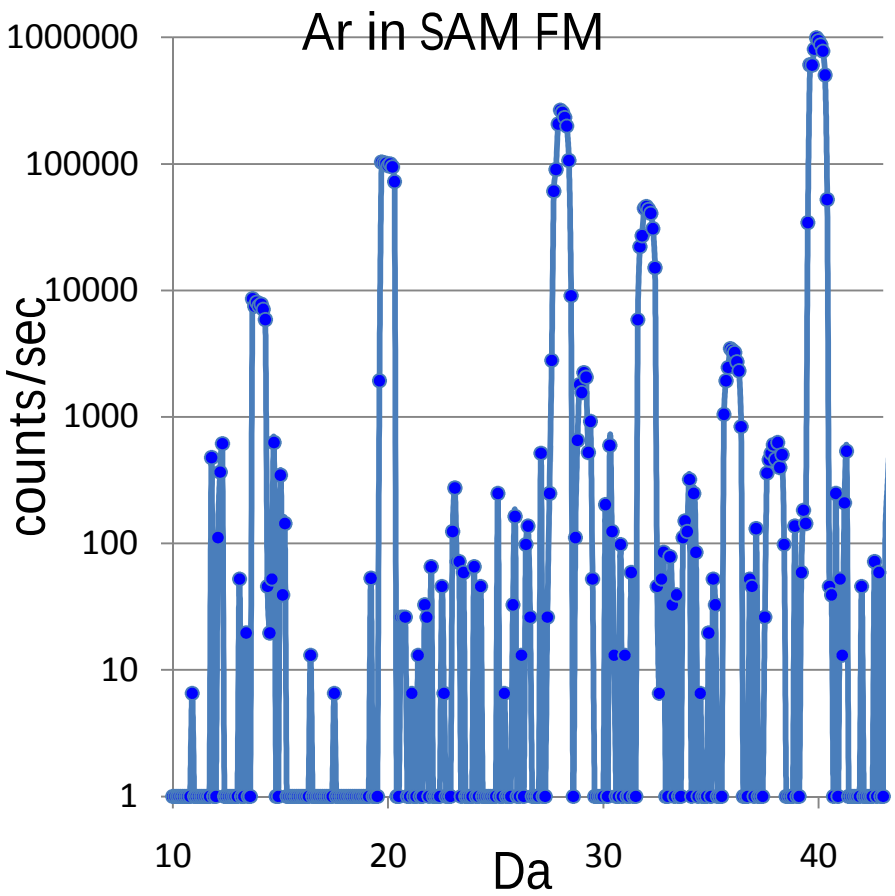

SAM QMS measured
$^{36}Ar/^{40}Ar$ = 0.00343
(nominal 0.00341)
Integration time 3.8 sec
On ^{40}Ar, ^{36}Ar and bkg.

Xe and Kr measured in pulse counting mode on the SAM FM in static MS mode.
Scan illustrated is 0.1 Da mode.
Crosstalk between adjacent masses <100,000

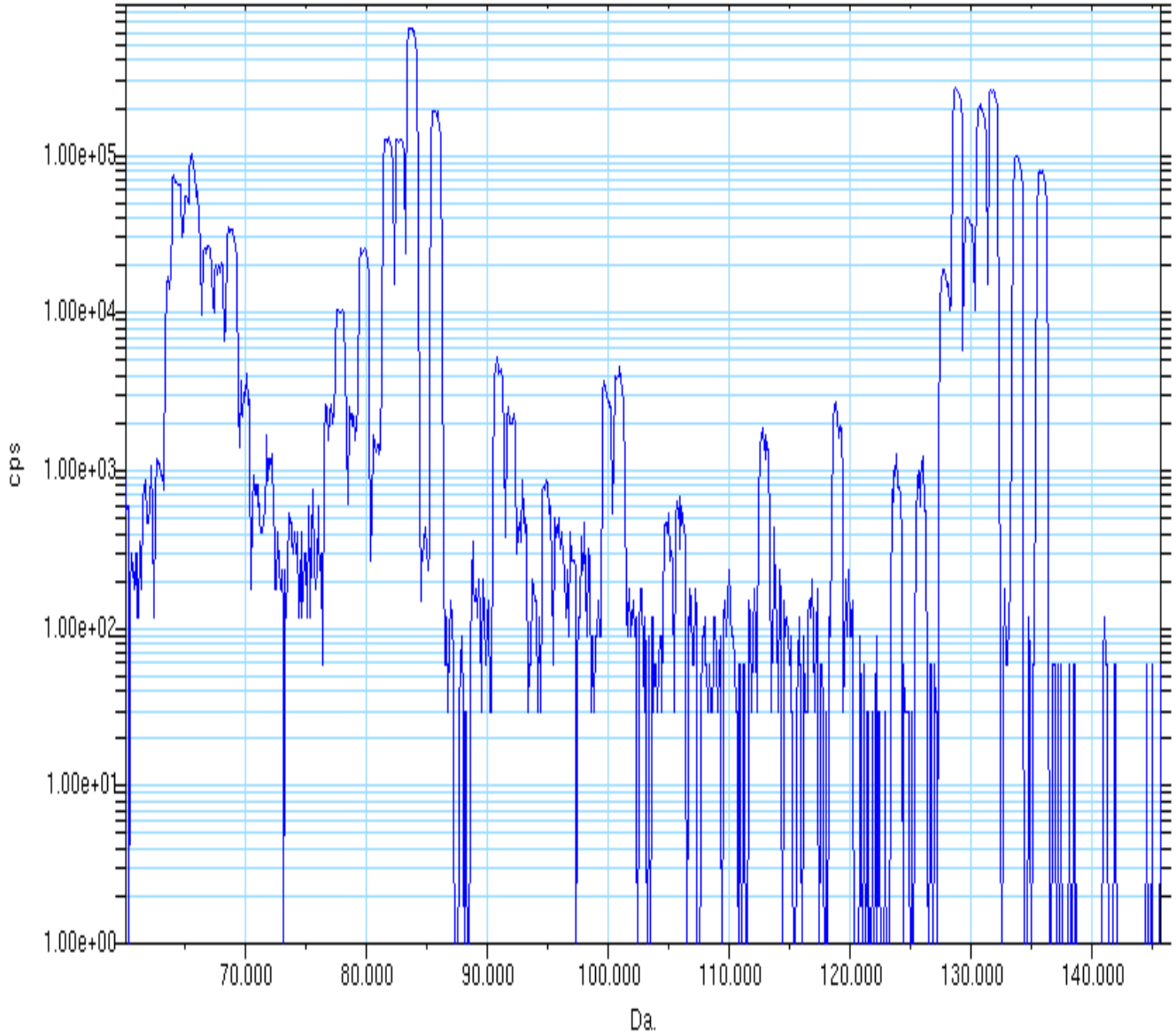

Within 0.75 sec integration at each unit mass precision of 1-2% are achieved

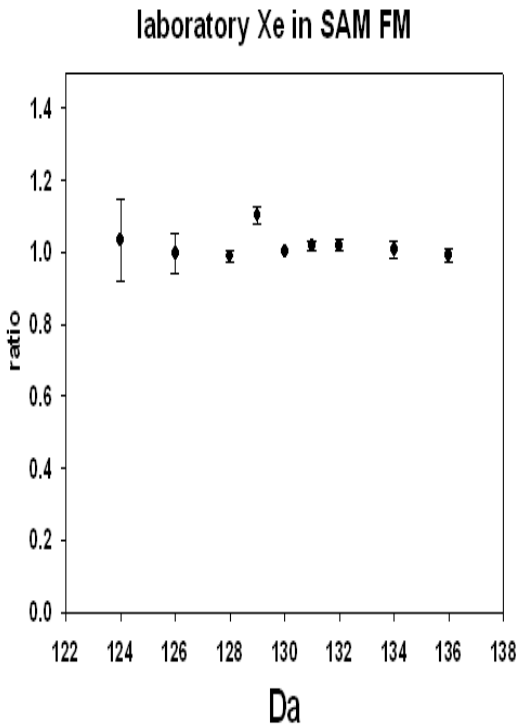

TRACE SPECIES AND MS DYNAMIC RANGE

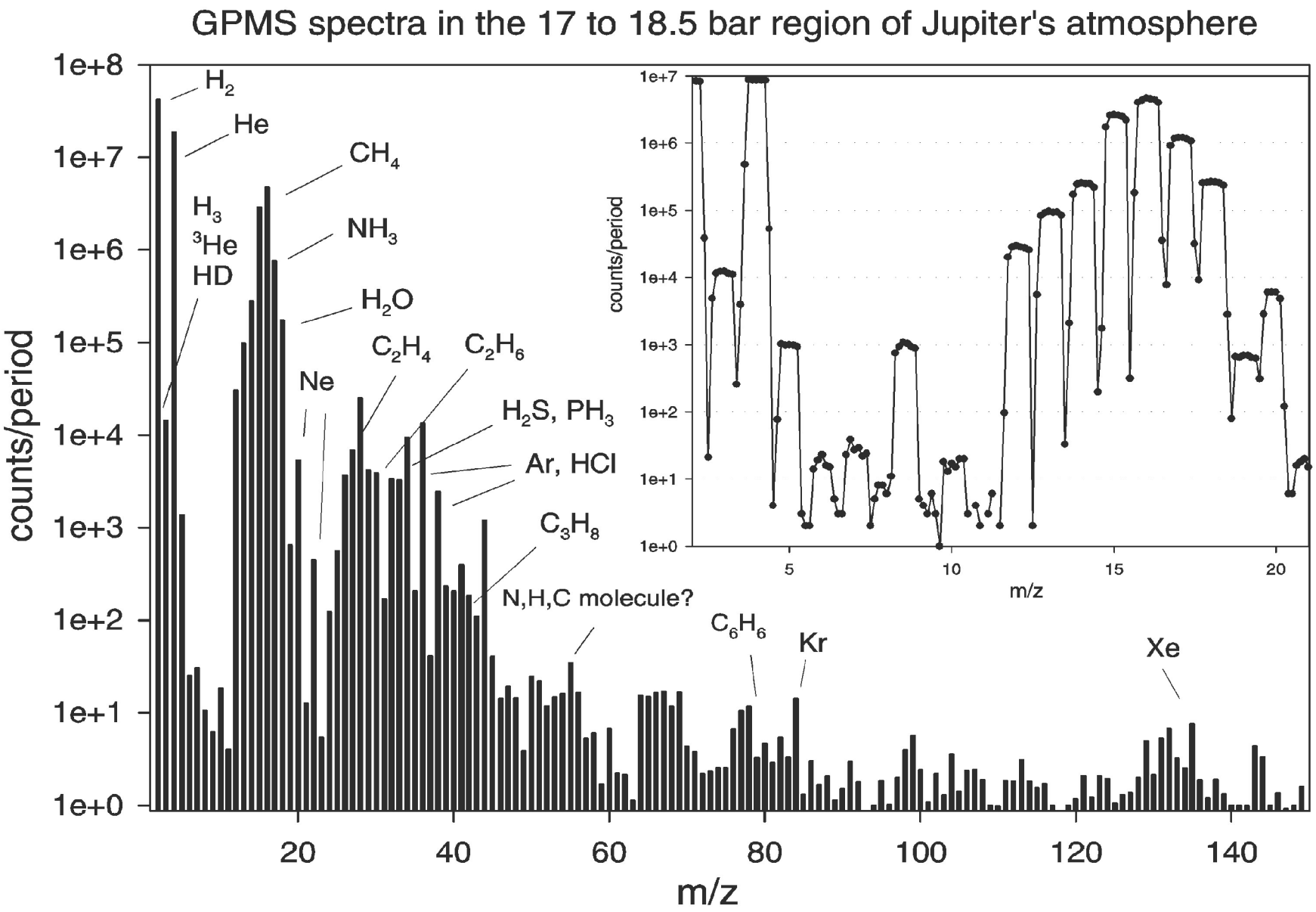

NOBLE GAS AND NITROGEN ABUNDANCE AND ISOTOPE SCIENCE OBJECTIVES

Hydrodynamic escape on early Earth (Pepin, Earth & Planetary Letters 252, 1-14, 2006)

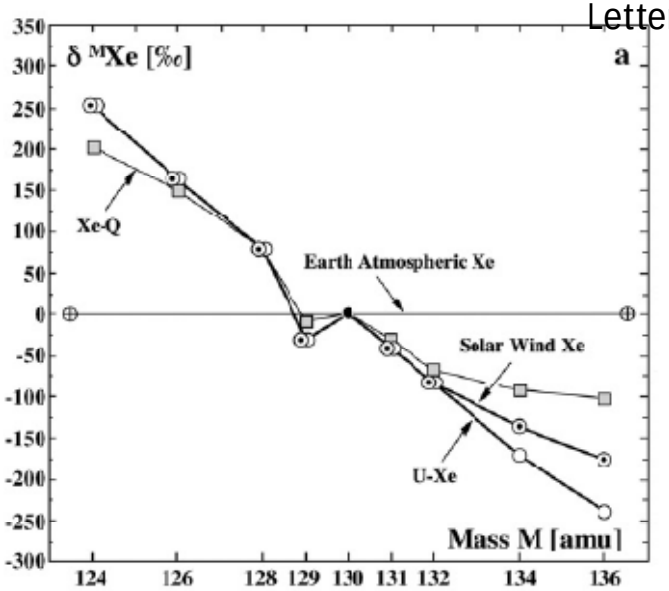

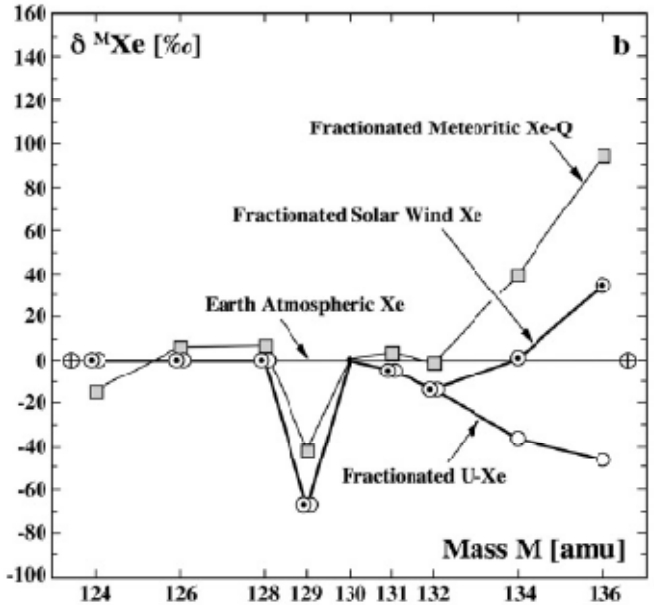

a) Prior to fractionation

b) After fractionation in first 150 M years of Earth's history

c) After fractionation and with additional contributions to ^{129}Xe and $^{131-136}$Xe from decay of ^{129}I and ^{244}Pu

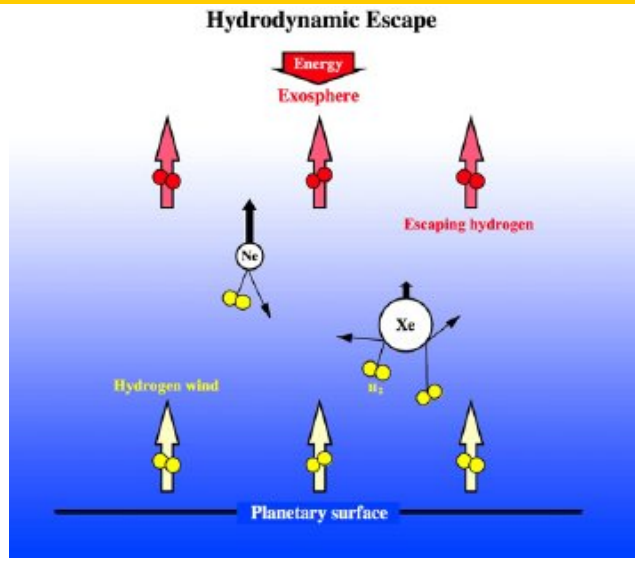

INTENSE ENERGY SOURCES FOR FRACTIONATION
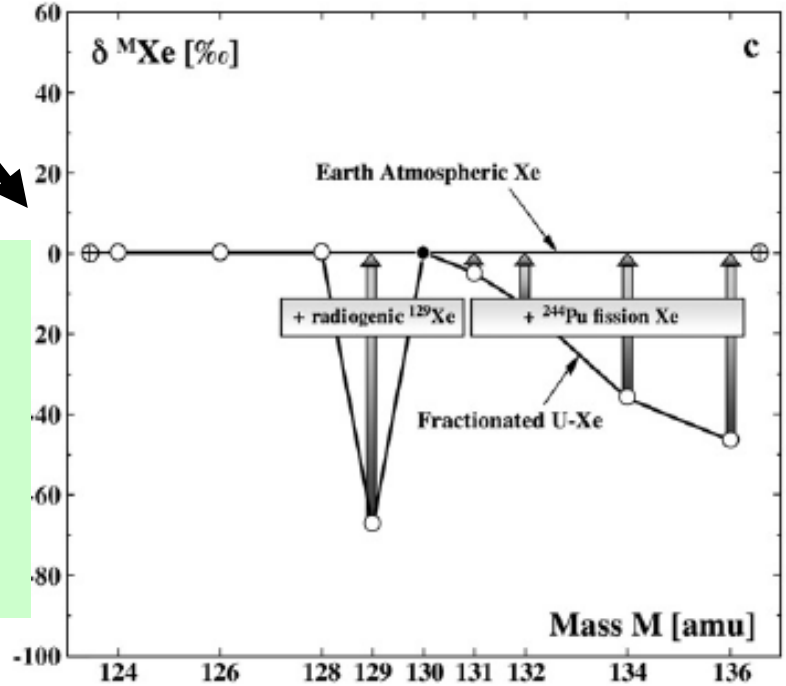
1) Impactor that formed moon
2) High early solar EUV luminosity (50-150 MY)