ROBOTIC LUNAR LANDERS FOR SCIENCE AND EXPLORATION

D.G. Chavers[(1)], B. A. Cohen[1], J. A. Bassler[1], M. S. Hammond[1], D. W. Harris[1], L. A. Hill[1], D. Eng[2], B.W. Ballard[2], S.D. Kubota[2], B. J. Morse[2], B. D. Mulac[1], T.A. Holloway[1], and C. L. B. Reed[2]

[(1)]NASA Marshall Space Flight Center, Huntsville AL 35812, USA, (Greg.Chavers@nasa.gov):
[(2)]The Johns Hopkins University Applied Physics Laboratory, Laurel MD 20723, USA

ABSTRACT

NASA Marshall Space Flight Center (MSFC) and The Johns Hopkins University Applied Physics Laboratory (APL) have been conducting mission studies and performing risk reduction activities for NASA's robotic lunar lander flight projects. This paper describes some of the lunar lander concepts derived from these studies conducted by the MSFC/APL Robotic Lunar Lander Development Project team. In addition, the results to date of the lunar lander development risk reduction efforts including high pressure propulsion system testing, structure and mechanism development and testing, long cycle time battery testing and combined GN&C and avionics testing will be addressed. The most visible elements of the risk reduction program are two autonomous lander flight test vehicles: a compressed air system with limited flight durations and a second version using hydrogen peroxide propellant to achieve significantly longer flight times and the ability to more fully exercise flight sensors and algorithms.

1. INTRODUCTION

Since 2005, the team has been supporting NASA's Exploration Systems Mission Directorate and Science Mission Directorate designing small and medium lunar robotic landers for diverse missions. The primary emphasis in the past two years has been to establish anchor nodes of the International Lunar Network (ILN), a network of lunar science stations envisioned to be emplaced by multiple nations. This network would consist of multiple landers carrying instruments to address the geophysical characteristics and evolution of the moon. Additional mission studies have been conducted to support other objectives of the lunar science and exploration community and extensive risk reduction design and testing has been performed to advance the design of the lander system and reduce development risk for flight projects.

Four candidate missions are discussed followed by a description of the lunar lander concept to accomplish the mission. These missions are:

1) International Lunar Network – anchor nodes for a geophysical mission
2) Lunar Polar Rim – rapid mission architecture for quickly demonstrating technology and landing on a polar rim
3) Lunar Polar Volatiles Stationary (LPVS) – single point lander to study volatiles in a Permanently Shaded Region (PSR)
4) Lunar Polar Volatiles Mobility (LPVM) – a lander with rover to study volatiles at multiple locations in a permanently shaded region (PSR).

The first three missions discussed in this paper use landers that are considered to be in the small lander class and share many common features. The forth mission (using a single lander with mobility) is considered to be in the medium lander class and is a modified Robotic Lunar Exploration Program 2 (RLEP-2) design informed by new knowledge gained from the small lander class efforts. Trades were performed regarding mission design and in all cases, a direct trajectory was found to be the best solution for cost and mass. An overview of the mission design will be provided in the next section.

2. MISSION DESIGN OVERVIEW

Each mission concept discussed in this paper whether a single lander or multiple landers uses a direct trajectory from the Earth to the Moon. There is no capture in lunar orbit. Extensive trades were performed and more landed mass and less complex propulsion systems are achieved for the direct trajectory. The lander or landers will separate from the launch vehicle after the trans-lunar injection (TLI) burn and will be individually operated as they follow their direct earth-to-lunar trajectory flight paths. For a multi-lander mission, the landers will travel in an "armada" configuration and be controlled independently. A two lander mission concept for cruise is shown in Fig. 1. During this 5 day trans-lunar phase, the propulsion system will operate periodically to perform trajectory correction maneuvers (TCM), targeting for landing site, attitude control during cruise, such as spinning up and down, and nutation damping. Upon arrival at the moon the lander

or landers will receive final landing information update and then become fully autonomous. The solid rocket motor (SRM) will provide the initial and largest delta V to slow the spacecraft prior to the lunar descent phase. The braking burn begins at 17 km above the lunar surface and provides about 2.5 km/s of delta V. After the solid stage is spent, the empty casing is separated and the lander will use the bi-propellant descent thrusters to provide controlled descent to the surface. At SRM casing separation, the relative velocity of the lander is just over 100 m/s. The ACS thrusters will control the attitude while the descent thrusters reduce the vertical and lateral velocity to 1 m/s or less. Fig. 2 shows the descent phase for the single solar /battery lander and this scenario is similar for the other missions discussed in this paper.

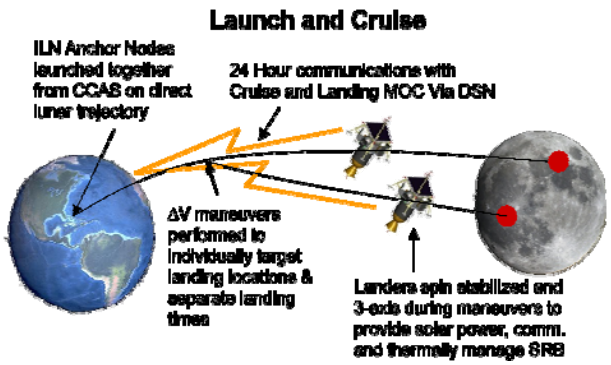

Fig. 1. Trans-Lunar cruise

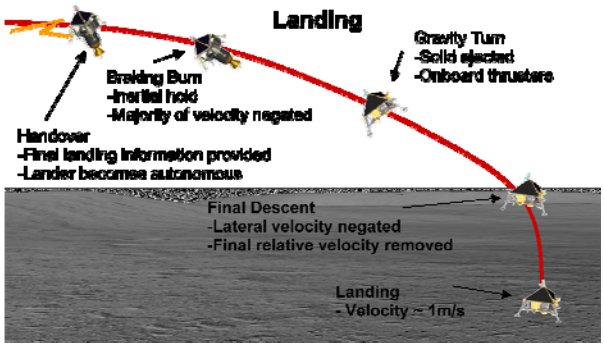

Fig. 2. Landing phase

3. INTERNATIONAL LUNAR NETWORK

4.

Because the Moon's geologic engine largely shut down long ago, its deep interior is a vault containing a treasure-trove of information about its initial composition, differentiation, crustal formation, and subsequent magmatic evolution. Data concerning interior structure and dynamics are difficult to obtain, but obtaining them is worth considerable effort. Geophysical measurements are often the best, and only, way to obtain information about the composition and structure of the deep lunar crust, mantle, and core. The narrow extent and instrumental limitations of the Apollo seismic, magnetometer, heat flow, and laser ranging network resulted in very little information regarding crustal variations, limited resolution of upper-mantle mineralogy, and few details about the lower mantle or the lunar core. Other geophysical methods also had limited coverage and resolution. Therefore, a next-generation lunar geophysical network, acquiring seismic, heat-flow, and magnetic-field data, has been a strong desire of the planetary geophysics community for many decades. Geophysical observations of the Moon via a global and long-lived network of stations such as that envisioned for the ILN will yield a wealth of knowledge from regions heretofore inaccessible from use of the Apollo database. The payload and concept of operations was guided by the science objectives outlined in the Scientific Context for Exploration of the Moon [1].

The science requirement to operate continuously through the lunar night dictates either a solar-powered system with large battery masses or a nuclear power system. The objectives are met with 4 landers so multiple landers are desired on a single launch since launch costs per lander are amortized with multiple landers on a single launch vehicle. The actual instruments for this mission are expected to be chosen through a competitive announcement of opportunity process, however it was necessary to identify notional instruments to perform the design study. Table 1 shows the instruments with mass and power characteristics (excluding lander accommodations and deployment such as booms)

Table 1. Notional instruments for ILN mission

Lander Payload	*Objective*	*Mass kg*	*Power watts*
Seismometer	Seismometry (continous)	6.5	3.4
"Mole"	Sub-surface heat flux	2	5.7 peak 0 non-op
Electrometer, magnetometer Langmuir probe	EM sounding	3.4	6.1 op 2 non-op
Retro-reflector		0.9	0

There were two lander concepts developed that could meet the mission objectives and the distinctive feature that separates these is the power system. The lander system was optimized to reduce power and only require a few tens of watts. However the long lunar night, almost 15.5 earth days (372 hours) requires substantial total energy. One lander concept uses an Advanced Stirling Radioisotope Generator (ASRG). The other uses solar photo-voltaic arrays (called the solar/battery concept) for power during the daylight and secondary batteries for night operations. Some system configuration trades with regard to penetrators, hard landers, and soft landers are discussed in [2]. The resulting concepts are two soft propulsive landers that meet the requirements for the ILN mission.

ASRG Lander Design

The ASRG lander configuration (shown in Fig. 3) is estimated at 155 kg dry mass, which includes a payload suite estimated at 23 kg including payload accommodation and deployment. This lander configuration will not be power limited on the surface, as the ASRG is expected to provide well over 100 W, which also is adequate for the cruise and landing phases of the mission. NASA's proposed ILN mission consists of four landers operating simultaneously on the lunar surface, and this configuration allows four of the ASRG landers to be accommodated and launched by a single Atlas V Evolved Expendable Launch Vehicle (EELV). Table 2 shows attributes of the ASRG ILN and Fig 4 shows the landed configuration.

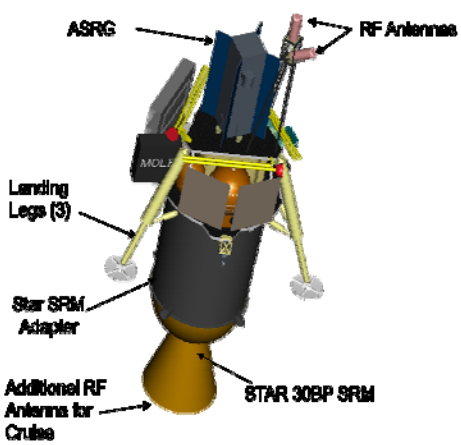

Figure 3. ASRG lander in cruise configuration

Table 2. ASRG lander design concept

Power	• ASRG primary power source • Power system electronics • Primary batteries
Propulsion	• Bi-propellant • 445 N axial divert and attitude control system (DACS) engines (3) • 30 N ACS DACS engines (6) • 2 custom metal diaphragm tanks
Avionics	• Integrated flight computer and power distribution unit (PDU)
RF	• S-band • 1-W transmit power • Antenna coverage for near side operations
Guidance, navigation, and control (GN&C)	• Star trackers (dual head) • Inertial measurement Unit (IMU) • Radar Altimeter • Landing Cameras (2)
Structure	• Composite Primary Structure

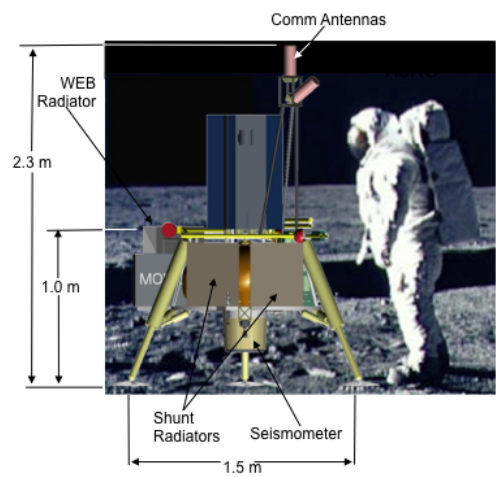

Fig. 4 Landed configuration of ILN ASRG lander

Solar / Battery Lander

The Solar array-battery (SAB) lander configuration (shown in Fig. 5) is somewhat larger; it is estimated at 265 kg of dry mass including a 19 kg payload suite with payload accommodation. This is less than the ASRG lander concept since a guest payload was removed for mass and power constraints. This larger size is entirely due to the large battery storage cells that are required to operate and survive through the lunar night. This lander configuration is operationally more

complex and as capable as the ASRG lander. However, it will provide the baseline science objectives specified by the Science Definition Team [3]. This is accomplished by reducing nighttime power operation to provide power only to the seismometer continuously and cycle the other instruments one at a time. The lander will enter a low-power, limited functionality mode at night and will provide data storage solely for the instruments. All data transmission and monitoring will be done during each lunar day (14 earth days per month). One of the goals of this lander design has been to maintain a launch mass such that two landers can be accommodated and launched using a single Falcon 9 Block 2B launch vehicle under development by SpaceX and expected to provide a more economical launch solution than the EELV class of launch vehicles. If this launch vehicle constraint is eliminated, then the solar-battery lander could be allowed to grow even further, and more capability could be provided using this solar array and battery_solution. Table 3 shows the SAB attributes.

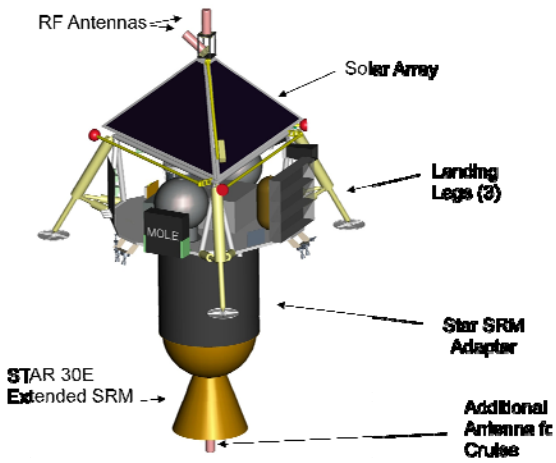

Fig. 5: Solar / battery lander in cruise configuration.

5. LUNAR POLAR RIM (LPR)

Another mission of interest is a rapid mission to a nearly permanently lit polar rim. An instrument suite to interrogate the radiation environment and the particle energies and species provides knowledge about the local environment. Technology demonstration of the Autonomous Landing and Hazard Avoidance Technology (ALHAT) and a microrover can be accomplished quickly with this approach. Notional payloads are listed in Table 4.

Table 3. Solar battery lander design concept

Power	• Solar array power for cruise and lunar day • Secondary batteries for lunar night • Power system electronics
Propul-sion	• Bi-propellant • 445 N axial DACS engines (6) • 30 N ACS DACS Engines (6) • 2 custom metal diaphragm tanks
Avionics	• Integrated flight computer and power distribution
RF	• S-band • 1-W RF transmit power • Antenna coverage for near side operations
GN&C	• Star tracker (dual) • IMU • Radar Altimeter • Landing Cameras (2)
Structure	• Composite Primary Structure

Table 4. Notional payload for Lunar Polar Rim demonstrator

Lander Payload	*Objective*	*Mass kg*	*Power watts*
ALHAT	Risk reduction of ALHAT system in a relevant lunar environment	50.0	260 (descent)
Microrover	demonstrate micro rover on lunar surface	4	8
Imaging camera	Provide data on local lighting, topography, surface composition	1.8	2.6
Radiation Monitoring	Characterize and understand surface radiation environment	6.4	9
Neutral Mass Spectrometer	In-situ lunar atmosphere measurements	4.6	16.9
Neutron Spectrometer	Determine the flux and energies of neutrons	1.3	2.3
Laser reflectometer	Enhance laser ranging accuracy	0.9	0

The concept emplaces a single lander on a lit rim with a microrover that can transit several meters from the lander. The landing will occur at a predetermined and relatively obstacle free location. The notional LPR mission payload is significantly heavier and more power demanding than the ILN instruments. For the instruments assumed in the design study, the LPR mission will need to accommodate a total payload mass on the order of 69 kg which includes growth margin. In order to accommodate this extra mass, the larger ILN Solar Array-Battery (SAB) lander structure is used for the LPR mission concept but most of the massive secondary batteries required for the 6 year solar battery ILN mission were removed. Enough secondary batteries remain to survive a 100 hour eclipse from the sun due to local terrain shading. Table 5 highlights the heritage features.

Since this study was performed with a schedule constraint, as many heritage components as possible were used. If the same high performance components as used for the ILN mission are used then the payload capability of the lander is well over 100 kg. Since heritage components are used, the payload capability with payload accommodation and margin allowance is 95 kg for this mission and the lander has a dry mass of 323 kg with margin allowance and a launch / cruise configuration mass of 1391 kg with margin allowance. Additional features over the ILN landers include 12 ACS thrusters for precision landing and TVC on the SRM for precision landing. Optical terrain relative navigation (TRN) is also included for this mission to allow precision landing.

6. LUNAR POLAR VOLATILES STATIONARY (LPVS) – single

The primary LPVS mission goal is to conduct a detailed inventory of volatile species and provide sufficient analysis to determine or greatly constrain the sources of polar volatiles and their nature. Specific science objectives are to:

1. Determine the chemical composition, abundance and isotopic ratios of volatiles cold-trapped in permanently shadowed regions of the lunar poles.
2. Determine the near-surface vertical profile of the lunar polar deposits.
3. Monitor the time-sensitive magnitude and variability of current volatile deposition from the exosphere and the environmental conditions that control this process.

Table 5. Lunar Polar Rim lander design concept

Power	Heritage parts • Solar array power for cruise and lunar day • Secondary batteries for eclipse • Power system electronics
Propul-sion	• Bi-propellant • 445 N axial DACS engines (6) • 30 N ACS DACS Engines (12) • 2 custom metal diaphragm tanks
Avionics	Heritage • Rad 750
RF	Heritage • S-band • 1-W RF transmit power • Antenna coverage for near side operations
GN&C	Heritage • Star tracker (dual) • IMU • Radar Altimeter • Landing Cameras (2) • TRN for precision landing in earthshine • Increased TVC accuracy on Solid Braking Motor
Structure	• Composite Primary Structure

The instruments for this LPVS mission are expected to be chosen through a competitive announcement of opportunity process; however, in order to perform a meaningful design study, it was necessary to identify a notional instrument suite. Table 6 shows the instruments used for this mission concept and their associated mass and power.

As a secondary scientific objective, a seismometer was also included in the instrument suite. This allows the ASRG powered lander to also function as an anchor node for a future geophysical network.

Table 6. Notional Instruments for LPVS Mission

Lander Payload	*Objective*	*Mass kg*	*Power watts*
Drill & deployment mechanism	Recover regolith samples from depths of 1 m	39.0	108.3 – 520
Sample Camera	Imaging of drill sample\	2.3	14
Sample Delivery System	Process core material for analysis	6.5	26

Mass Spectrometer	Determine the various volatile compounds	19.5	24 (48 peak)
Neutron Spectrometer	Determine the flux and energies of neutrons	1.3	2.3
Ground Penetrating Radar	Determine the depth profile of regolith to 10's of meters	5.0	6.5
Seismometer	Long-term monitoring of seismic activity	6.5	3.4

The mission concept will emplace a single stationary polar lander in a permanently shadowed lunar crater. Specific landing site selection will be optimized for science return. The landing will occur at a predetermined and relatively obstacle free location and will make use of optical TRN for a safe landing [4].

Communication opportunities within a PSR are particularly challenging and will pose the primary landing site constraint. Since there is no available lunar orbiting communications asset, direct line of sight between the lander and earth is required in order to provide data communication. A direct communication path can only be obtained in a PSR when the landing site is permanently shadowed from the sun but visible from earth, resulting in "earthshine" conditions which also supports optical TRN. Fig. 6 shows representative lunar South Pole images from earth based radar illuminations and the Lunar Orbiter program illustrating areas that are shadowed from the sun but visible from Earth.

Radar illuminates view from earth *Orbiter depicts sunlit and dark areas*

Fig. 6. Areas Shadowed from Sun but visible from Earth

The notional LPVS mission instrument suite is significantly heavier and more power demanding than the ILN mission instruments. For the instruments assumed in the design study, the LPVS mission will need to accommodate a total mass on the order of 80 kg and peak power consumption during drill operations over 600 watts, including growth margin. In order to accommodate this extra mass, the larger ILN SAB lander structure is used for the LPVS mission concept but the solar panels and most of the massive secondary batteries required for the 6 year solar battery ILN mission were removed. Since solar panels would be of no use in a PSR, an ASRG is used to provide power for surface operations. Only a relatively small mass allocation for rechargeable batteries remains for the LPVS lander to handle surface peak power needs that exceed the ASRG instantaneously available output.

The LPVS lander in the surface operations configuration is shown in Fig. 7. The cruise configuration is very similar to the ILN configuration. The total lander dry mass is approximately 275 kg including growth margin. Table 7, below, provides key LPVS lander system attributes. In addition to the science instrument and power system changes noted above, other key changes from the ILN SAB lander configuration include the use of optical TRN and the addition of thrust vector control to the solid braking motor. Both of these features have been added to support precision landing required to effectively target the crucial earth lighted but sun shaded landing location.

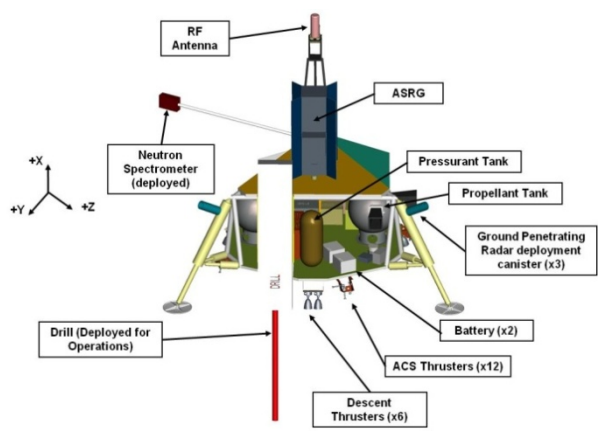

Fig. 7. LPVS lander in surface operations configuration

Table 7. LPVS Lander attributes

Power	• ASRG primary power source • Small compliment of rechargeable batteries • Power System Electronics
Propulsion	• Bi-Propellant • 445 N Descent DACS Engines (6) • 30 N ACS DACS Engines (12) • 2 Custom metal diaphragm tanks
Avionics	• Integrated Flight Computer and power distribution
Communications	• S-band • 1 W RF transmit power • 2 kbps uplink, 100 kbps downlink capable on surface
GN&C	• Star Tracker (dual) • IMU • Radar Altimeter • Landing Cameras (2) • TRN for precision landing in earthshine • Increased TVC accuracy on Solid Braking Motor
Structure	• Composite Primary Structure

As a result of several studies, a capabilities comparison of payload power versus payload mass for the small landers and is shown in Fig. 8.

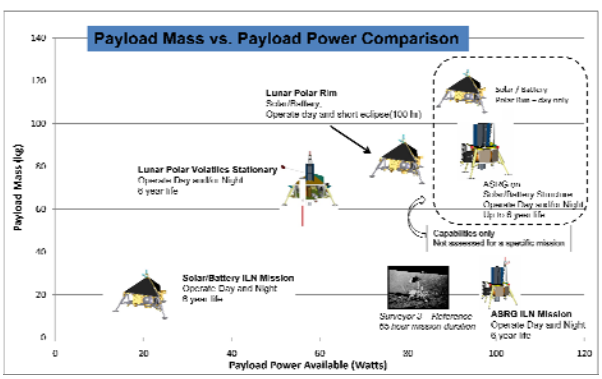

Fig. 8. Capabilities comparison for small lunar landers

7. LUNAR POLAR VOLATILES MOBILITY (LPVM

As mentioned previously, a mission to sample for volatiles in a permanently shaded crater is of interest. To adequately sample and understand the distribution of volatiles requires mobility. A mission concept was developed in the RLEP 2 Program to allow 10 to 20 samples to be collected in an area of several square kilometres. The following notional instruments shown in Table 8 (with margin allowance) were used as the required payload to develop the lander concept for the RLEP 2 architecture 7 concept. Major updates from RLEP 2 lander design include changing to a higher performing propulsion system and changing rover power system from Multi-Mission Radioisotope Thermoelectric Generator (MMRTG) to an ASRG.

Table 8. Notional instruments for LPVM mission based on the RLEP-2 requirements

Lander Payload	*Objective*	*Mass kg*	*Power watts*
Rover Neutron Spectrometer	Lateral distribution of H	.7	2.3
Downhole Neutron Spectrometer	Vertical distribution of H	.8	2.9
Downhole Imaging	Imagery of volatiles	0.3	1
Gas Chromatograph Mass Spectrometer	Determine species of volatiles	13	10.4 (avg) 47
Drill & Sample Acquisition		41.6	98
Sample Delivery		8.5	34
X-ray Diffraction	Mineralogy	.9	12
Ground Penetrating Radar	Subsurface geological	3.5	8
Exospheric Mass Spec	Measure components of exosphere	6.5	26
Surface imaging	Geological context	1.1	11

Due to the mobility requirement, this lander is larger than the previous landers mentioned in this paper. The study used a previous architecture developed for the RLEP 2 as the point of departure and informed the study with updated knowledge from the small class lander studies and risk reduction activities.

The LPVM flight system consists of three elements: a Solid Rocket Motor for braking, a lander stage for descent, precision landing, and rover egress, and a rover for performing the surface science mission. This

study describes two possible rover configurations. The first uses non-rechargeable batteries to power the rover until depletion, ending the mission. The second has an ASRG as its principal power source, with batteries recharged by the ASRG to support peak power loads such as drilling operations. Figure 9 below illustrates the integrated flight system and the battery and ASRG rover configurations.

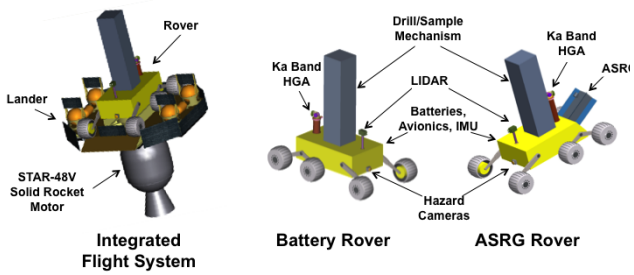

Figure 9. LPVM lander and rover

The baselined Solid Rocket Motor is a Star 48-V that performs the primary braking burn before final descent and landing, after which it is jettisoned. It has thrust vector control, with a self-contained battery, to provide attitude control during the burn.

The lander provides all propulsion and attitude control except during the SRM burn. In addition, it supplies power, provides structural support for the rover during flight, and acts as a platform for rover egress after landing. After rover egress, the lander has no further functions. Therefore, it only carries components that are not needed after landing. The lander has no legs, but instead lands on 4 small landing pads to facilitate rover egress. Furthermore, it has no star tracker, IMU, or LIDAR because these sensors are needed for rover navigation and are therefore contained in the rover. For the same reason, it has no avionics, power system electronics / power distribution unit, or communication system.

The ASRG lander has smaller solar arrays than the battery lander because the rover's ASRG supplies some of the power needed during flight. The lander uses the rover's processor, star tracker, and IMU, as well as its own RADAR altimeter and 2 optical cameras, for control during flight.

The rover is a mobile platform whose primary function is to support the science measurements by providing the following services:

- payload mobility, navigation, and hazard avoidance
- electrical power
- thermal management
- data processing and storage
- communications

The mast-mounted LIDAR serves as the primary sensor for navigation and hazard avoidance for the rover. With acquisition and processing of a hazard avoidance LIDAR scan every 3 meters, the rover can traverse ~140 m/hr, or ~3 km/day.

The battery mission rover power system consists of 39 primary batteries providing 26,200 Watt-hours of electrical energy (80% dept of discharge) to power the rover subsystems and science instruments. At an average power load of 250 W, the battery rover can operate for approximately 4.5 days with a minimal set of instruments before battery depletion ends the mission.

The ASRG rover configuration consists of a 140 watt ASRG supplemented by three rechargeable batteries to provide additional power for peak-demand operations such as drilling. At 80% depth of discharge, the batteries provide 2,280 Watt-hours of energy, enough to power the rover's entire 250 W average power load for 11.5 hours before the rover is commanded into a low-power hibernation mode to allow the batteries to recharge from the ASRG.

Rover thermal management is a primary challenge due to the temperatures of approximately 40˚K in the surface mission's permanently shadowed regions. To preserve heat on the surface, the rover utilizes the WEB design from the ILN mission to maintain the internal temperature at approximately 15˚C. The battery rover requires larger heaters than the ASRG rover, which uses supplemental waste heat from the ASRG. During the mission cruise phase, a passive variable heat transfer link thermally connects the WEB to the radiator; upon exposure to the cold surface environment, the link opens to isolate the WEB from the radiator.

The rover hosts an avionics system based on a low power processor which executes all C&DH, GN&C, and landing functions during flight, as well as the rover navigation, hazard avoidance, and C&DH functions during the surface mission. Normal surface communications use a 14 cm mast-mounted gimbaled high gain antenna that tracks the earth using the star tracker and IMU to maintain continuous communications, whether roving or stationary. A surface-mounted patch low gain antenna provides a low rate emergency communications capability.

Tables 9 and 10 below show the primary characteristics of the lander and the rover.

Table 9. LPVM lander attributes

Power	• Battery for landing only
Propulsion	• Bi-Propellant • 445N Descent DACS Engines (12) • 30N ACS DACS Engines (12) • 2 Custom metal diaphragm tanks • Star-48V with TVC
Avionics	• On rover
Communications	• S-band (during cruise) • 1 W RF transmit power
GN&C	• Radar Altimeter • Landing Cameras (2) • LIDAR – hazard avoidance on rover • Star Tracker and IMU on rover
Structure	• Composite Primary Structure

Table 10. LPVM rover attributes

Power	• Battery mission - Li-$SOCl_s$ primary • ASRG mission - 140 W ASRG w/ Li-CoO_2 secondary
Avionics	• LEON3, 60 MPS
Communications	• X / Ka band • 2.5 W X-band, 1 W Ka-band • 2 kbps uplink with X-band, 100 kbps downlink w/ Ka-band
GN&C	• LIDAR – hazard avoidance • Star Tracker • IMU • Optical Cameras
Structure	• Aluminum

8. RISK REDUCTION

To reduce development risks, some testing and risk reduction activities are being performed. These include the following and are ongoing through 2010.

8.1 Propulsion

High Thrust to Weight Bi-Propellant Thrusters Qualification

The mission concepts recently studied by this team use pulsed, high thrust to weight thrusters for TCM, descent, and attitude control. Thrusters of this class have flight heritage in DoD applications but the ILN, LPR, LPVS, and LPVM missions will require longer burn times for TCMs and landing and the use of MON-25 propellant to assist with the propulsion system thermal management. Risk reduction testing has recently been performed over a full mission duty cycle spanning 995 seconds for a 445 N DoD flight heritage descent thruster. Fig. 10 shows the test setup for the high thrust to weight thrusters and a size comparison between a conventional thruster and the DoD flight heritage thruster. Test results demonstrated good thermal control and combustion stability with MON-25. Planning for testing of a 30 N DoD flight heritage attitude control system (ACS) thruster is in progress with testing planned for July, 2010.

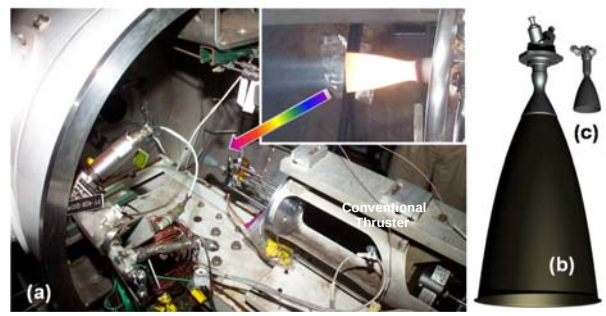

Fig. 10. Test setup of descent thruster (a) and comparison of thruster envelope for (b) conventional thruster and (c) DACS

Helium Pressure Regulator for High Pressure Blow Down Ratio

The thrusters use a light weight propellant system that requires a pressurant blow down ratio of up to 10:1 with the upstream pressure starting at 69,000 kPa. Available high TRL regulators may not be capable of performing as required at a 10:1 blow down ratio. The test facility at NASA/MSFC has been characterized for testing an existing flight heritage pressure regulator to validate its suitability for this application. Risks to be mitigated by this testing are:

- Regulation pressure band – outlet band may fluctuate causing erratic thruster performance
- Internal media (helium) temperature – rapid expulsion of the pressurant results in cold helium and impacts regulator performance
- Slam start – changes in regulator performance due to filter damage and/or stress on internal components
- Outlet pressure stability – interaction between propulsion system and regulator can cause fluctuation

- Internal leakage – internal leakage during cruise can cause pressure fluctuations in the regulator outlet pressure
- External leakage – overboard pressurant leakage resulting in loss of pressure

8.2 Guidance, Navigation, and Control

The planned landing concept, which will make use of optical cameras and lit landing sites for control of lateral velocities, has not been used for a lunar landing. A least squares optical flow (LSOF) algorithm which takes images of the lunar surface during the descent phase and compares the sequential images to determine the lateral velocity has been completed and bench testing is underway. A navigation filter with inputs from a RADAR altimeter and LSOF has started. The terminal descent phase is completely autonomous and the vertical and lateral velocities are reduced to less than 1 m/s to allow a soft landing. High fidelity end-to-end simulation, field testing, and testing in an earth-based hover/descent lander test bed are on-going to demonstrate the technique and reduce the landing risk. The first testbed lander has been constructed and initial checkout of the closed-loop control algorithms from descent and landing is underway. This first testbed lander, known as the "cold gas" test article or CGTA uses compressed air as the propellant and due to the low specific impulse, has a flight time of about 10 seconds and has performed more than 120 "flights".

A second testbed lander, called the "warm gas" test article or WGTA, using hydrogen peroxide as a mono-propellant, has completed critical design and will begin system hot fire testing during the summer of 2010 followed by demonstrations of the flight like control algorithms with free flights of the vehicle. The WGTA is designed to achieve flight times nearing one minute and allow for validation of control algorithms in a flight-like software environment, utilizing a processor and sensor suite representative of that which would be utilized on a flight mission to the lunar surface. The test article avionics box is capable of hosting multiple processor cards that are candidates for a flight mission. The sensor suite includes an inertial measurement unit, a RADAR altimeter, and optical cameras. Like the CGTA, the WGTA uses a center-line-mounted throttleable thruster that offsets a portion of the vehicle's weight to simulate a lower gravity environment. This gravity canceling thruster is throttled over the duration of the flight to account for decreasing vehicle mass due to expended propellant. The test goals for this article culminate in a controlled descent from a 30m altitude, control to a preferred orientation, and null out lateral translations. The WGTA is shown in Fig. 11.

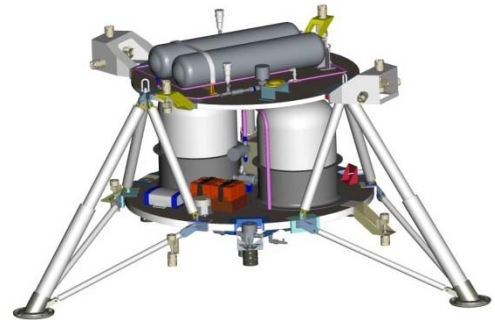

Fig. 11. Warm Gas Test Article

8.3 Power

The length of the lunar night (372 hours) and the severe thermal environment whether in sunlight or shadow (+ 200° C to -110° C) necessitate unique engineering accommodation for the electrical power system (EPS). Secondary (rechargeable) chemical storage batteries are commonly used in conjunction with solar arrays to provide power through the night or in conjunction with nuclear sources to provide supplementary or peak power. Mission designers typically require lifetimes measured in multiple years, tolerance for the thermal environment (+ 200° C to -110° C) and the ability to achieve depths of discharge approaching 80% for the mission duration. Long duration lunar surface missions typically require battery performance that causes stress from all three of these variables at the same time.

To reduce the risks associated with the use of secondary batteries for the long duration surface missions, a series of tests are being performed which are associated with performance and lifetime uncertainties of Lithium-Ion battery cells at elevated temperatures (50° C) for a six year mission life requirement. The plan also incorporates testing for reducing the risks posed by batteries on a notional ASRG powered lander platform. An ASRG powered platform could be used for a ILN mission with seismometers or a LPVS mission in a PSR. For an ASRG mission, the batteries are needed during peak power needs typically for high current such as during the operation of the propulsion system valves or in the case of the LPVS mission during the operation of a drill or an ISRU experiment. The battery cells have been procured and will be tested during the summer of 2010.

8.4 Avionics

Due to the long lunar night, slight increases in power requirements of the avionics during night operations results in additional secondary battery mass. Based on the battery chemistry baselined for the 6 year geophysical mission, 1 watt of power required for continuous operations at night requires approximately 4.5 kg of battery mass. Low power / low mass avionics are desired to reduce the lander dry mass. A leading candidate for the low power single board computer (SBC) with solid state recorder (SSR) and high speed communications is based on the Aeroflex LEON3 processor. The operating modes are software controlled and range from 2 W to 8 W. The board design, design peer review, and the initial board layout are complete. The engineering board test and evaluation are planned for the summer of 2010. The propulsion interface electronics (PIE) which will provide the commands to the propulsion systems valves will have the critical design, development, and evaluation completed in July of 2010.

8.5 Thermal

The ILN mission concept requires thermal management for continuous operation over the wide range of environmental extremes for lunar night and day and a potential large range of latitudes. Efforts are underway to assess and refine available thermal management systems for this application. This includes detailed design studies of compact radiator geometries to parametrically assess the sensitivities to latitude and landing slopes which impacts the view factors to lunar regolith and sun during the lunar day. During the hot lunar day, the radiator will serve to reject as much heat as possible where as during the cold lunar night heat loss through the radiator should be minimized. Design studies, fabrication, and hardware testing of variable conductance heat transport capabilities that couples and decouples the main electronics compartment and the heat rejection radiators are underway.

Another risk that is common to all landers studied by this team is the Solid Rocket Motor (SRM) thermal control. Typically the thermal control of the SRM can be managed by slowly spinning the spacecraft during the cruise phase. However, during TCM and the braking burn, the descent thrusters will be operated and the plume of the descent thrusters will impact the SRM casing. Analysis was performed to determine the impact of the plume impingement and it was determined that the temperature gradient of the SRM would exceed tolerances and a thermal shield is required on the SRM. The descent thruster plume impingement on the multi-layer insulation (MLI) causes the temperature on the outside surface of the blanket to exceed typical MLI allowance. A coating will be needed on the MLI used on the SRM. Design and fabrication is underway and testing of the thermal blanket is planned for the summer of 2010. A thermal profile on the outer surface of the SRM blanket is shown in Fig. 12.

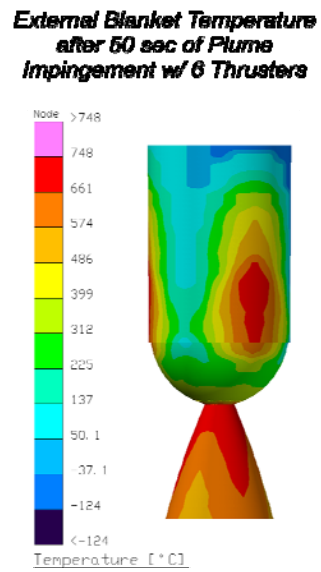

Fig. 12 Outer surface temperature of SRM blanket during bi-prop thruster operation

8.6 Structures and Mechanisms

The overall structure and many of the mechanisms are similar for the several mission concepts studied by this team. Three key areas of risk reduction for the structures and mechanisms technology are discussed below.

Lander leg stability

Since the descent and ACS propulsion systems use pulsed thrusters the vertical touchdown velocity and the tilt angle and rates may not be completely nulled at touchdown. In addition the lunar surface is highly variable with terrain features such as slopes, rocks, and craters which the landing legs must accommodate. Non-linear kinematic math models have been produced for the flight lander to predict the behaviour of the lander at landing and optimize the design. A test program is underway to validate these models. The testing is in three phases: 1)A simple rigid block lander, 2)A 1/2 scale lander model of a flight lander with elastic deformation and 3)The same ½ scale model with inelastic energy absorption systems. Math models were developed for each of these configurations and test data will be used to compare to

the analytic results. To date the first phase (rigid block) of testing has been completed. The test results agreed very well with the analytic predictions. The ½ scale model and the associated test equipment are in final assembly and testing will begin soon.

Star motor adapter

The star motor adapter is a large composite cylinder designed to connect the SRM to the lander. This is a large highly loaded structure with high stiffness requirements. In order to optimize the design a full size model is being built using flight like materials and processes. Test data will be used to validate model and aid in minimizing structural mass. Of particular interest is the 3 point structural attachment to the lander. This descrete attachment approach minimizes lander mass and separation system mass at the expense of inefficiency in the adapter load paths. This is believed to be a good trade due to the higher staging factors on landed mass but the effect on the adapter must be fully understood. This adapter will be subjected to static loads, vibration, and separation tests. Fig. 13 shows the separation test setup.

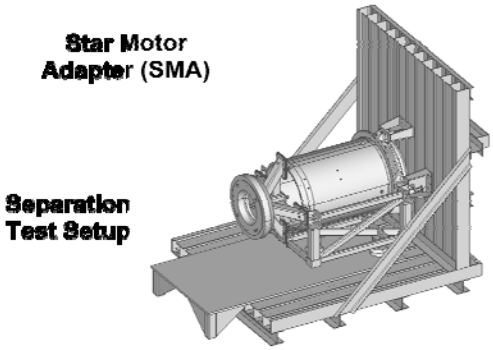

Fig. 13 Test setup for Star Motor Adapter testing

Design and fabrication

The structures and mechanisms team for the lunar flight unit is executing the design and fabrication of the structure for the WGTA using the same composite material expected to be used in the lunar flight system. This allowed the opportunity to prove out processes and interactions of the diverse and distributed team and obtain our lessons learned before the lunar flight vehicle build. This is applicable to refining design and fabrication processes, as well as communication and management approaches.

9. CONCLUSIONS

Several concept studies for small and medium class lunar landers have been performed for various missions. A generic small lander class architecture can be used to accomplish these missions with the advantage of reduced development costs per lunar lander by using a "common bus" approach. The risk reduction activities and basic architecture for these small lunar landers are extensible to medium class landers as shown for some of the components in the LPVM study and also extensible for any airless body lander such as Mercury, asteroids, and Europa, to which similar science and exploration objectives are applicable.

10. REFERENCES

1. Committee on the Scientific Context for Exploration of the Moon, Space Studies Board, National Research Council, *The Scientific Concept for Exploration of the Moon: Final Report*, National Academies Press, Washington, DC, 120 pp., 2007.
2. Morse B. J., Reed C. L. B., Kirby K. W., Cohen B. A., and Bassler J. A. "IAC-08-A.3.2.B1: NASA's International Lunar Network (ILN) Anchor Nodes Mission." IAC 2008 Conference, International Astronautical Commission, Glasgow, Scotland, September 2008.
3. *ILN Final Report, Science Definition Team for ILN Anchor Nodes*, 2009
4. Morse, B. J., Reed, C. L. B., Eng, D. A., Kirby, K. W., Cohen, B. A., Harris, D. W., and Bassler, J. A. "IAC-09.A.3.2.B6: NASA's International Lunar Network (ILN) Anchor Nodes Mission Update." IAC 2009 Conference, International Astronautical Commission, Daejeon, Republic of Korea, October 2009.
5. Morse, B. J., Reed, C. L. B., Kirby, K. W., Cohen, B. A., Harris, D. W., Chavers, D. G., and Bassler, J. A. "GLUC-2010.1.5.B3: NASA's International Lunar Network (ILN) Anchor Nodes and Robotic Lunar Lander Project Update." 2010 Global Lunar Conference, Beijing, Peoples Republic of China, June 2010.