БИАПОС

AREVA

Pu238 RTGs for planets exploration

BIAPOS & INSTITUTE of DYNAMICS of GEOSPHERES of R.A.S, :
A. Pustovalov, V. Gusev, N. Rybkin, M. Pankin
AREVA TA: Jean-Pierre Roux
KRASNAYA ZVEZDA: Eduard Grinberg

IPPW-5 Conference – 23-29 June 2007 – Bordeaux

БИАПОС

AREVA

CONTENT

- Why RHU and RTGs ?
- Existing equipment
- Options for low power generators
  - Less than 1 Watt range
  - Few Watts range
  - Few tens of Watts
- Conclusion.

Why a nuclear option for space exploration?

- Solar power is attractive for space missions
  - Available in space, *but in limited amount (1/r2)*

Rosetta (ESA)

64m2, 400W at 5,2 AU

10 years missions

Planet	UA	W/m2	Surface for 100W (m2 - η=20%)
Earth	1	1492	0,34
Mars	1,52	645	0,78
Jupiter	5,2	55	9,09
Saturne	9,5	17	29,41
Uranus	19,6	4	125,00
Neptune	30	2	250,00

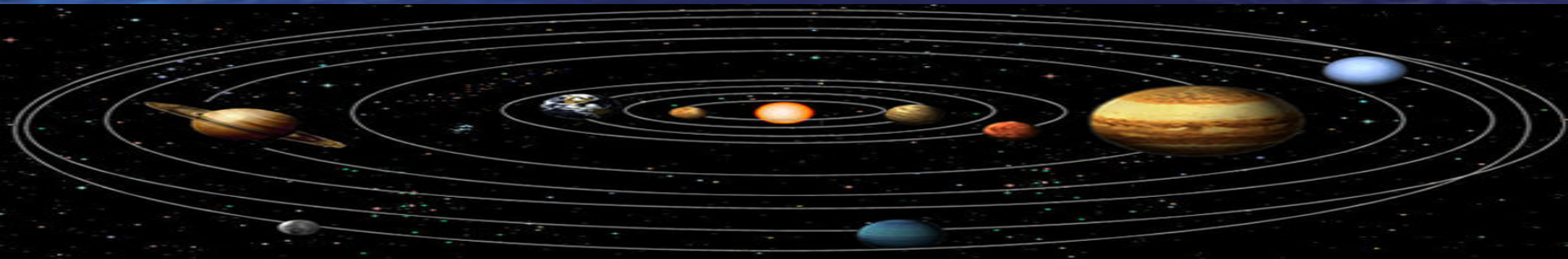

RHUs & RTGs

- Radioisotopic sources: 2 functions
  - Heat is for the thermal control of the equipment (e.g. batteries, electronics)

    e.g. Exomars rover: 20Wth

  - Probes and spacecraft need electrical energy: control, instrumentation, telecom…

    e.g. Cassini spacecraft: 3x300We

    GEP probe: 5We

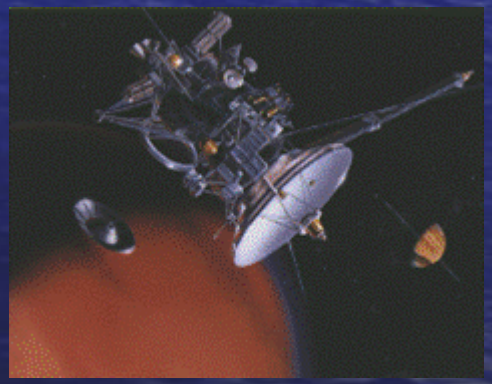

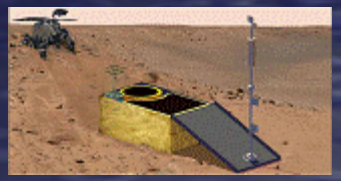

Existing RHU & RTGs

- USA
  - o RHU 1Wth

  - o RTGs: 100-300We

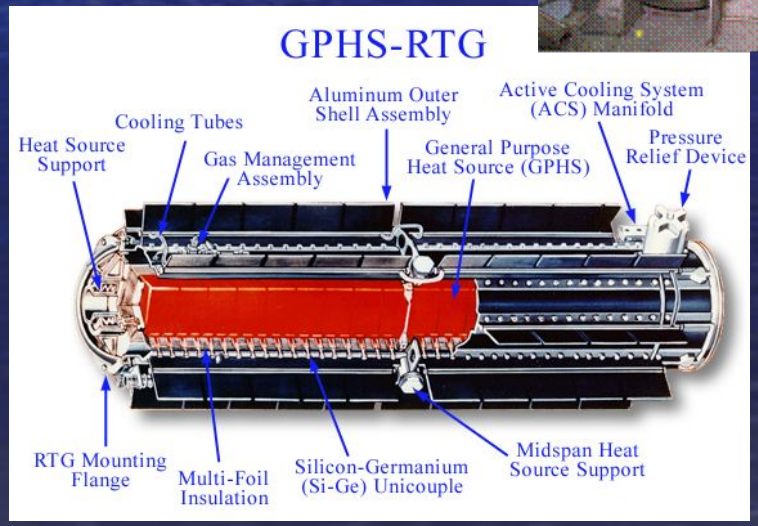

Existing RHU & RTGs

- Russia
  - RHU 8,5Wth

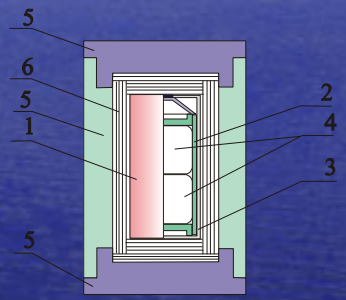

  - RTGs: 0,2 We
    (based on Angel RHU)

Existing RHU & RTGs

- Europe

No Watts or ten's of Watts RTGs

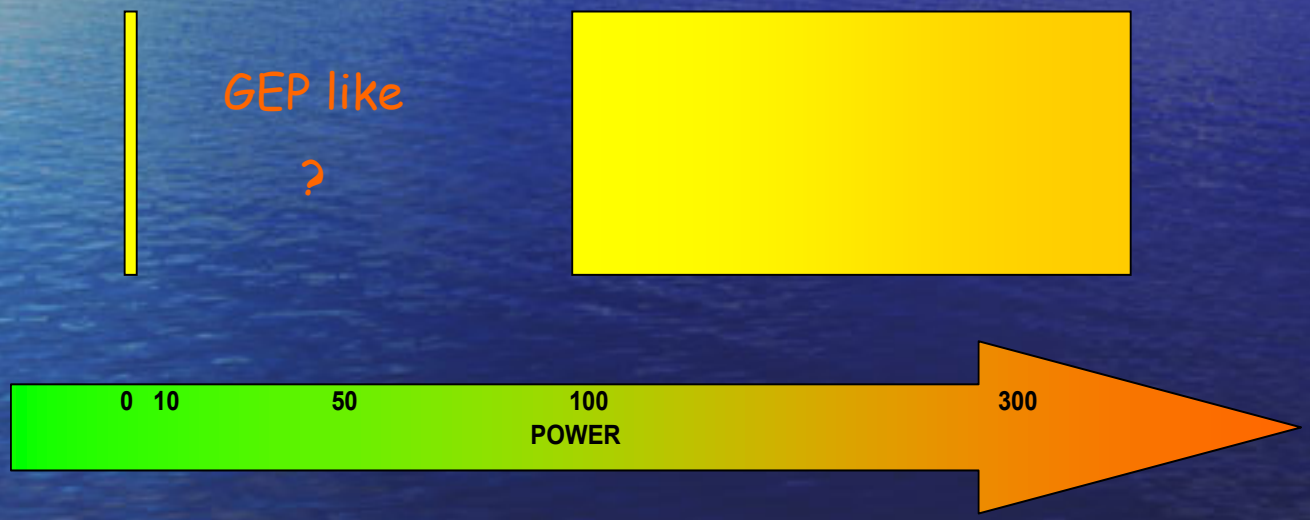

Option: re-use of existing technology

- Russian Angel RTG based design
  - Angel RHUs qualified for Mars 96 mission

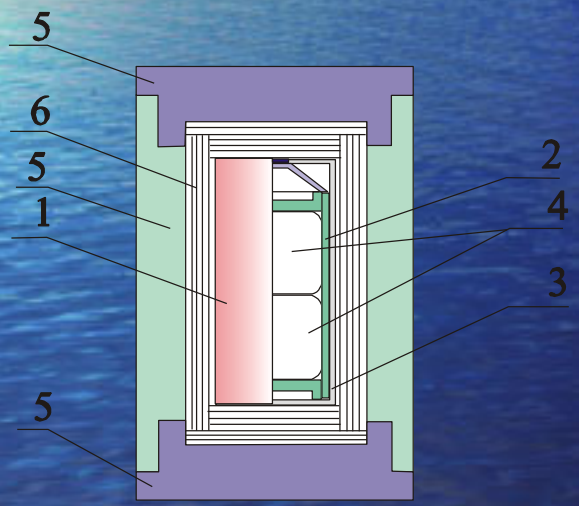

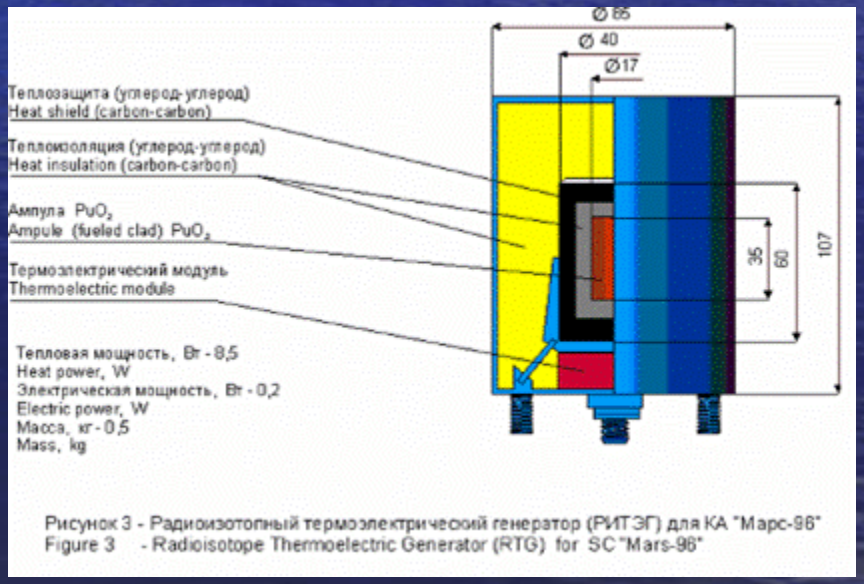

Рисунок 3 - Радиоизотопный термоэлектрический генератор (РИТЭГ) для КА "Марс-96"
Figure 3 - Radioisotope Thermoelectric Generator (RTG) for SC "Mars-96"

Less than 1 Watt RTG

- Angel RTG based design
  - No heat source development
  - Multiple Angel RHUs
  - Bi-Te TEC improved

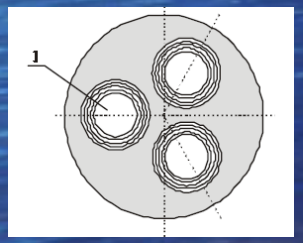

Parameter	RTG designation			
	RTG "Angel"	A-1 RTG	A-2 RTG	A-3 RTG
Electric power, W	0,2	0,30	0,70	1,1
Nominal voltage, V	15	5	5	5
Heat power, W	8,6	8,6	17,2	25,8
Number of RHU "Angel"	1	1	2	3
Efficiency of RTG, %	2,6	3,4	4,1	4,3
RTG Mass, kg	0,5	0,5	1,0	1,5
Specific power, W/kg	0,4	0,6	0,7	0,7
Dimensions of "RHU", mm - diameter - height	40 60	40 60	40 122	90 60
RTG dimensions, mm - diameter - height	85 120	85 120	85 185	160 140
Service life, years	10	15	15	15

Watt to ten Watts

- Angel RTG based design,
  - 2 options
    - Multiple Angel RHUs
    - New RHU development
  - Medium temperature
  - Cascaded or segmented TEC (BiTe/PbTe-GeTe)

PARAMETERS	RTG			
	Multi-RTG "Angel" 6 RHU "Angel"	"Improved" RTG INTAS New RHU	RTG-3 New RHU	RTG-4 New RHU 51 W_{heat}
Heat Power, W	51	25	42,6	51
Electric Power, W	2,25	1,36	3,3	4,1
RTG dimensions:				
- diameter, mm	150	150	150	150
- height, mm	200	180	180	180
Mass of RTG, kg	2,1	1	1,4	1,45
Specific Power, W/kg	1,1	1,36	2,36	2,83
TE Converter:	1-cascade	2-segmented	2-segmented	2-segmented
- efficiency, %	5,5	6,5	10	10
RTG efficiency, %	4,4	5,4	7,7	8

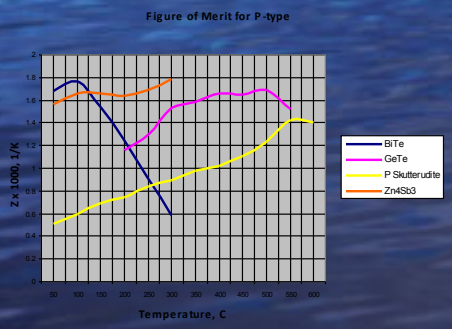

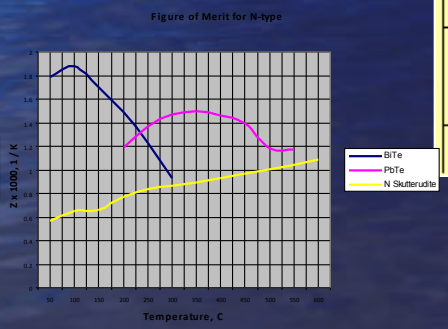

30 Watts

- New RTG concept
  - 300W RHS
  - High temperature (900°C)
  - Cascaded TEC (SiGe/PbTe-GeTe)
  - 5 W/kg

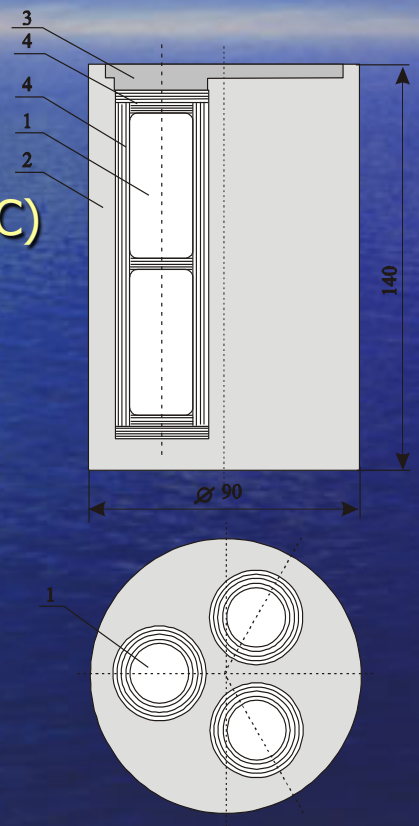

Fig. 5. Design of RHU of 300 W:
1 - RHS-238-50 (6 units); 2 - case; 3 - cover;
4 – heat-insulating inserts

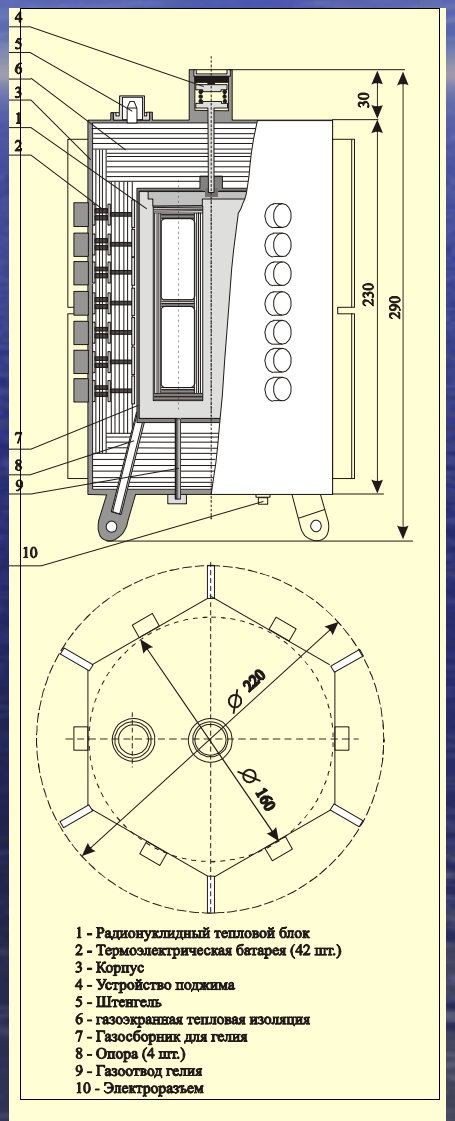

БИАПОС

AREVA

CONCLUSION

- RTGs are a key technology for missions to Jupiter and beyond
- Low power RTGs are affordable by using existing technologies and then do not require huge development in terms of budget or time frame
- But experimentation is necessary to confirm the expected performance and finalise design options
- Medium power RTGs requires a different design, while using existing technologies
- Reminder: nuclear technologies need also safety demonstration and this has to be taken into consideration in the road maps and future missions time schedules