ROTATIONAL SPECTROSCOPY ON PLANETARY PROBES

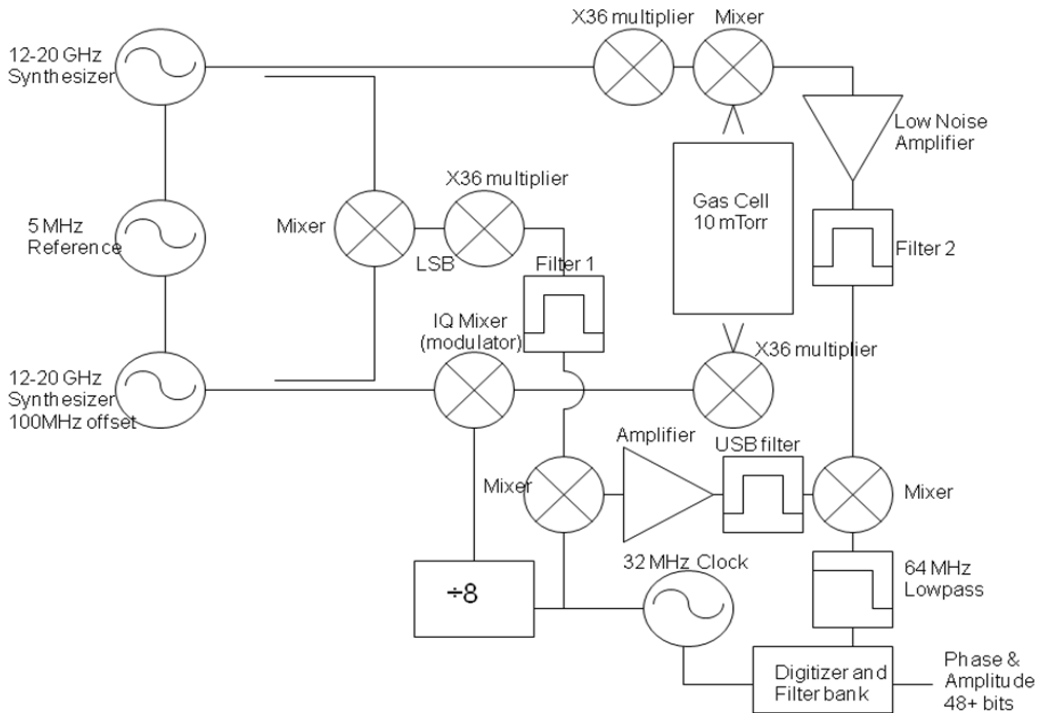

Brian J. Drouin, John C. Pearson, Frank W. Maiwald

Jet Propulsion Laboratory,

California Institute of Technology

Outline

- Background
- Technique
- Laboratory demonstration
  - Testing the tholin hypothesis
- Theory
  - Physics
  - advantages and disdvantages
- Sensitivity
- Ideas and Plans

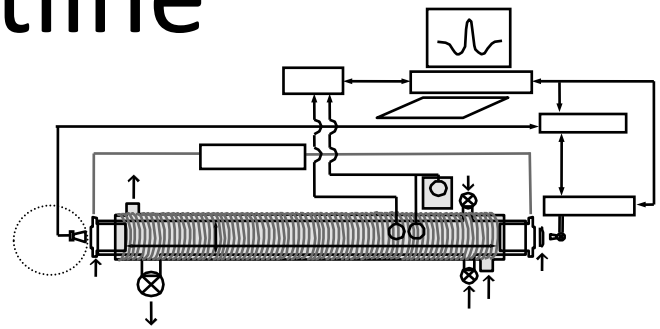

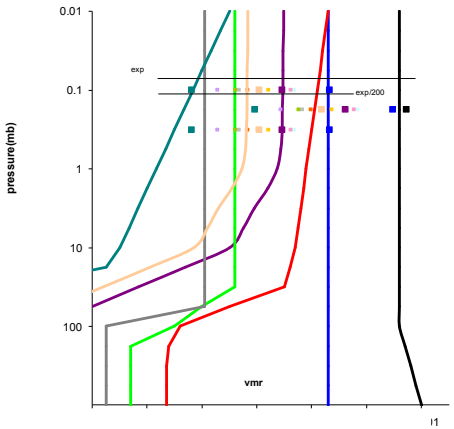

$$\nu_{J'J} = H(J') - H(J);$$

$$H = \left(A - \frac{B+C}{2}\right)K^2 + \left(\frac{B+C}{2}\right)J(J+1) + \left(\frac{B-C}{4}\right)\left[J^{+2} + J^{-2}\right] + \ldots$$

$$A = \hbar / I_{aa}, B = \hbar / I_{bb}, C = \hbar / I_{cc};$$

$$I(T) = \int_0^\infty \alpha_\nu d\nu = \left(\frac{8\pi^3}{3hc}\right)\nu S \mu^2 \left[e^{-E''/kT} - e^{-E'/kT}\right] / Q$$

$$\Delta P_{\min} = kT_{sys} B t^{-1/2}$$

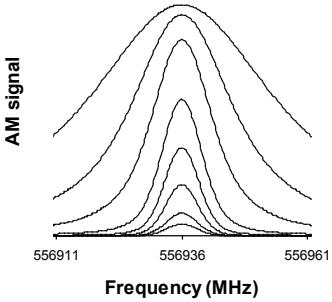

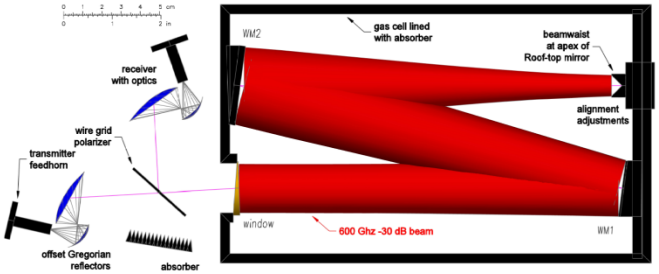

Background

- Remote Emission
  - Earth – UARS MLS, EOS MLS (SMILES, SMLS)
  - ISM – ground-based astronomy (Herschel, ALMA)
  - Planetary ground based astronomy IRAM (ALMA)
- New Species Identification
  - High sensitivity & specificity
- Structural Characterization
  - Isotopic measurements

Spectroscopic Technique

- Dipole/photon interaction
  - Nearly all gas phase species
  - Many strong absorbers
- Direct Absorption spectrometry
  - Highly specific
  - Inherently quantitative
  - Good sensitivity $\Delta I/I$ =1 part 10^9
- Heterodyne absorption spectrometry
  - 10^4 more sensitive than direct
  - Massive dynamic range

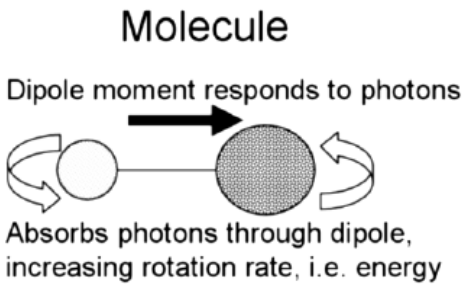

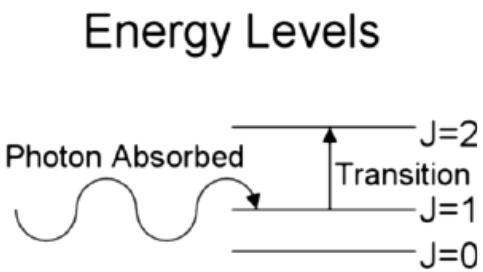

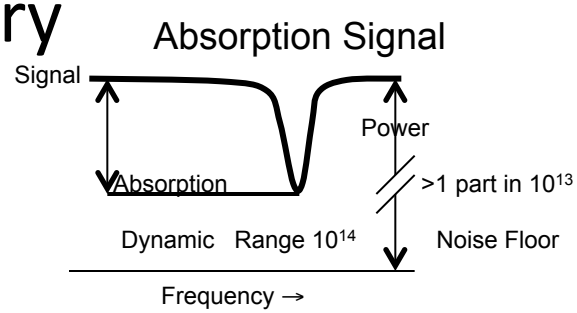

Recent Studies (2005-present)

- Pressure Broadening
  - O_2, HOCl, O_3, HCl, BrO
- Line positions
  - HCO^+, D_2O, C_3H_8, HOCl, $(CH_3)_2CO$, CH^+, N_2O, $HONO_2$, HOONO, $HClO_4$
- Dipole Moments
  - HOONO, $HClO_4$
- Quantitative gas analyses
  - Titan simulation

Laboratory Demonstration

Testing the tholin hypothesis using direct absorption spectrometry

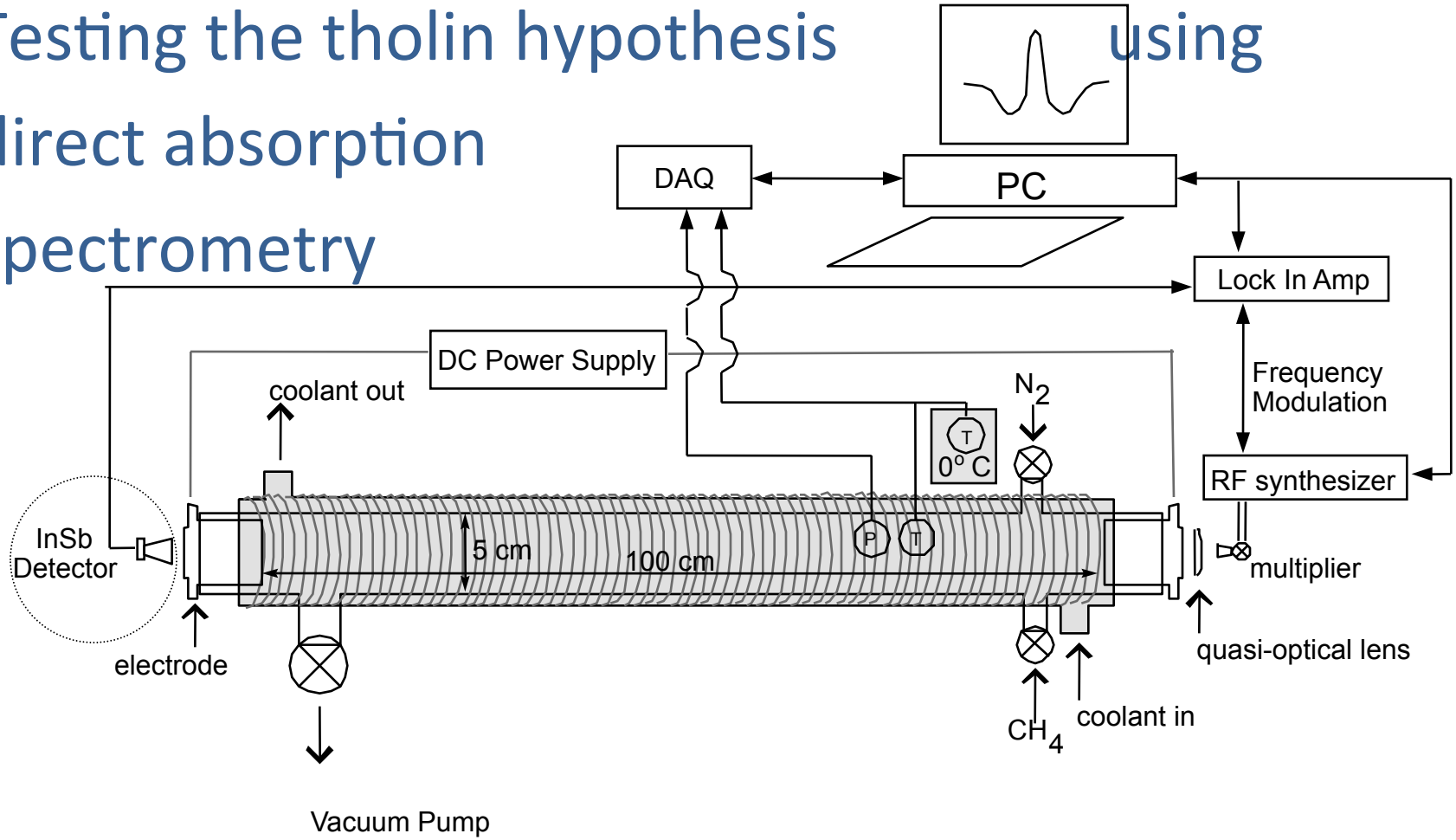

Discharge 97% N_2 and 3%CH_4, analyze plasma at 300 K and 200K

Laboratory Results

- Many CN species
- $HCN:H_2CN:H_3CNH_2:NH_3$
- isocyanides
- [CO] high
- Water on walls
- $[NH_3](T)$
- Strong dose

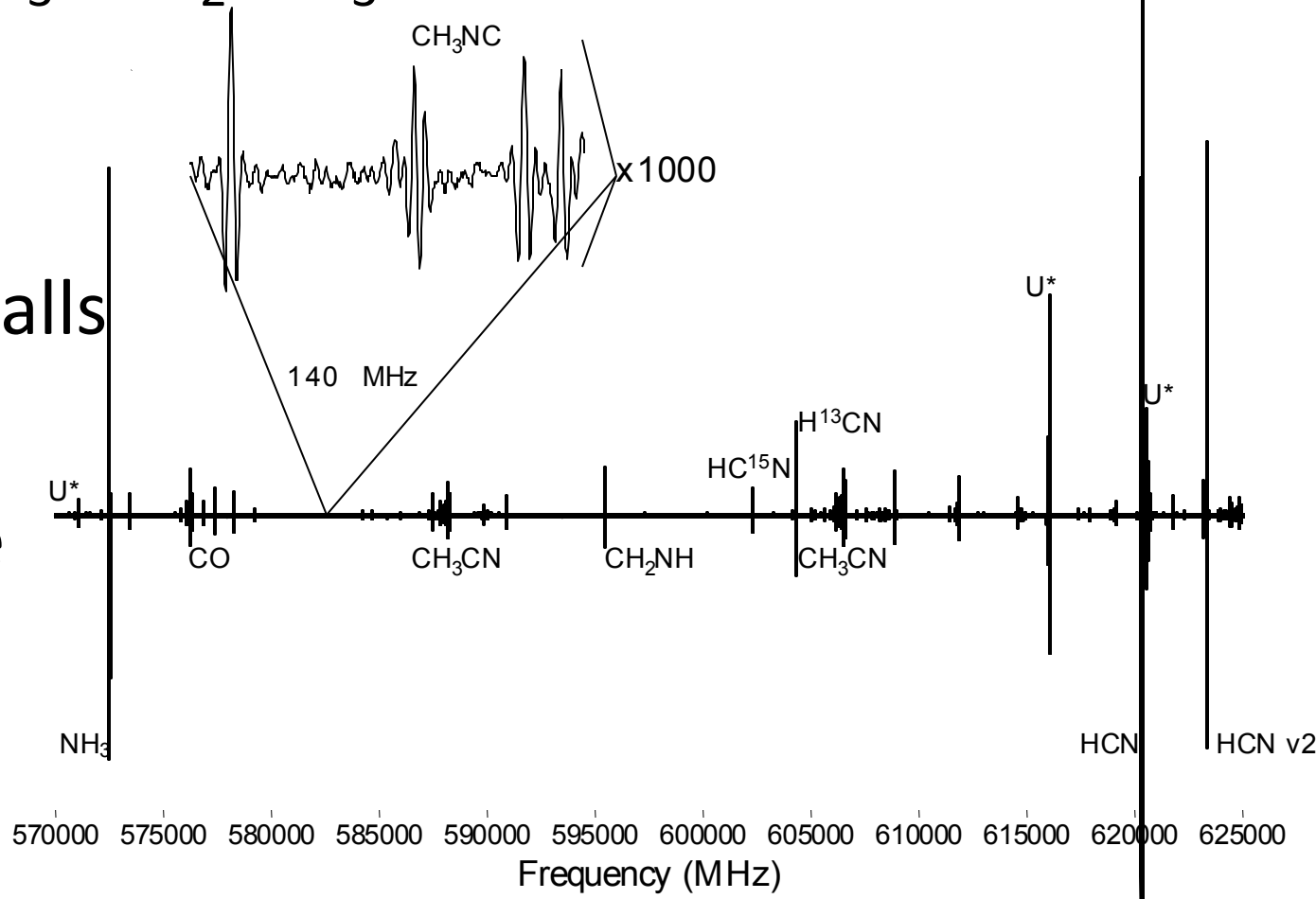

Laboratory Results –Quantitative Comparison to Titan

species	Concentration	comment
CN	4.09 ppm	$N = 7/2, J = 5$
CN	5.10 ppm	$N = 7/2, J = 4$ Harm. Cont.
CO	8.93 ppk	
HCN	161 ppm	From ^{13}C
HCN	160 ppm	From ^{15}N
HNC	3.15 ppm	$J = 5$
HNC	3.25 ppm	$J = 6$
H_2O	449 ppm	on walls too
NH_2	~2.5 ppt	
NH_3	333 ppm	saturated
NH_3	420 ppm	From ^{15}N
H_2CN	9.29 ppm	
HC_2N	~75 ppm	No dipole measurement
C_2N_2	< 160 ppb	no detection (asymmetric form only)
CH_2NH	50.6 ppm	Catalog off 1-50 MHz
HC_3N	~80 ppb	
CH_3CN	23.0 ppm	
CH_3NC	0.73 ppm	Catalog off 5 – 27 MHz
CH_3CH_2CN	< 1 ppm	Not observed at 300 K either

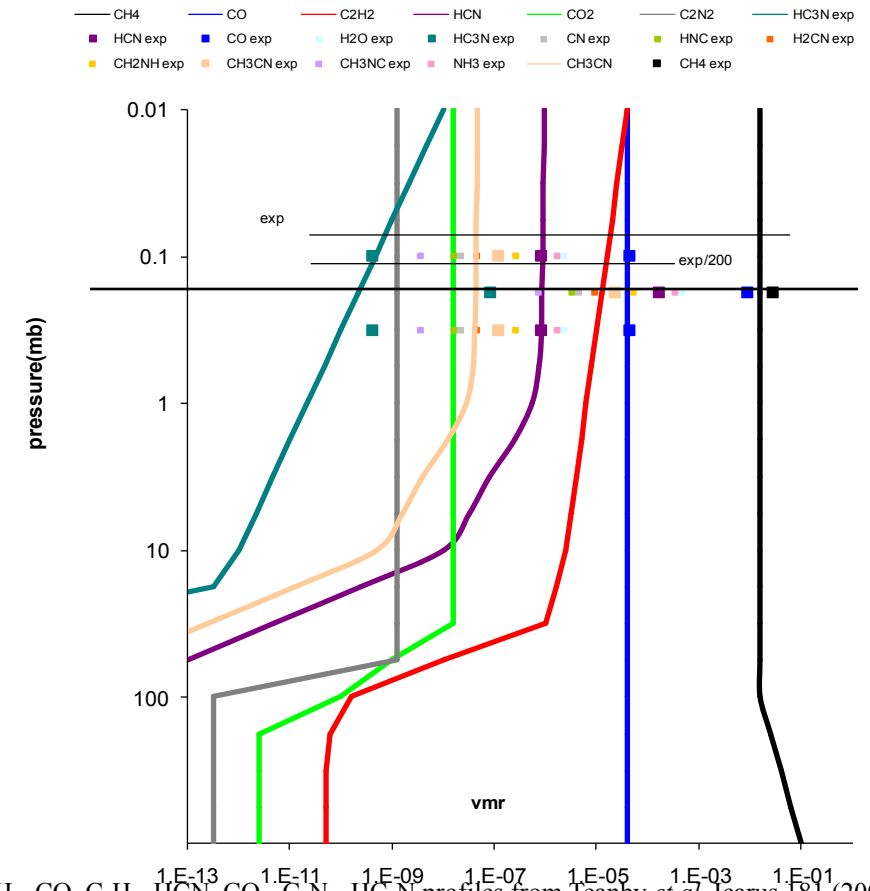

CH_4, CO, C_2H_2, HCN, CO_2, C_2N_2, HC_3N profiles from Teanby *et al.* Icarus 181 (2006) 243-255, CH_3CN profile from Marten *et al.* Icarus 158, (2002) 532-544
experimental data at 0.15 mb is plotted with colored squares arbitrary factor of 200 estimates actual photo-activity level in atmosphere

Current Sensitivities

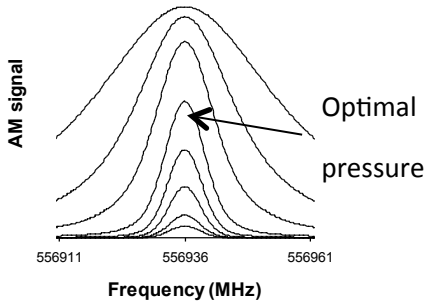

System pressure must be regulated To 10-100 mTorr For optimal sensitivity

This short list of polar molecules identified for study on Mars or Titan and their 10σ detection limits (10 times the minimum power change) for a direct detection system or $\Delta I/I = 10^9$. This assumes a 1 second per point integration time and a 5 meter path length.

Theoretically, a heterodyne system can can achieve equivalent signal/noise with a 10 ms integration time and a 5 cm pathlength, or 10^4 better S/N with equivalent scan parameters

	Mars (240K)		Titan (90K)		
Molecule	Doppler MHz	Limit	Doppler MHz	Limit	f GHz
H2O	**0.728**	**38 ppT**	**0.446**	**2.9 ppT**	557
NH3	0.770	192 ppT	**0.472**	**12 ppT**	572
HCN	0.662	7.8 ppT	**0.406**	**1.4 ppT**	620
HNC	0.677	7 ppT	**0.415**	**1.2 ppT**	635
HCl-35	**0.571**	**72 ppT**	0.350	5.7ppT	626
H2CO	**0.640**	**68 ppT**	0.392	16.2 ppT	632
CH3CN	0.271	95 ppT	**0.166**	**18 ppT**	313
H2O2	**0.563**	**205 ppT**	0.345	34 ppT	591
OCS	**0.200**	**540 ppT**	0.123	130 ppT	280
SO2	**0.438**	**795 ppT**	0.268	70 ppT	632
CH3CH2CN	0.174	437 ppT	**0.107**	**89 ppT**	233
PH3	**0.508**	**1.4 ppB**	0.311	79 ppT	533
O3	**0.453**	**4 ppB**	0.278	1.7 ppB	566
CO	**0.604**	**5.5 ppB**	**0.370**	**698 ppT**	576
O2	**0.417**	**5 ppM**	0.255	439 ppB	424
CH3D	**0.626**	**23 ppM**	**0.383**	**1.3 ppM**	465

Theory

- Molecular line positions and intensities are well known from lab studies and the most interesting species are catalogued at http://spec.jpl.nasa.gov & http://www.ph1.uni-koeln.de/vorhersagen/

$$\nu_{J'J} = H(J') - H(J);$$

$$H = \left(A - \frac{B+C}{2}\right)K^2 + \left(\frac{B+C}{2}\right)J(J+1) + \left(\frac{B-C}{4}\right)\left[J^{+2} + J^{-2}\right] + \ldots$$

$$A = \hbar / I_{aa}, B = \hbar / I_{bb}, C = \hbar / I_{cc};$$

$$I(T) = \int_0^\infty \alpha_\nu d\nu = \left(\frac{8\pi^3}{3hc}\right)\nu S \mu^2 \left[e^{-E''/kT} - e^{-E'/kT}\right] / Q$$

A,B & C are inverse moments of inertia in energy units, J & K are rotational quanta

α is the absorption cross-section which consists of dipole moment (μ), direction cosine (S) and Boltzmann factor with partion function (Q)

- Heterodyne techniques are commonly used for passive molecular detection and active communications

$$\Delta P_{\min} = kT_{sys} B t^{-1/2}$$

T_{sys} is the system temperature in Kelvin,
B is the post detection bandwidth in Hz and
t the integration time

Direct *vs.* Heterodyne

- The direct absorption (DA) technique is already demonstrated in the lab
  - Miniaturization still needed
  - Simple system integration

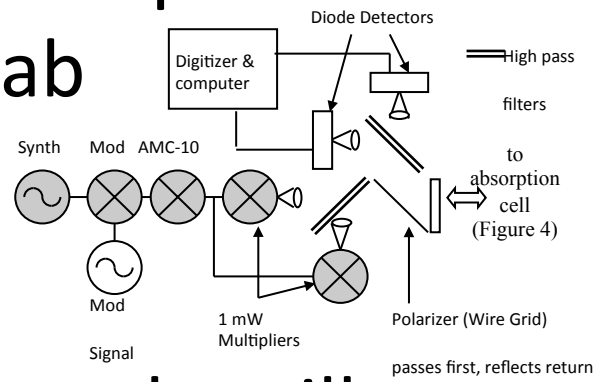

- DA requires only one fundamental oscillator
  - Approximately 4W

PIDDP 2006 selectable!

- DA does not require filter banks

Direct *vs.* **Heterodyne**

- Heterodyne is shot noise limited
- Higher sensitivity improves science and minimizes footprint of absorption cell
- Non-bridge system incorporating digital poly-phase filter banks must be demonstrated
- Requires two synthesizers and back-end power ~10W

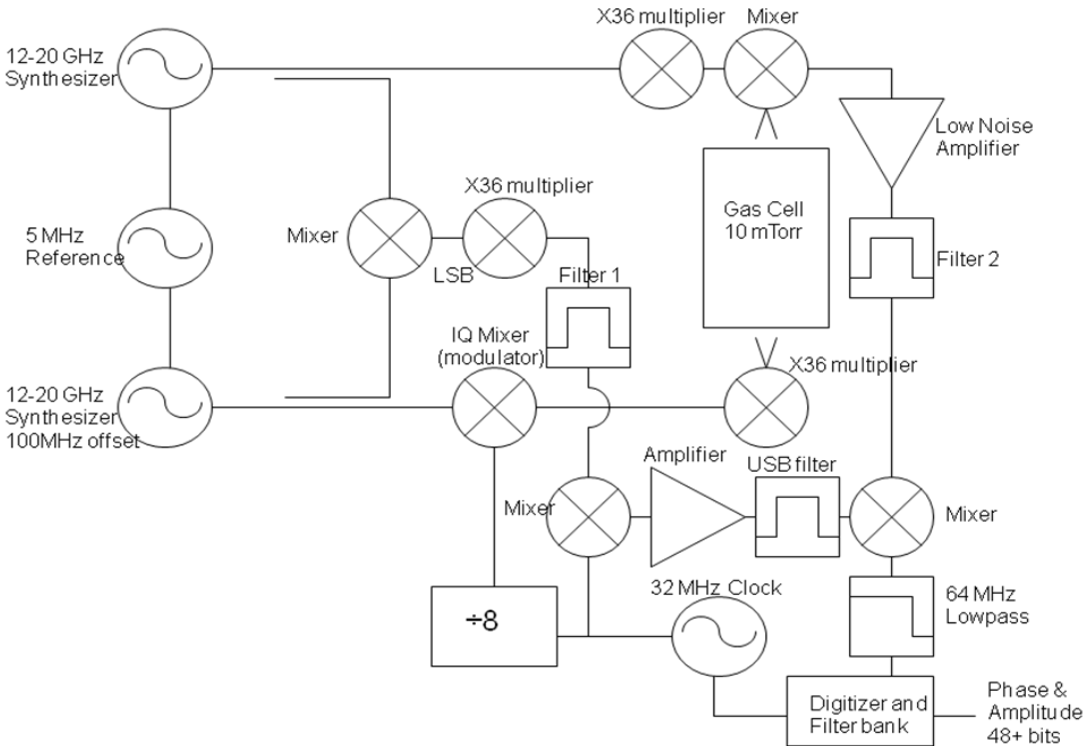

Sensitivity Comparison

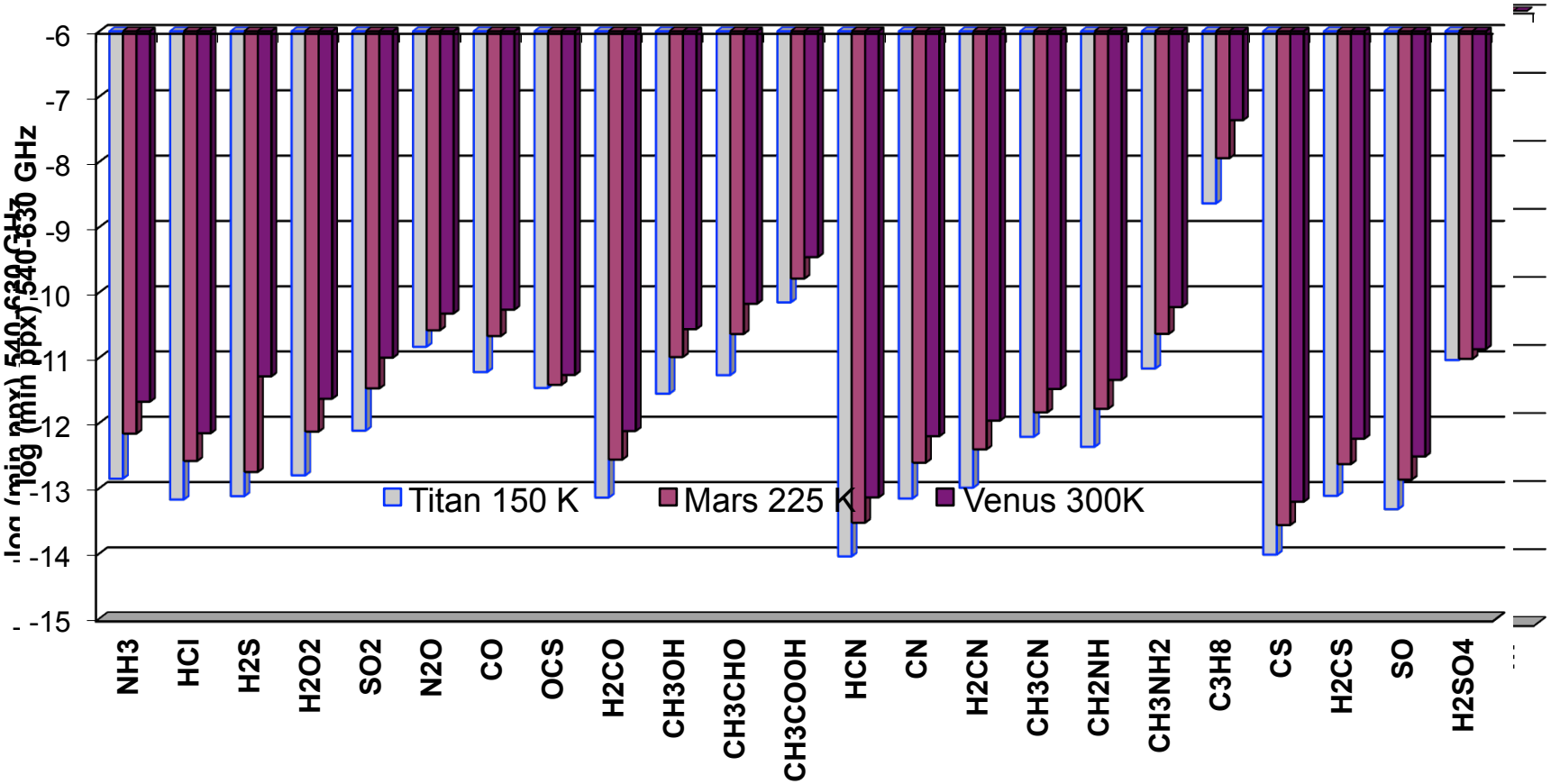

Ideas and Plans

- Currently pursuing funding for
  - Mars surface mission
  - Europa simulator
  - remote instruments:
    - Limb sounders
    - Radar spectrometers

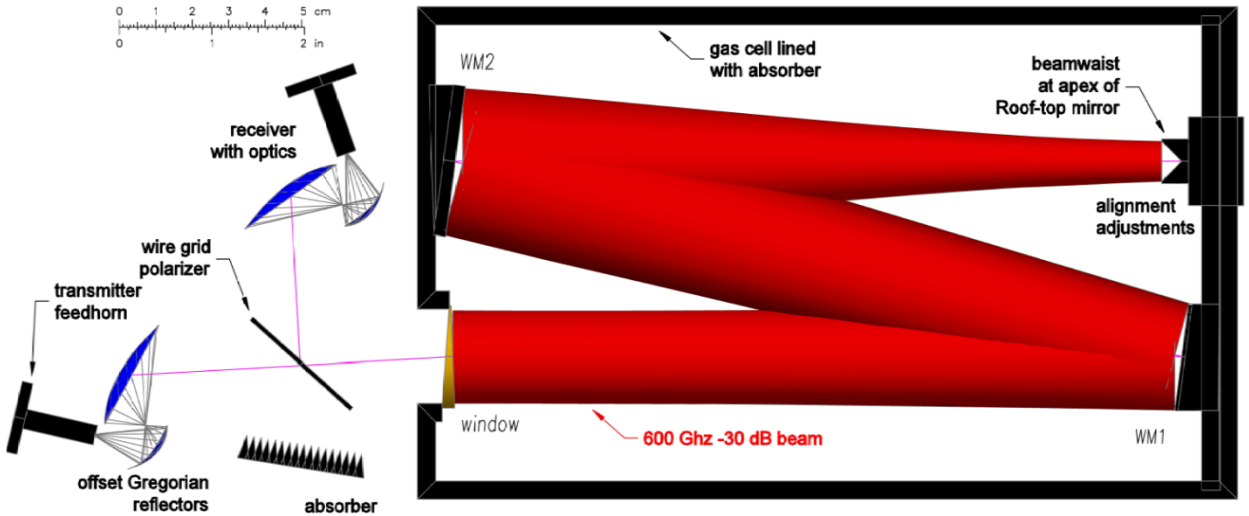

Conclusion

- ***This instrument can detect millions of different gas phase molecules and their isotopic variants and uniquely identify and quantify every single one.***
- ***The technique is old, but new hardware (mostly TRL6) has enabled new, high fidelity applications in space environments***
- ***Systems integration, miniaturization and testing are required***

Acknowledgements

- JPL Research and Technology Grant
- JPL instrument development funds
- Robert Hodyss
- Engineering staff
  - Peter Siegel
  - Robert Dengler
  - Ken Cooper
  - Rick Cofield
- Administrative Support
  - Pat Beauchamp

$$