Mars Sample Return Using Commercial Capabilities: Concept for the Earth Return Vehicle Trajectory and Related Capture Requirements

Nicolas Faber, Cyrus Foster, David Willson, Andrew Gonzales, Carol Stoker, NASA Ames Research Center, Moffett Field, CA

Abstract

Mars Sample Return has been selected as the highest priority planetary science mission of the next decade. This paper gives detail on the earthbound return segment of the MSR concept recently introduced by Lemke et al (2013) and reports on ongoing work not given in that paper for the sake of conciseness. In particular, we describe the current concept for both the return trajectory of the Earth Return Vehicle (ERV) to Earth orbit and the sample retrieval operations in Earth orbit required to bring back the Martian samples to the surface of Earth.

I. Introduction

A Mars Sample Return (MSR) mission is the highest priority science mission for the next decade as recommended by the recent Decadal Survey of Planetary Science[1]. However, the Mars Sample Return mission study that supported the 2010 Decadal Survey report was rejected for flight as being unaffordable due to the complex series of missions required to accomplish it. Recently, NASA Ames has performed a study of Mars Sample Return mission that examined using emerging commercial capabilities to land the sample return elements, with the goal of reducing mission cost. The study results are described in Lemke et al. 2013 [2]. They examined the following scenario for MSR : A Falcon Heavy launcher injects a SpaceX Dragon crew capsule and trunk onto a trans Mars Injection trajectory. The capsule is modified to carry all the hardware needed to return samples collected on Mars including a Mars Ascent Vehicle (MAV), an Earth Return Vehicle (ERV) and Sample Collection and Storage hardware. The Dragon descends to land on the surface of Mars using SuperSonic Retro Propulsion (SSRP) as described by Braun and Manning[3]. After samples are obtained and stored in the ERV, the MAV launches the sample-containing ERV from the surface of Mars. A later mission, possibly a crewed Dragon launched by a Falcon Heavy retrieves the sample container spacecraft from Earth orbit. The retrieving

spacecraft packages the sample and performs a controlled Earth re-entry to prevent Mars materials from accidentally contaminating Earth.

This paper presents a sub-element of the above MSR mission concept in which the samples are returned directly from the surface of Mars to Earth orbit, instead of being transferred between spacecraft in Low Mars Orbit[4]. Our focus is on the earthbound return segment of the MSR mission and we start from the assumption that the MAV has successfully placed into a parking orbit around Mars the ERV carrying the samples within a canister built for that purpose. We report on ongoing work not given in [2], namely on the concept of the return trajectory of the ERV to Earth orbit and the sample retrieval operations in Earth orbit involving a rendezvous of the ERV with the chaser capsule.

Bringing samples from Mars to Earth for study involves a risk of contamination of Earth's biosphere with materials that may prove hazardous to it. This is why the constraint of Planetary Protection (PP) occupies a central point in the design process of the earthbound leg and acts as a major driver for the selection of one concept over another. The legal provisions for PP are set out by the United Nations [5] and by the COSPAR Planetary Protection Policy [6] and the law is adopted on US level through the NASA Policy Directive 8020.7 [7] and the NASA Procedural Requirements 820.12D [8]. Table 1 gives an overview of the classification of interplanetary missions regarding requirements for PP. The MSR mission is classified as a Category V (restricted) mission posing a potential threat to Earth in terms of contamination mainly because microbial life on Mars capable of growing on Earth cannot be excluded at the present state of knowledge. The following measures of PP are particularly important for the design of the return leg of a MSR mission:

1. "break the chain-of-contact": the necessity for containment of any material from Mars and any hardware that entered into contact with Mars, including Martian atmosphere, during the capture of that material;

2. "avoid catastrophic reentry": the absolute prohibition of sample canister breakup in case of collision with Earth upon return;

3. "isolation": the necessity to isolate the samples from Earth's biosphere after arrival on Earth.

Planetary Targets/Locations	Mission Type	Mission Category
Undifferentiated, metamorphosed asteroids; Io; others TBD.	Flyby, Orbiter, Lander	I
Venus; Earth's Moon; Comets; non-Category I Asteroids; Jupiter; Jovian Satellites (except Io and Europa); Saturn; Saturnian Satellites (except Titan and Enceladus); Uranus; Uranian Satellites; Neptune; Neptunian Satellites (except Triton); Kuiper-Belt Objects (< 1/2 the size of Pluto); others TBD.	Flyby, Orbiter, Lander	II
Icy satellites, where there is a remote potential for contamination of the liquid-water environments, such as Ganymede (Jupiter); Titan (Saturn); Triton, Pluto and Charon (Neptune); others TBD.	Flyby, Orbiter, Lander	II*
Mars; Europa; Enceladus; others TBD (Categories IVa-c are for Mars).	Flyby, Orbiter	III
	Lander, Probe	IV(a-c)
Venus, Moon; others TBD: "unrestricted Earth return"	unrestricted Earth-Return	V (unrestricted)
Mars; Europa; Enceladus; others TBD: "restricted Earth return"	restricted Earth-Return	V (restricted)

Table 1: Classification of interplanetary missions by the COSPAR Planetary Protection Policy.

II. Trajectory Concept

In the following we show the concept for the ERV trajectory outlined in [2] as well as the trajectory selected for the mission to retrieve the samples from the ERV in Earth orbit.

A. Requirements

The goal of the ERV is to perform the necessary maneuvers to transfer from the MAV drop-off point to a parking orbit around Earth for later sample retrieval. We start from the assumption that the ERV's initial orbit is a 100 x 250 km orbit around Mars following MAV burnout at 100 km altitude. The final parking orbit around Earth must be high enough to prevent accidental atmospheric entry of the samples and must require a minimum amount of ΔV from the ERV to ensure overall mission feasibility[1].

Finally, to take into account PP regulations and to avoid the risk of contamination of Earth's atmosphere, we set the constraint that the ERV is at no point at an altitude lower than 1200 km with respect to Earth's surface during potential flybys. We thereby adopt similar safety measures as taken by the Cassini mission. In that mission the Earth flyby altitude was restricted to 1171 km due to contamination concerns of Earth's atmosphere by its Radioisotope Thermal Generator [9].

[1] While the ERV is designed to accommodate the ΔV required to complete its mission, the total wet mass must be low enough to be launched from a Dragon capsule landed on Mars.

B. ERV Trajectory

The proposed ERV trajectory design is to perform trans-Earth injection burn after circularizing in low Mars orbit, followed by an interplanetary cruise and subsequent powered Earth flyby for capture into the Earth-Moon system. A final lunar gravity assist circularizes the ERV's trajectory into a Moon-trailing parking orbit.

The first part of the trajectory is shown in Figure 1. The MAV delivers the ERV to an altitude of 100 km around Mars and with sufficient velocity to achieve an altitude of 250 km half an orbit later (100 x 250 km orbit). At 250 km apoapsis, the ERV performs its first maneuver (ΔV = 37 m/s) to circularize to a 250 x 250 km orbit with lifetime > 180 days. The circularization places the ERV in a stable orbit for possible contingency scenarios that prevent a trans-Earth Injection maneuver from taking place, but it only need remain in the temporary orbit for less than one revolution.

At the appropriate phase angle in the 250 x 250 km orbit, the ERV then performs a trans-Earth Injection maneuver ($\Delta V \approx$ 2,200 m/s) to escape Mars and target Earth interception 0.75-1 year later. During cruise from Mars to Earth, the ERV will perform small trajectory correction maneuvers as necessary to target the desired Earth arrival conditions. Maneuver commands can be uploaded to the spacecraft from Earth after processing ground-based radio-tracking data, as is currently done for most interplanetary spacecraft.

Upon arrival at Earth, the ERV performs a propulsive flyby at 1200 km altitude for capture into the Earth-Moon system (ΔV = ~550 m/s). A low flyby minimizes ΔV, so the minimum allowable altitude of 1200 km is picked for this maneuver. Earth flyby geometry is picked such that the ERV will then coast towards the Moon for a free lunar gravity assist that places the ERV in a Moon-trailing orbit (see Figure 2). A final small circularization burn completes insertion into the ERV's final Moon-trailing parking orbit where it awaits a subsequent mission to retrieve its cargo of Mars samples.

In the contingency scenario where the ERV does not arrive at Earth at the pre-planned time, it is possible to insert into the ERV in a temporary highly elliptical orbit around Earth for a small number of revolutions before targeting a free lunar gravity assist and insertion into a Moon-trailing orbit.

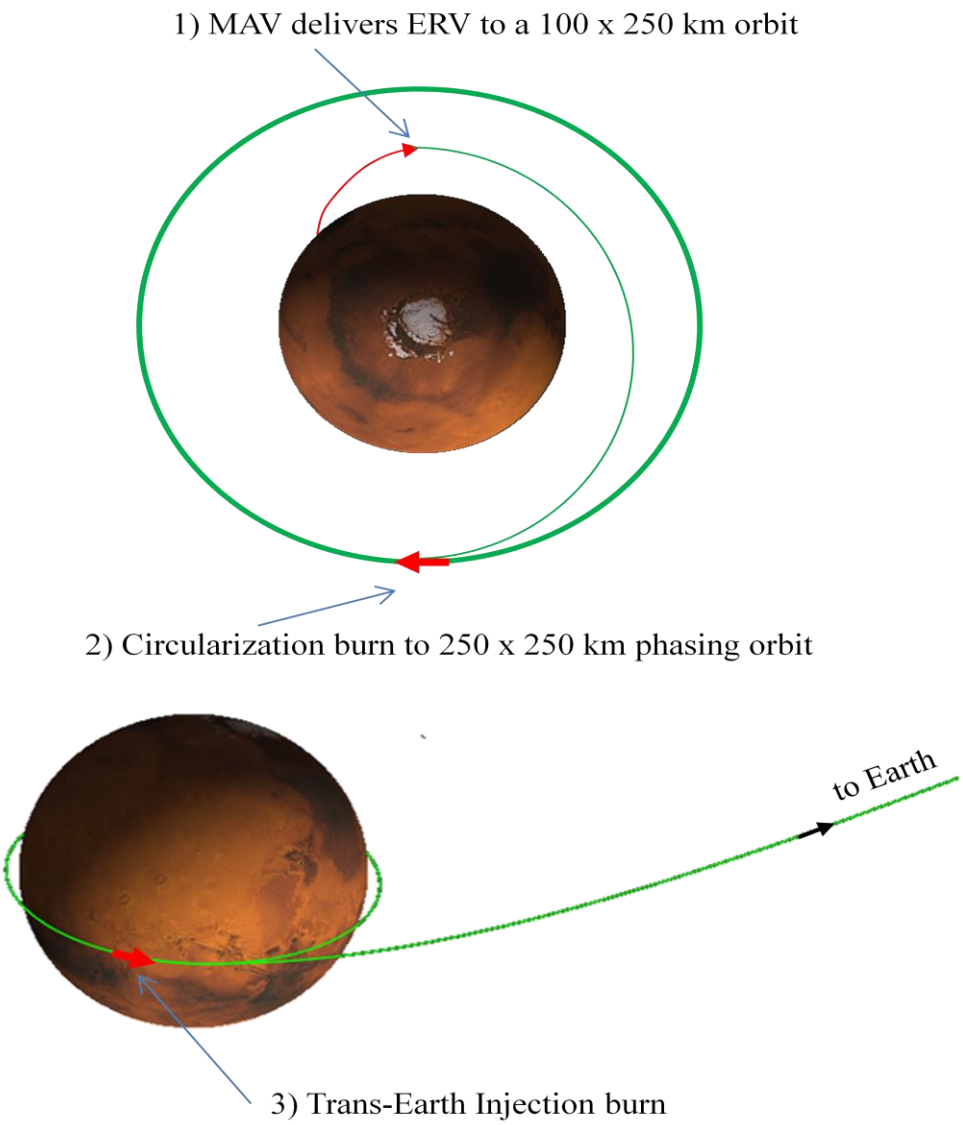

Figure 1: ERV arrival in Earth-Moon system and circularization to Moon-trailing orbit.

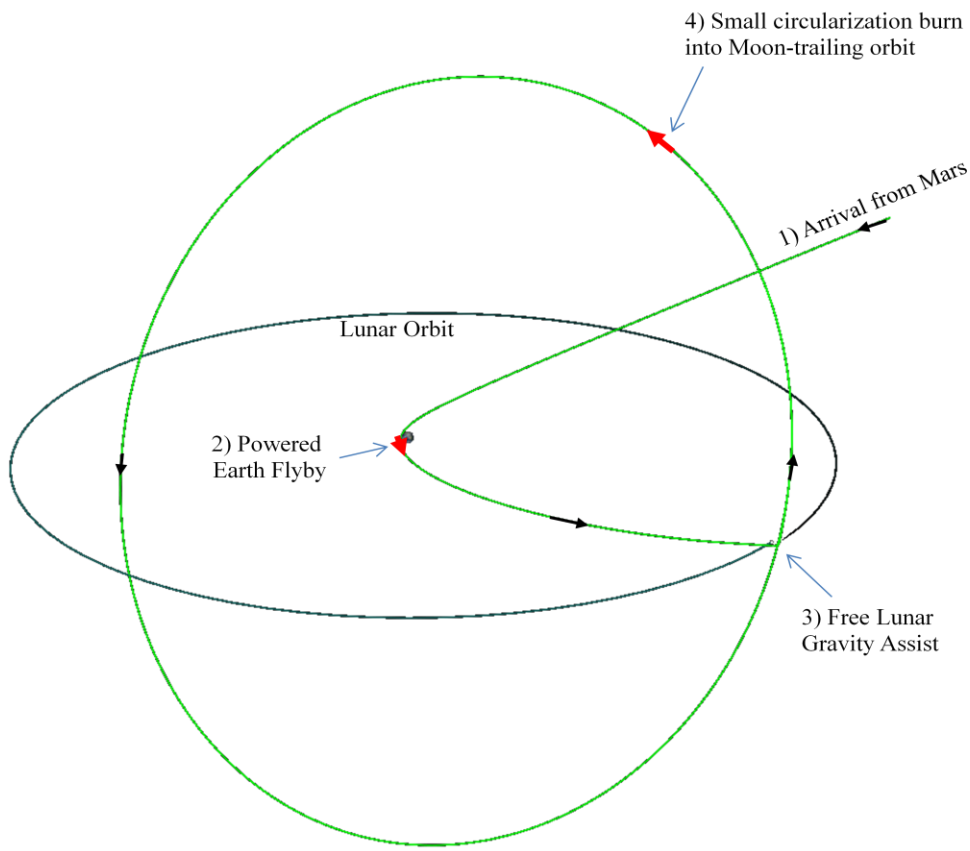

Figure 2: ERV arrival in Earth-Moon system and circularization to Moon-trailing orbit.

Table 2 lists the ΔV breakdown of the ERV trajectory for three possible return opportunities for Mars departure dates in 2024, 2026 and 2028. Trajectories are optimized for lowest total ΔV per 2.2-yr Earth-Mars synodic period and include gravity losses.

Mars Departure Date	Jul-24-2024	Jul-23-2026	Jul-20-2028
Earth Arrival Date	May-25-2025	Jun-05-2027	Jul-11-2029
ΔV Circularization to 250x250 km Mars orbit	37 m/s	37 m/s	37 m/s
ΔV trans-Earth Injection	2,253 m/s	2,123 m/s	2,135 m/s
ΔV Trajectory Correction Maneuvers	75 m/s	75 m/s	75 m/s
ΔV Powered Earth Flyby	491 m/s	513 m/s	642 m/s
ΔV Circularization to Moon-trailing orbit & long-term care	25 m/s	25 m/s	25 m/s
Subtotal ΔV	2,881 m/s	2,773 m/s	2,914 m/s
8% ΔV Contingency	230 m/s	222 m/s	233 m/s
Total ΔV	**3,111 m/s**	**2,995 m/s**	**3,147 m/s**

Table 2: Summary Earth Return Vehicle (ERV) ΔV budget.

C. Rendezvous Mission Trajectory

A subsequent mission is necessary to retrieve the Martian samples from the ERV and bring them back to Earth. We plan to have a chaser capsule rendezvous with the ERV to capture the samples and bring them to the surface of Earth in a controlled reentry. To avoid the need for high-ΔV plane change and circularization maneuvers to go the Moon-trailing orbit of Figure 2, the mission may launch from Earth on a trans-Lunar Injection (TLI) trajectory and perform a non-propulsive lunar flyby similar to the one of Figure 2 to meet with the ERV. The trajectory is depicted in Figure 3.

The requirements for the physical transfer of the samples between the two vehicles as well as the related concept of operations are detailed in Section III. After the samples have been acquired, the capsule has the option to target another lunar gravity assist for a low-ΔV return that may be of interest for non-crewed missions. Alternatively, if the mission is crewed and a shorter inbound leg is required, it is possible to perform a direct return maneuver requiring a ΔV≈ 900 m/s that can be imparted at any point after the lunar flyby. For the outbound leg and both inbound leg options of the sample retrieval mission, orbit inclination is constrained in a way to have a traverse through the Van Allen belts of similar or smaller magnitude than achieved during the Apollo missions.

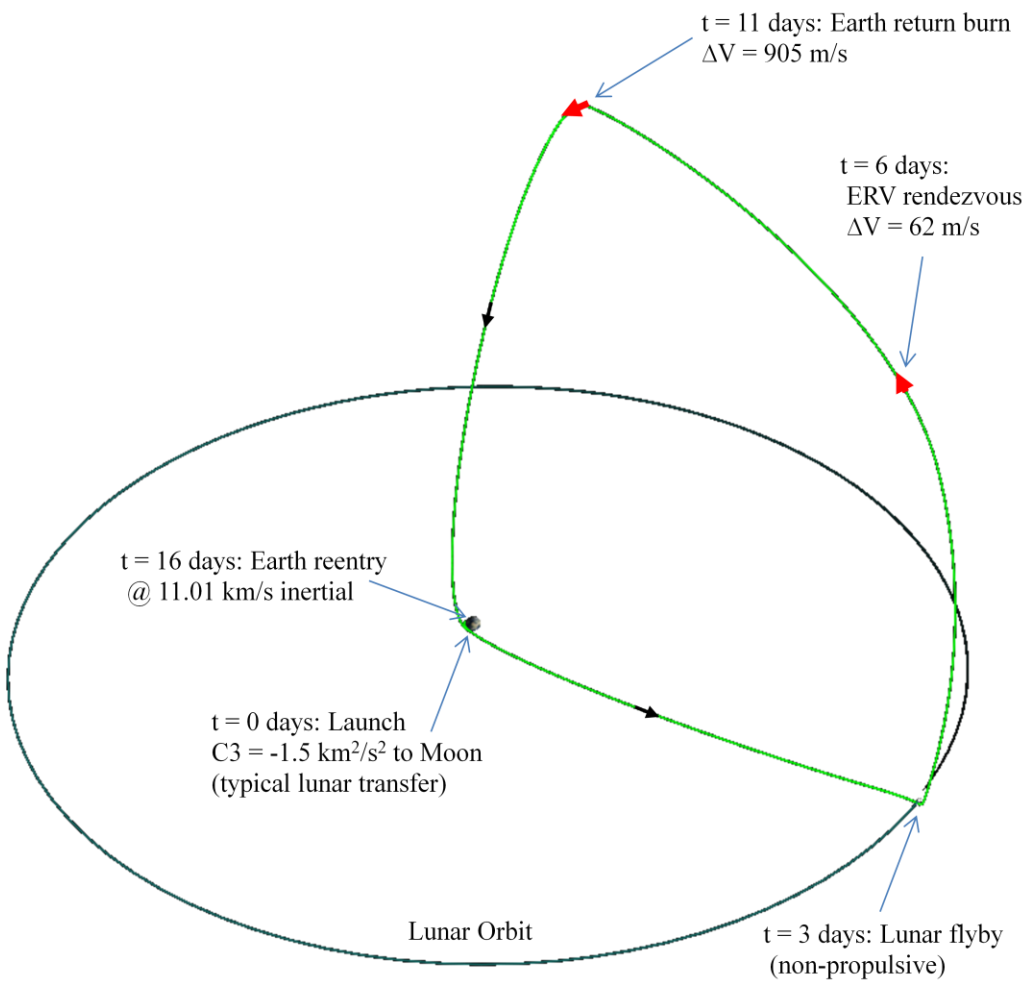

Figure 3: Trajectory launching from Earth to retrieve Mars sample from ERV.

III. Sample Retrieval Concept

We start by providing requirements and basic design specifications of the ERV. We then expand on the concept for the sample retrieval.

A. Requirements

The requirement is to transfer the Martian samples from the ERV to a chaser capsule during a dedicated rendezvous in the Moon-trailing Earth orbit. The concept shall ensure overall mission feasibility in terms of the accuracy required during proximity operations between the two vehicles. Necessary provisions for PP shall be implemented whenever required.

B. Schematic View of ERV and Sample Canister

At the present stage no point design of the ERV is available. A conceptual sketch is given in Figure 4. The ERV is a small spacecraft with a cylindrical form factor. It has a diameter of about 0.8m and a height of approximately 0.65m. The current estimate for its mass is between 60kg and 90kg of which about 5kg are allocated to the payload canister carrying the samples from Mars. The sample canister is mounted centrally towards the apex of the spacecraft and located in front of the propellant tanks. The ERV is equipped with a reaction wheel to control the attitude of the spacecraft and to avoid potential tumbling during proximity operations. Key data is summarized in Table 3.

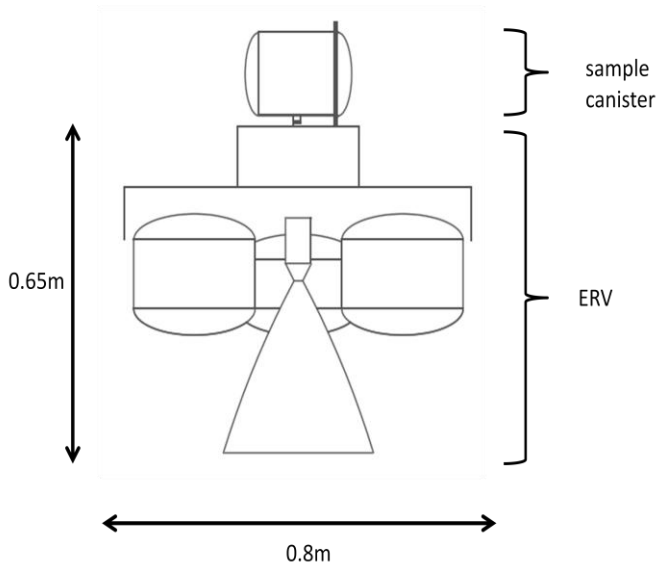

Figure 4: Sketch of the ERV.

Diameter	80cm
Height	65cm
Mass	60kg-90kg
Sample canister mass	5kg
Sample canister dimensions	12cm
Sample canister height	20cm

Table 3: Basic ERV design specifications.

C. Sample retrieval

1. Concept

The basic idea is to perform a free-flying robotic grappling of the sample canister of Figure 4 and to store the latter within a sealed container along with all the equipment needed to perform the grappling.

a) Sealed container

The sealed container is mounted at the top of the sample retrieval capsule. Figure 5 gives a basic cross-section of the sealed container and Figure 6 depicts the integration of the container with the chaser capsule. The top hatch of the unmodified capsule is replaced by a metal plate into which the sealed container has been welded.

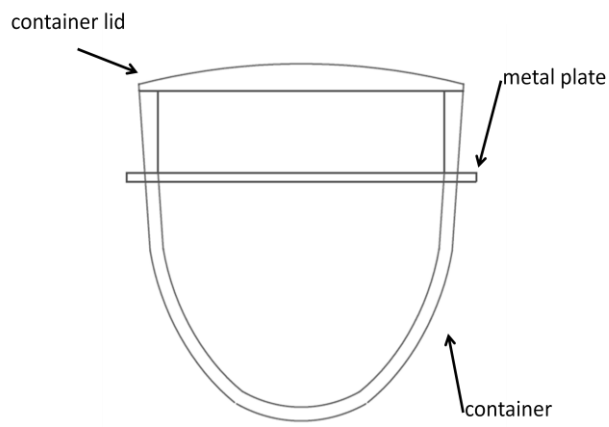

Figure 5: Cross-section of a sealed container welded into a metallic plate.

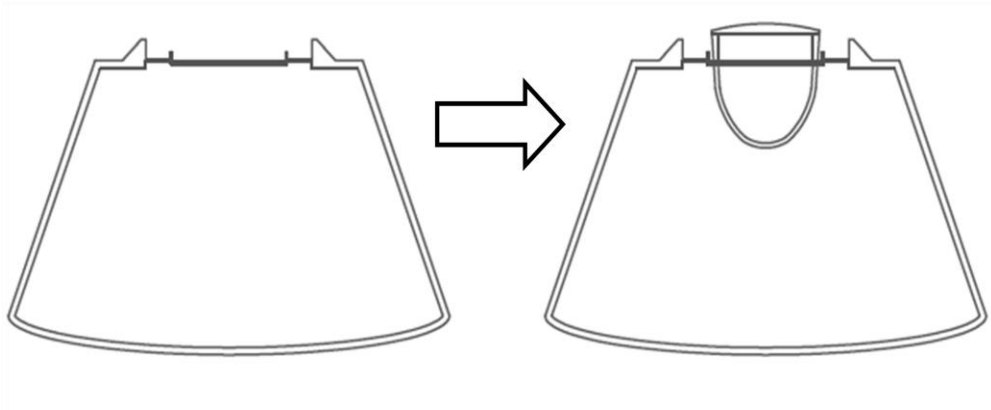

Figure 6: Cross-section of the sample retrieval capsule. The top hatch of the capsule is replaced by the structure of Figure 5.

The upper base of the container has a cylindrical form factor and the overall volume is large enough to harbor the ERV entirely[2]. The shape of the container narrows down towards the bottom in order to minimize loads that may arise during capture operations due to pressure differences with the main capsule (see also Section III.C.2 for more information on this). The container has a lid that can be opened and closed remotely from a ground segment Telemetry, Tracking and Command (TT&C) unit or locally from inside the pressurized module of the capsule.

The container caters for the three requirements of PP mentioned earlier.

1. "break the chain-of-contact": We recall that, on the ERV, the samples are stored in the sample canister of Figure 4 to provide a first layer of sealing against contamination hazards due to unsterilized material from Mars[10]. However, this protection is not sufficient since the outer surface of the sample canister has been in contact with the Martian environment. The main purpose of the capture container is thus to break the chain-of-contact with Mars by adding a second layer of protection and acting as a biobarrier. The container encloses any materials from Mars and any hardware that has been in contact with these materials. The external surfaces of the capsule, possibly polluted with residual particles from Mars as a consequence of the sample transfer, are heated to a temperature of about 1,500 degrees upon reentry which ensures their natural sterilization.
2. "catastrophic reentry": In case of catastrophic reentry of the main capsule, breakup of the container must be avoided by all means. It is planned to equip the container with its own heat shield and a sufficiently resistant bulk structure to withstand reentry loads even after disintegration from the rest of the capsule. As such the container can be considered as an independent miniature capsule designed as a backup to survive even the most catastrophic of all events.
3. "isolation": After landing on Earth, the container ensures the samples remain isolated from Earth's biosphere. Although not part of this design, it will be necessary to separate the capture container from the bulk structure of the capsule in order to bring the samples under quarantine as soon as

[2] Note that in our notional concept of operations of Section III.C.1.c) we do not intend to accommodate the entire ERV in the container. The sizing of the container is designed in a way to harbor the entire ERV only in case of contingency operations.

possible. The end-to-end procedure needed for handling the samples after arrival on Earth is out of the scope of this paper.

A further design driver of the concept of Figure 6 has been the concern for flexibility in the selection of the chaser capsule. The concept takes advantage of the fact that the basic design and sizing of the top hatch is similar for all the capsules currently built due to the general requirements set out for docking to the ISS [11]. Mounting the container structure of Figure 5 atop the chaser capsule should therefore be a relatively straightforward task, independently of the final design of the chaser vehicle. In this sense, the concept encourages open competition between public and private sector capsule manufacturers and allows for flexibility and resiliency in the scheduling of the sample retrieval mission.

b) Robotic arm

To physically capture the samples during the rendezvous a robotic arm is installed inside of the container. The design of the arm is comparable to the one used on the Shuttle and ISS **[12]** and is depicted in Figure 7.

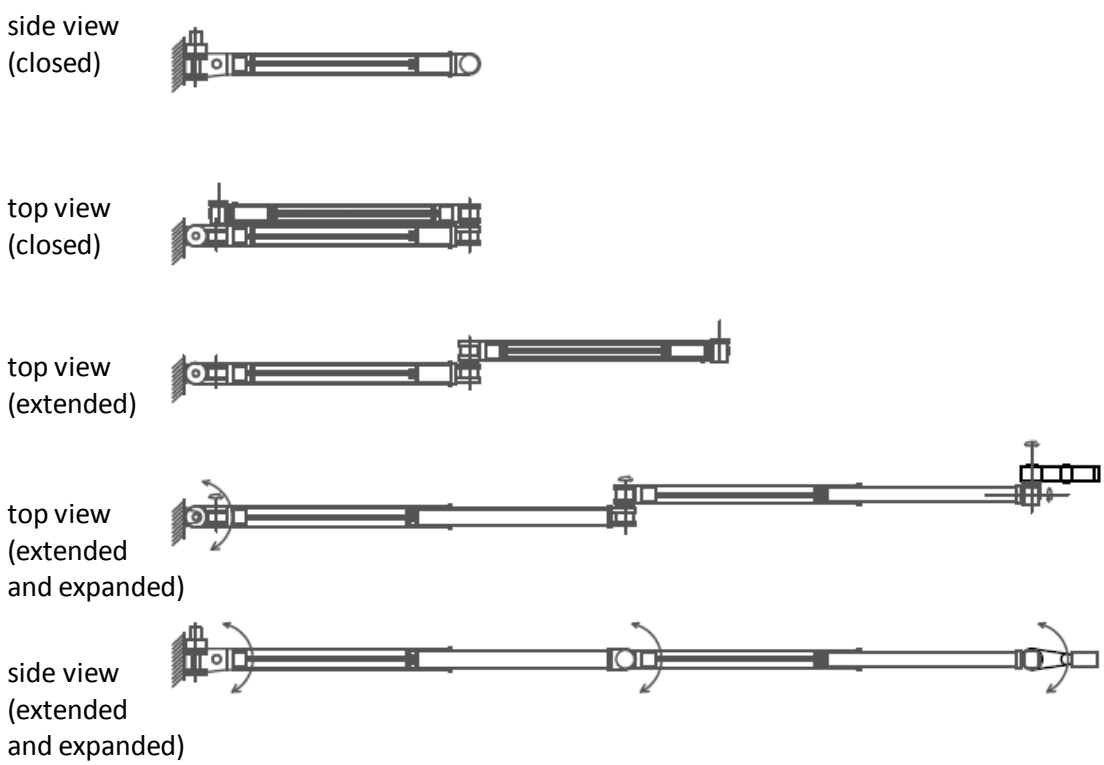

Figure 7: Robot arm used for grappling the sample canister. The arm is installed inside the container shown in Figure 5 and Figure 6.

The arm has 7 degrees of freedom including 2 expandable/retractable segments to increase overall reach to about 3m and a snare end effector. It is the same type of arm used elsewhere in our Mars Sample Return concept for the sample transfer on Mars between the sample acquisition rover and the MAV[10].

c) Concept of Operations

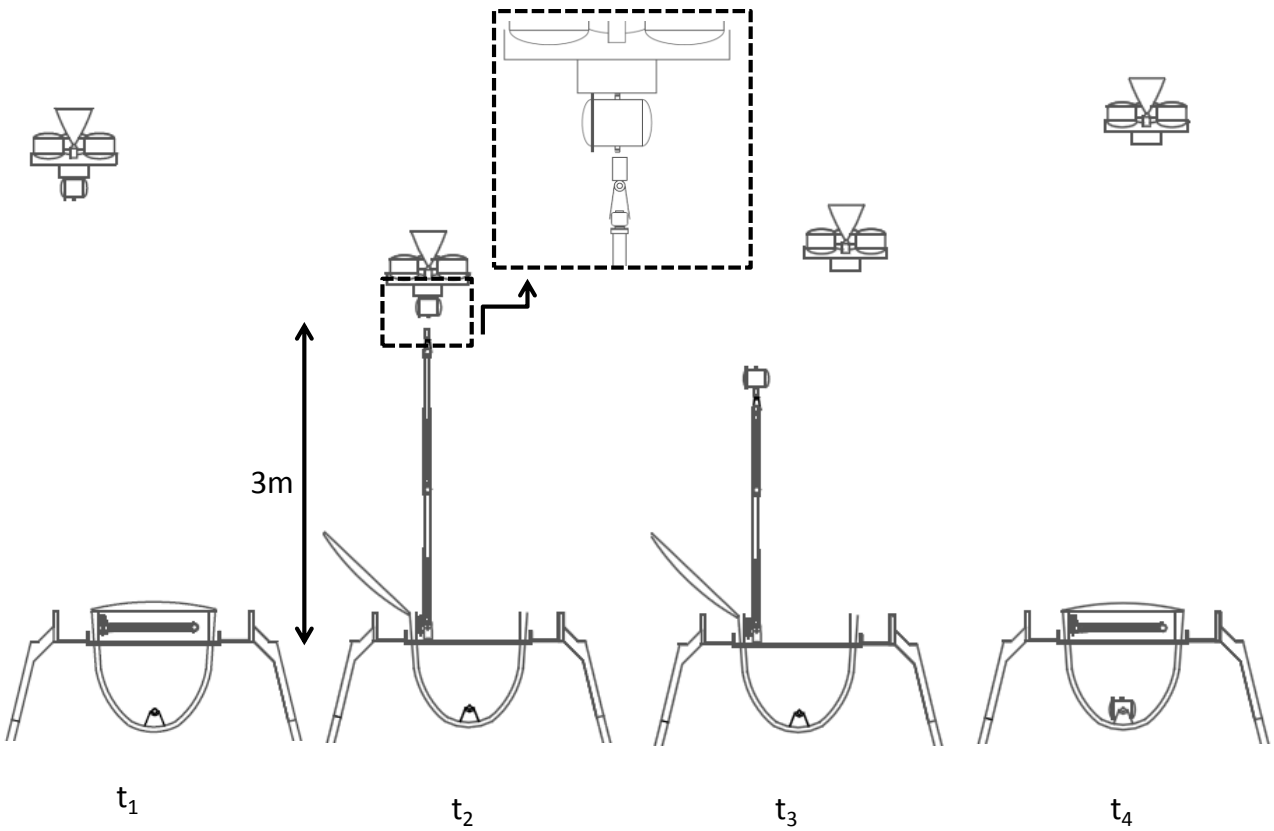

Figure 8: Benchmark concept of operations for sample retrieval. The four sketches each show a cross-section of the ERV and the upper part of the sample retrieval capsule of Figure 6 at a different instant in time during proximity operations.

A notional concept of operations is depicted in Figure 8 where we show four snapshots reflecting different stages of the proximity operations between the ERV and the sample retrieval capsule. Each snapshot shows the ERV and a zoom on the upper part of the capsule which acts as the chaser vehicle during all of the rendezvous operations. Time t_1 marks the beginning of the proximity operations. As soon as the two vehicles are sufficiently close to each other, the container lid opens and the robot arm extends for grappling (snapshot at time t_2). The robot arm is deployed to its maximum extension to reduce thruster plume impingement and to minimize disturbing forces and unwanted heat loads

exerted by the capsule on the ERV. Physical grappling is achieved between the snare end effector of the robot arm and a knuckle fixed to the sample canister for that purpose. On the ERV side, a passive release mechanism provides the separation of the sample canister from the mother ship. Snapshots at times t_2 and t_3 show the overall grappling process and the close-up image in between gives a more detailed view. Finally, once the sample transfer is completed, the robot arm deposits the payload into a safety bed at the bottom of the container to minimize shaking and vibration during reentry. The container lid closes at time t_4.

2. Discussion

The feasibility of the sample retrieval concept outlined in the previous section should be discussed along the following lines:

- The accuracy in guidance needed to maintain a stable relative configuration between the ERV and the chaser capsule as well as the precision required to perform the robotic operations depicted in Figure 8 should be achievable without significant concerns. The centimeter-level precision needed to perform physical grappling of the sample canister is comparable to the former performance requirements of the Shuttle when docking to the ISS[13]. The Shuttle, equipped with sensors such as radar, star tracker, and Crew Optical Alignment System (COAS), has demonstrated the capability to dock to the ISS in numerous flights. To perform this docking a precision equal or better than than 3 inches (≈7.5 cm) in lateral alignment and 2° in angular alignment are needed with respect to the center of the ISS docking target.

- The attempt to physically capture the sample canister may entail grab-and-bump effects between the robotic arm and the ERV. In particular, one may be confronted with an ERV continuously bouncing off whenever the robotic arm seeks to enter into contact with the knuckle attached to the canister. This may complicate the task of physical capture significantly. To reduce this risk of grappling failure we therefore envisage the end effector of the robotic arm equipped with an electromagnet. A magnetic field between the end effector and the ERV should substantially reduce potential grab-and-bump effects and assist in aligning the target with the principal axis of the arm.

- In order to ensure continuous isolation of the Martian samples from the outside world, there is a need to ensure hermetical sealing of the container at all times through a dedicated end-to-end strategy. This is achieved by choosing the right structure and material for the container as well as the right container pressurization during all phases of operations. We foresee to use a sufficiently stiff and resistant structure to handle acceleration and vibration loads during launch, as well as thermal loads during reentry, without impairment of the overall sealing assembly. It is also planned to keep the container at vacuum pressure at all times, i.e. at launch, during sample

retrieval operations and during final EDL. The structure and shape of the container are designed in a way to handle the difference in pressure of 1 atm arising between the container and Earth's atmosphere as well as between the container and the pressurized module of the capsule. Should container leaks arise despite all safety measures implemented, this strategy will guarantee a flux of particles directed inwards to the container instead of a hazardous outwards stream of Martian dust. We also propose to implement an active leak detection technique in order to complement our safety strategy further.

An interesting question is whether the chaser capsule should have a crew or not. We argue that the sample retrieval operations can most likely be completed in an automated way, i.e. with no crew intervention required. Missions demonstrating fully autonomous robotic rendezvous operations have become increasingly popular in recent years [14][15][16] and have been carried out successfully in LEO [17]. However, the legacy of rendezvous operations in space has shown that more often than not human backup capability is an important resource and may simplify operations substantially. This point is increasingly valid for high-end scientific missions at very large cost, of which MSR is but an example, where the probability of mission failure must be reduced by all means. We refer to the Skylab 2 repairing mission [18], the hand-capture of Intelsat VI by astronauts [19] or the five Space Shuttle servicing missions to the Hubble Space Telescope [20] for precedents of space operations where mission failure could not have been avoided without crew intervention. In contingency cases a crew provides the capability to intervene in real time, i.e. without the communication delay of ~2.5s typical for the Moon-trailing orbit selected in our design. Mission operations may call for the necessity to operate the robotic arm manually from within the capsule. Likewise, in case of robot arm or container lid failure, an EVA may be required to catch the sample canister using ad-hoc means. A crewed mission, while more expansive than a robotic mission, has the considerably higher safety margins inherent to manned missions and thus lowers the likelihood of catastrophic failure of the mission. The scope of the astronaut training required for MSR contingency cases as well as the additional measures of PP needed in those cases are not discussed in this contribution. We plan to address this problem in a future paper.

- For matters of PP it is best not to leave a possibly contaminated ERV in Earth orbit. The concept thus calls for some sort of ERV disposal once the sample canister has been retrieved. One possibility is to burn the remaining propellant aboard the ERV to depart from the Moon trailing orbit and to target a lunar impact at a location to be determined. Further analysis needs to be done about the topic.

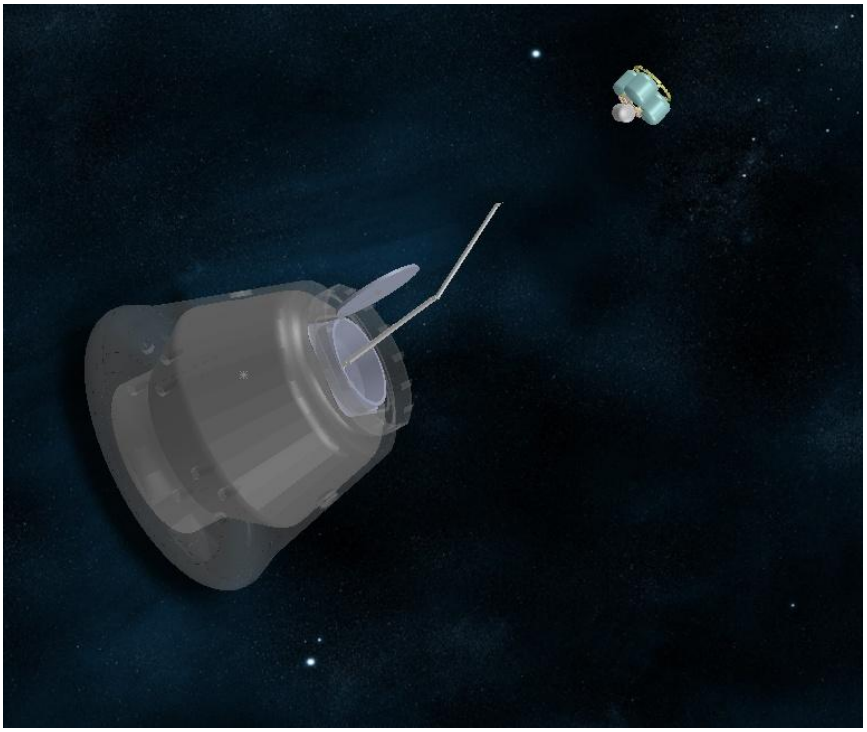

Figure 9: 3D model of the sample retrieval in Earth orbit. The robotic arm extends to grapple the sample canister (marked in white on the ERV) using a magnetic end effector.

IV. Conclusion

In this contribution we reported on ongoing work on the earthbound segment of the Mars Sample Return (MSR) concept outlined in [2]. By taking into account the constraints set out by Planetary Protection regulations, we presented an ERV trajectory minimizing the Delta-V budget required as well as a benchmark concept of operations for physical capture of the samples. We showed that a return trajectory bringing the ERV to a Moon trailing orbit is the preferred option for the trajectory. We also argued that a robotic capture of the sample canister using a fully autonomous approach is feasible but that the success rate of the sample retrieval mission can be augmented if the chaser capsule is crewed. We provided evidence for the overall feasibility of the MSR concept given in [2].

Acknowledgments

We thank former astronaut and Shuttle flight commander Karol ‘Bo’ Bobko for instructive discussions on the precision achievable during grappling activities with the robotic arm of the Shuttle.

References

[1] National Academy Press, 2010, "Visions and Voyages for Plametary Science in the Decade 2013-2022"

[2] Lemke, L.G., Bowles, J., Gonzales, A., Huynh, L., Stoker, C., 2013, "Mars Sample Return Using Commercial Capabilities", Interplanetary Probe Workshop, San Jose State University, San Jose, 17-21 June 2013

[3] Braun, R.D.; Manning, R.M., 2007, *"Mars Entry, Descent and Landing Challenges",* Journal of Spacecraft and Rockets, Vol. 44, No. 2, pp. 310-323

[4] Oberto, R., 2002, "Mars Sample Return: a Concept Point Design by Team-X", IEEE Paper 0-7803-7231-1/02/$10.00/Q 2002

[5] United Nations Office for Outer Space Affairs (UNOOSA), 1967, "Outer Space Treaty", Article IV, http://www.unoosa.org/oosa/SpaceLaw/outerspt.html

[6] ICSU COmmittee for SPAce Research (COSPAR), 2002, "Planetary Protection Policy", https://cosparhq.cnes.fr/sites/default/files/pppolicy.pdf

[7] NASA Policy Directive 8020.7, 1999, "Biological Contamination Control for Outbound and Inbound Planetary Spacecraft", http://nodis3.gsfc.nasa.gov/displayDir.cfm?Internal_ID=N_PD_8020_007G_&page_name=main&search_term=8020%2E7.

[8] NASA Procedural Requirements 820.12.D, 2011, "Planetary Protection Provisions for Robotic Extraterrestrial Missions", http://nodis3.gsfc.nasa.gov/displayDir.cfm?Internal_ID=N_PR_8020_012D_&page_name=main&search_term=8020%2E12

[9] See http://www.jpl.nasa.gov/releases/99/csearthflyby.html

[10] Willson, D., 2013, "Mars Sample Return – Sample Handling", Interplanetary Probe Workshop, San Jose State University, San Jose, 17-21 June 2013

[11] International Docking System Standard, "Interface Definition Document", 2011, http://www.internationaldockingstandard.com/download/IDSS_IDD_RevA_Final_051311.pdf

[12] See e.g., http://www.nasa.gov/mission_pages/station/structure/elements/mss.html

[13] NASA Johnson Space Center, 2005, "Rendezvous Crew Training Handbook", DT 35/Rendezvous, ProxOps and Docking".

[14] Kornfeld, R.P., Parrish, J.C., Sell, S., 2007, "Mars Sample Return: Testing the Last Meter of rendezvous and Sample Capture", Journal of Spacecraft and Rockets, Vol. 44, No. 3, 692

[15] Morring, F., 2006, "Target Practice", Aviation Week and Space Technology, Vol. 164, No. 21, 37

[16] Dornheim, M., 2005, "Rendezvous Trials", Aviation Week and Space Technology, Vol. 162, No. 16, 35

[17] Friend, R. B., 2008, "Orbital Express Program Summary and Mission Overview", Invited Paper, Proc. o, 695803-1f SPIE Vol. 6958

[18] http://www-pao.ksc.nasa.gov/history/skylab/skylab.htm

[19] http://www.nasa.gov/mission_pages/shuttle/shuttlemissions/archives/sts-49.html

[20] http://www.nasa.gov/mission_pages/hubble/servicing/