HUYGENS PROBE DESIGN : SOME LESSONS LEARNT

June 27th, 2005

3rd Probe Workho
Anavyssos, Greece

P.Couzin (ALCATEL Space)
AM.Schipper (ALCATEL Space)
Th Blancquaert (ESA)

ALCATEL

Avionics Design Overview - gener

> Context
- Huygens design phase extended from 1991 to 1996
- Galileo Probe mission occurred in 1995

> Overall Huygens avionics architecture strongly inherited from Galileo Probe 's one
- Both design driver have been robustness
- redundancy concepts are identical

> In addition Huygens design
- has taken into account the flexibility parameter by implementing software patching capability
- has further inforce the robustness concept
  - by the systematic implementation of backups for the critical function : wake up and entry
  - by the simplification of the operational modes

All rights reserved © 2004, Alcatel Space

Avionics Design Overview - Huygens/Galile comparisc

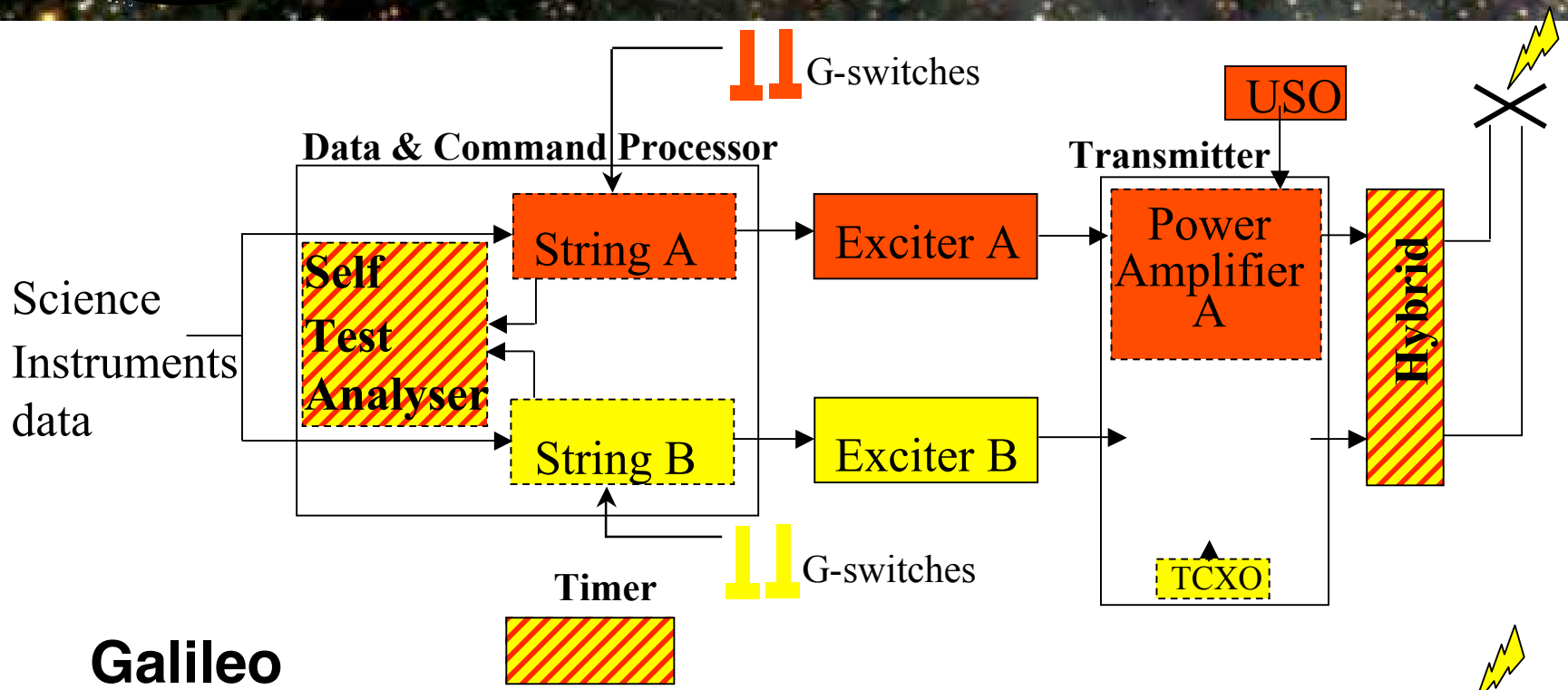

Galileo

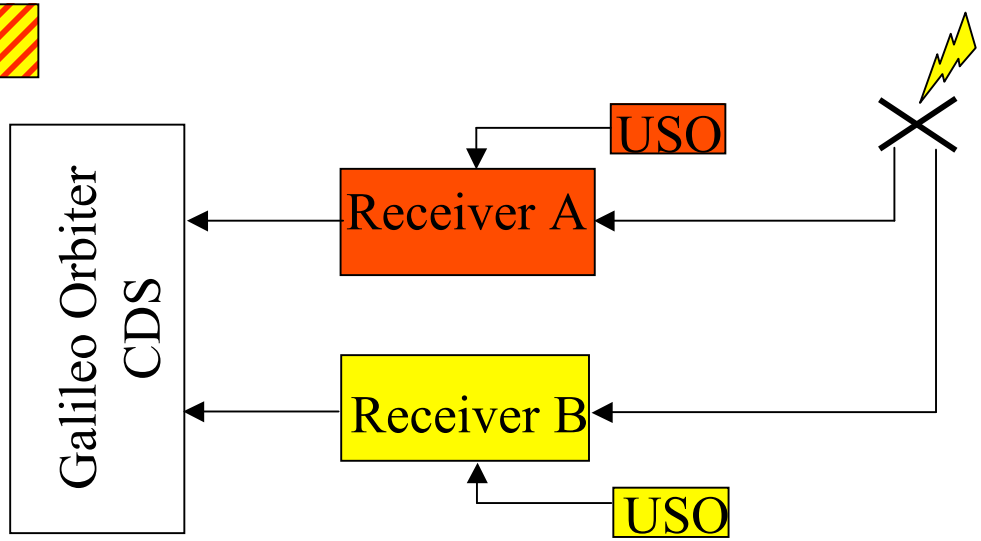

All rights reserved © 2004, Alcatel Space

Avionics Design Overview - Huygens/Galile comparisc

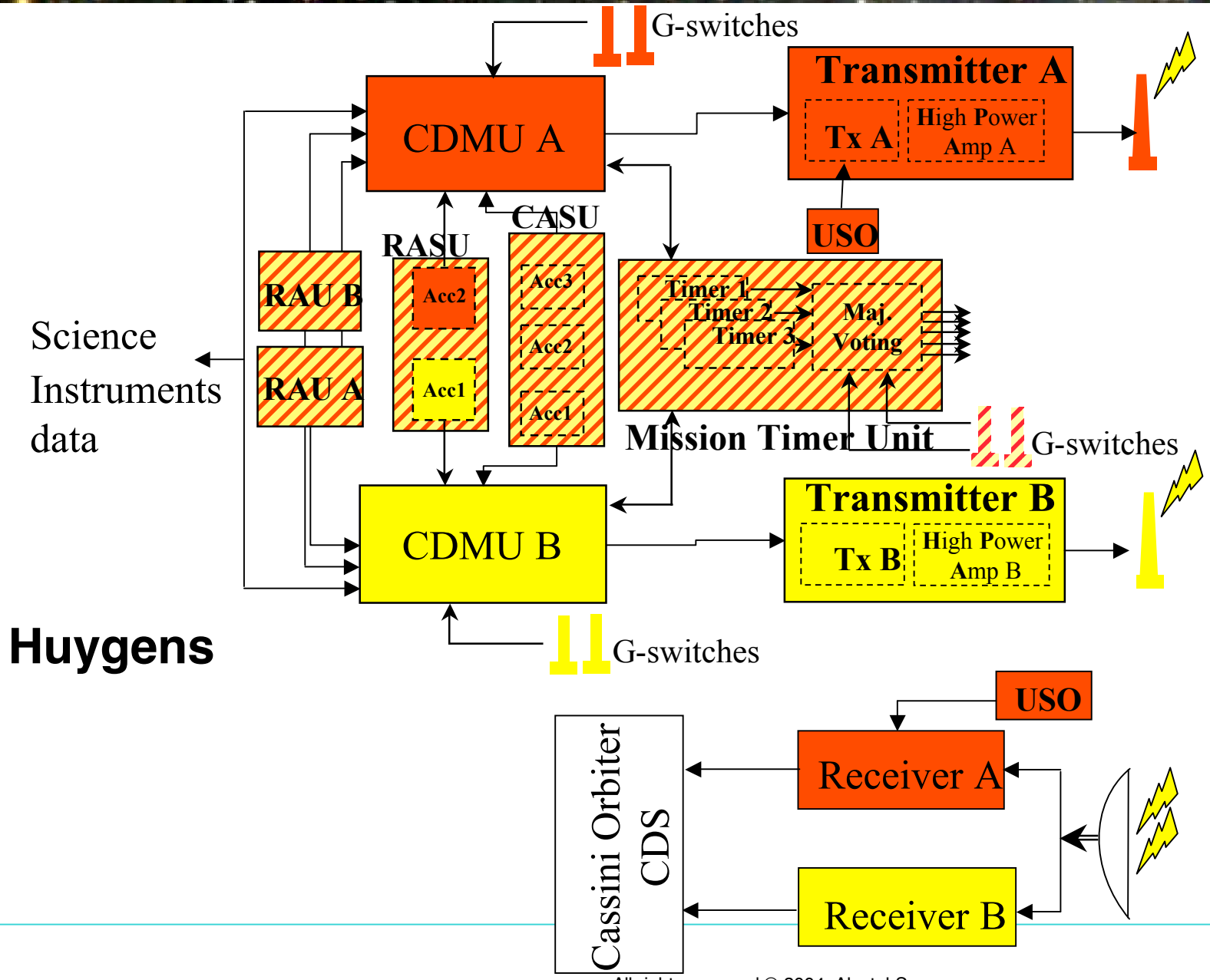

All rights reserved © 2004, Alcatel Space

Step by Step operations for Huygens mission

All rights reserved © 2004, Alcatel Space

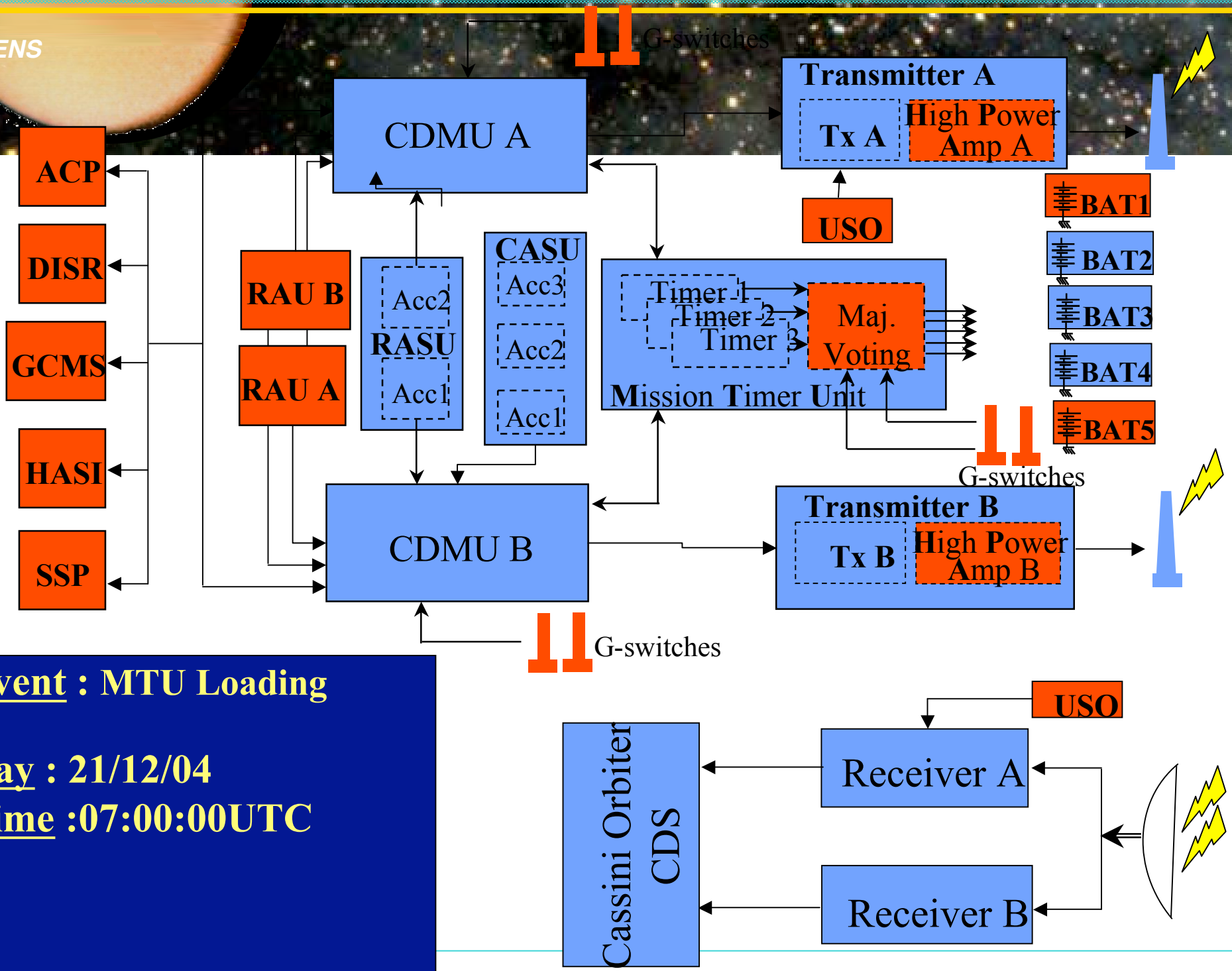

Event : MTU Loading

Day : 21/12/04
Time :07:00:00UTC

All rights reserved © 2004, Alcatel Space

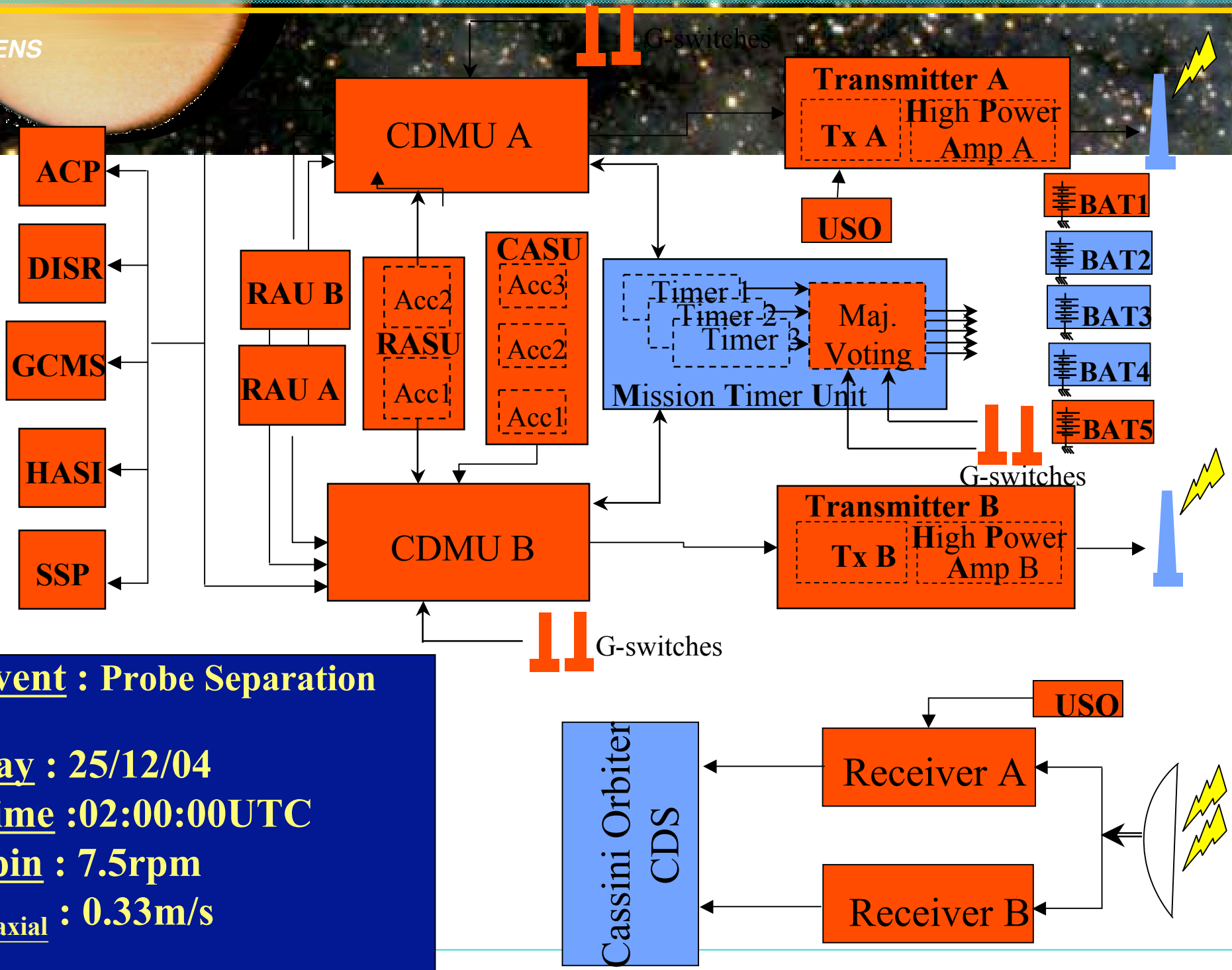

Event : Probe Separation

Day : 25/12/04
Time :02:00:00UTC
Spin : 7.5rpm
V_{axial} : 0.33m/s

All rights reserved © 2004, Alcatel Space

ALCATEL SPACE

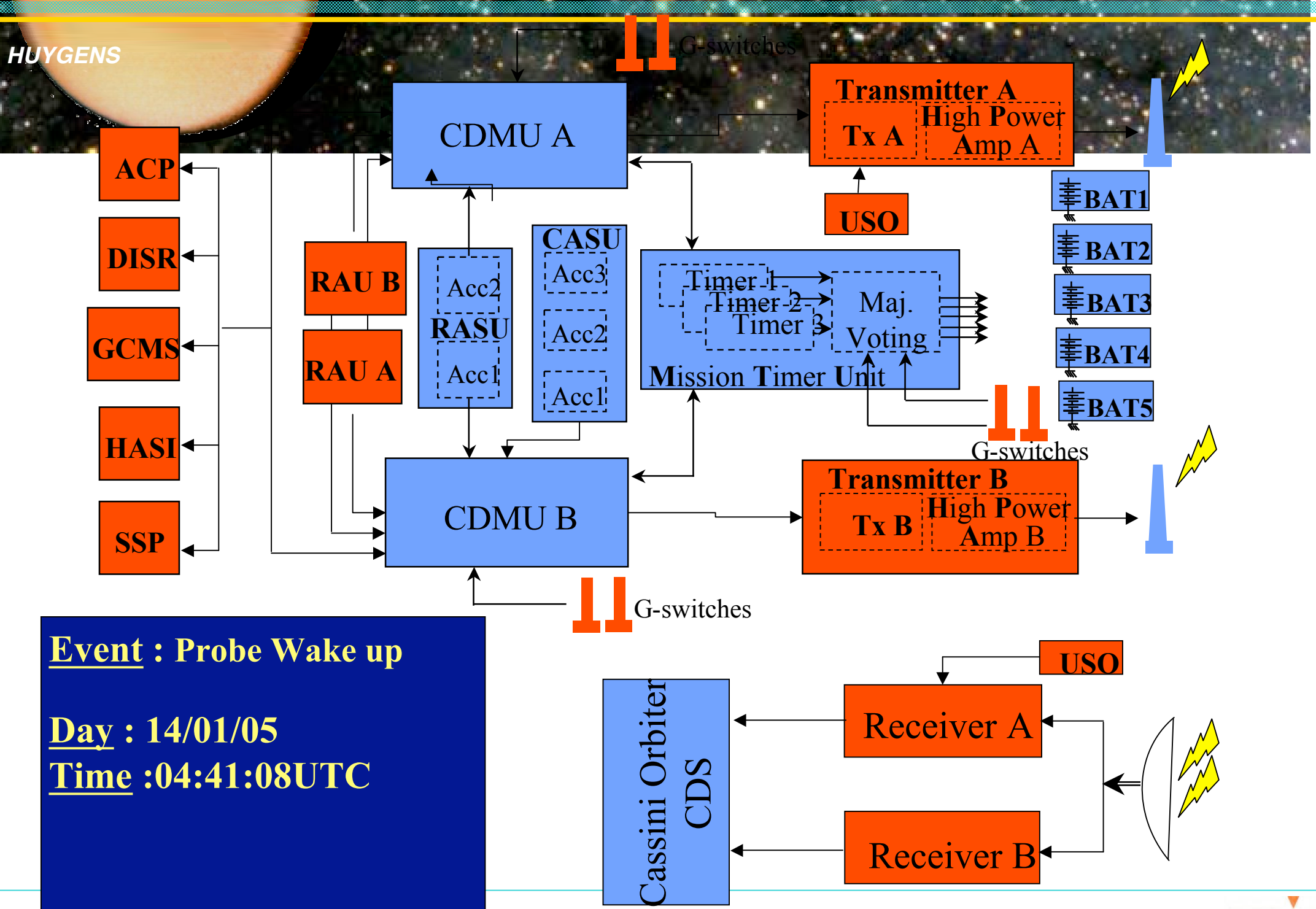

Event : Probe Wake up

Day : 14/01/05
Time :04:41:08UTC

All rights reserved © 2004, Alcatel Space

ALCATEL SPACE

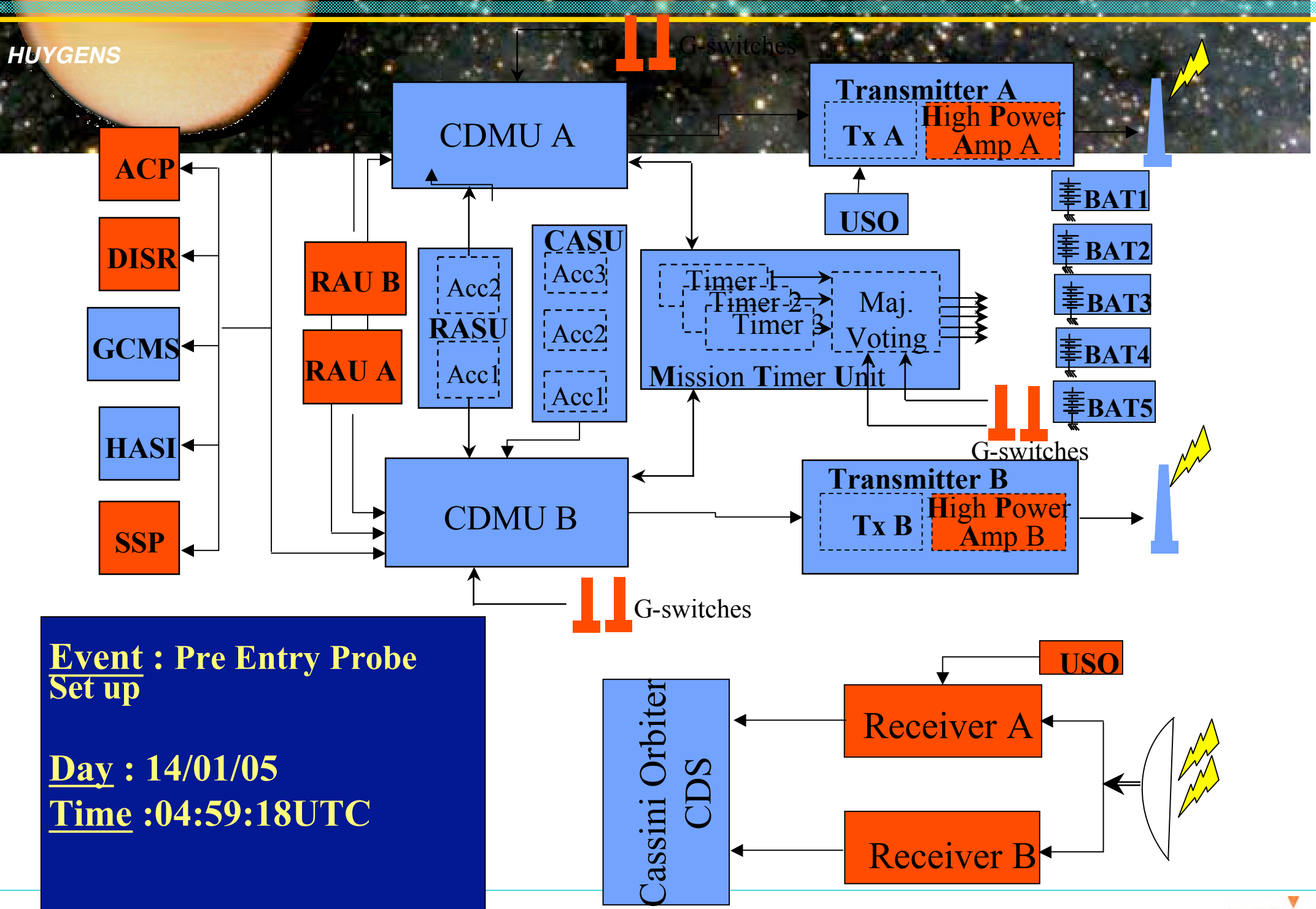

Event : Pre Entry Probe Set up

Day : 14/01/05

Time :04:59:18UTC

All rights reserved © 2004, Alcatel Space

ALCATEL SPACE

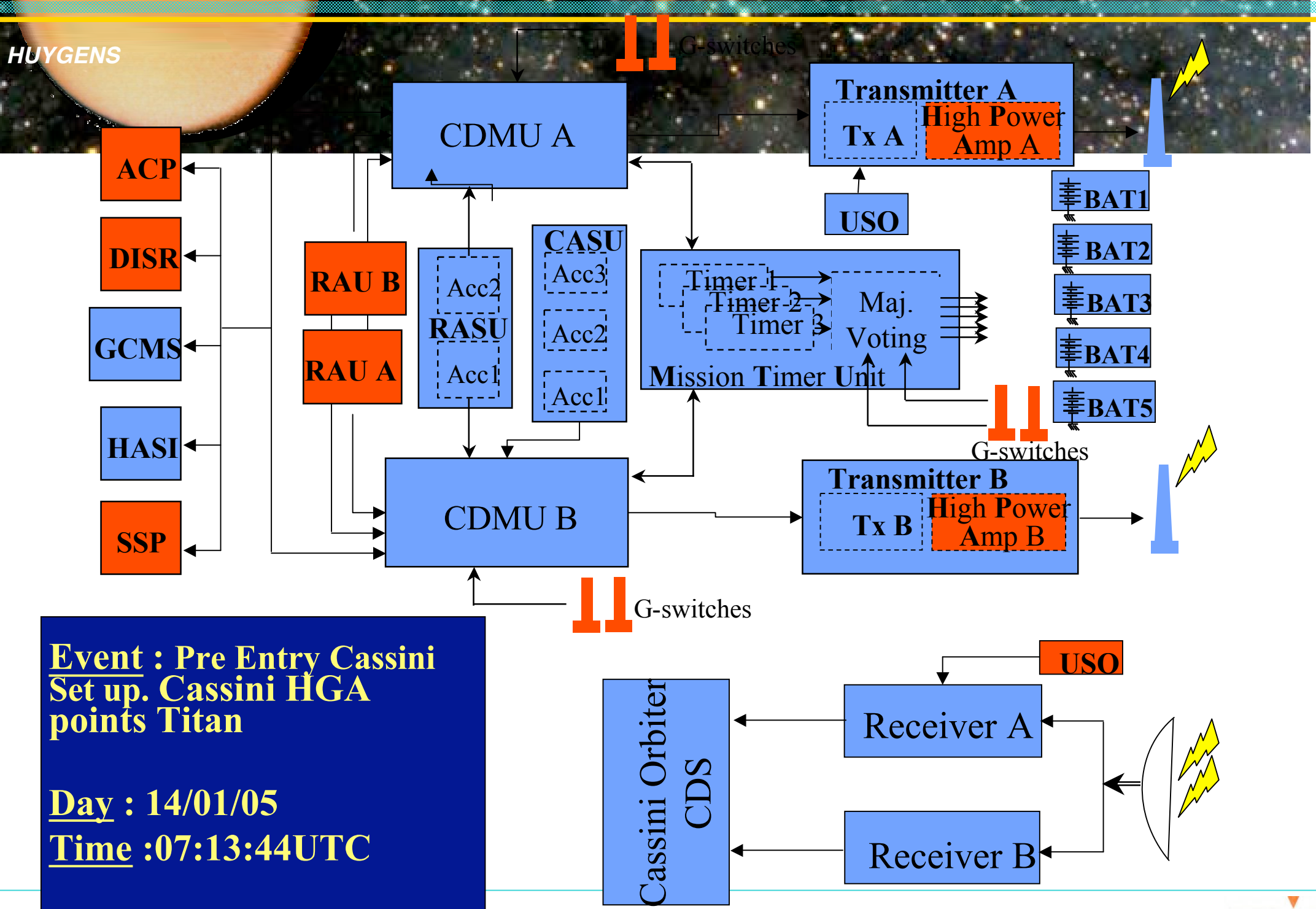

Event : Pre Entry Cassini Set up. Cassini HGA points Titan

Day : 14/01/05

Time :07:13:44UTC

All rights reserved © 2004, Alcatel Space

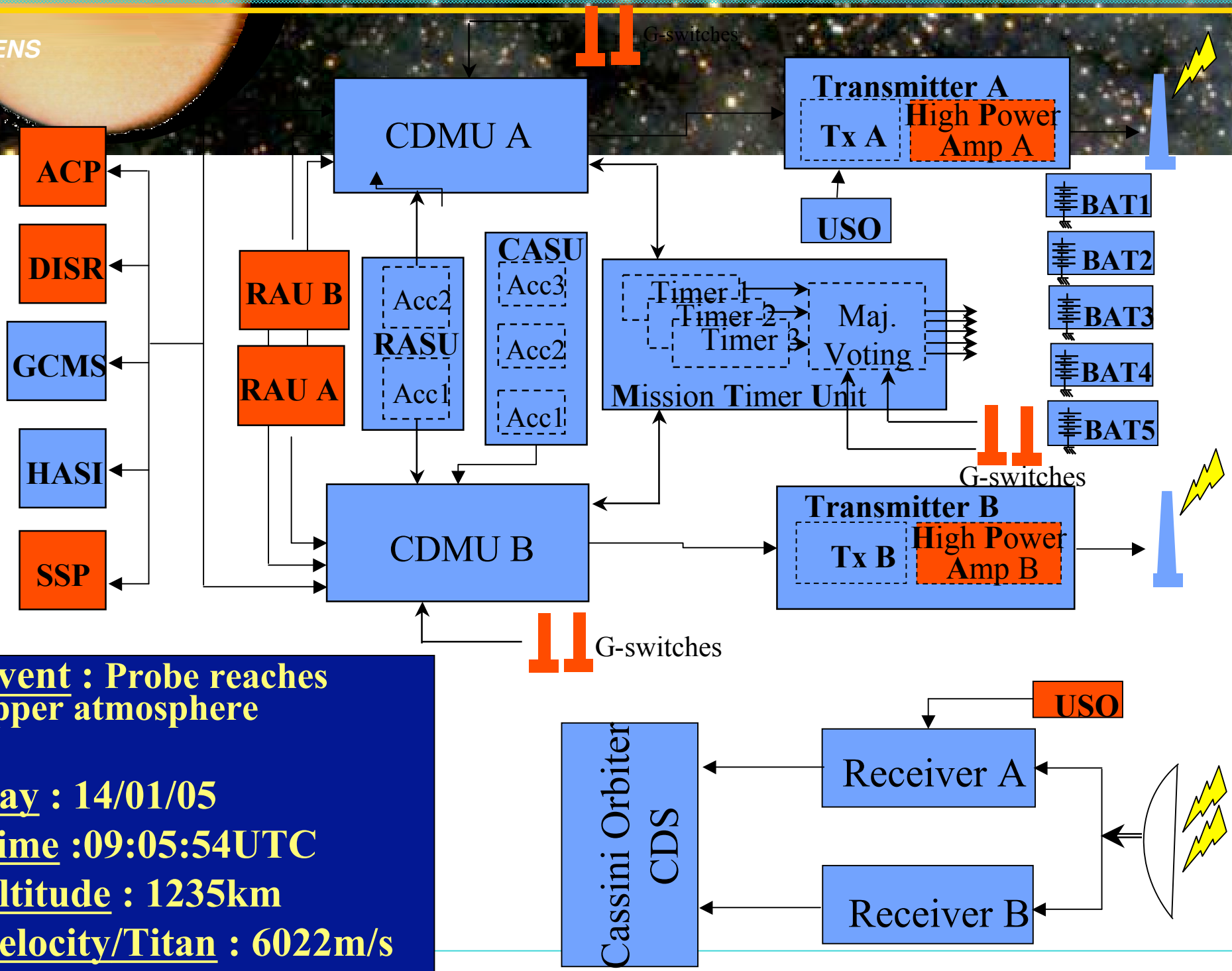

Event : Probe reaches upper atmosphere

Day : 14/01/05

Time :09:05:54UTC

Altitude : 1235km

Velocity/Titan : 6022m/s

Spin : 7.5rpm

All rights reserved © 2004, Alcatel Space

ALCATEL SPACE

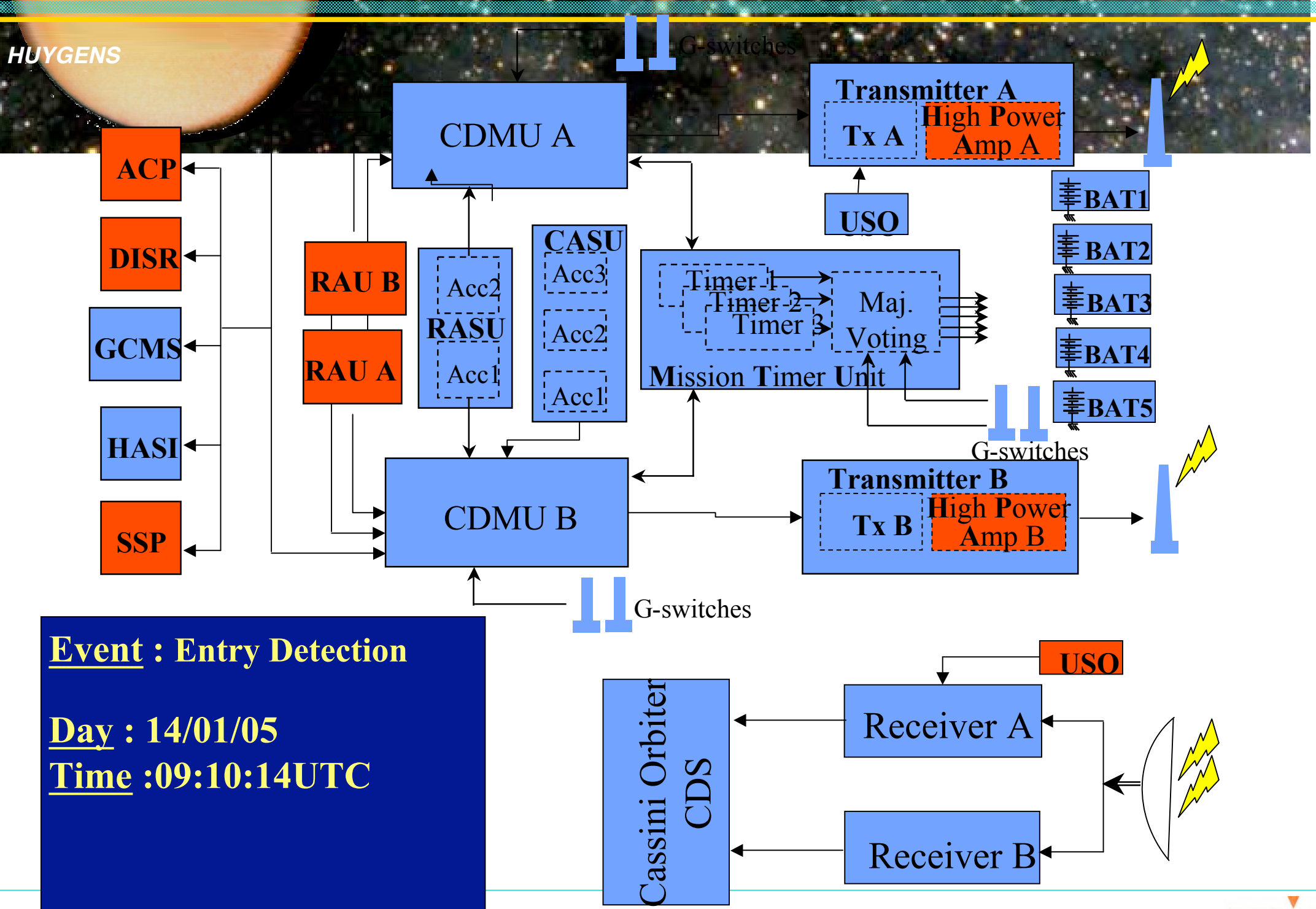

Event : Entry Detection

Day : 14/01/05
Time :09:10:14UTC

All rights reserved © 2004, Alcatel Space

ALCATEL SPACE

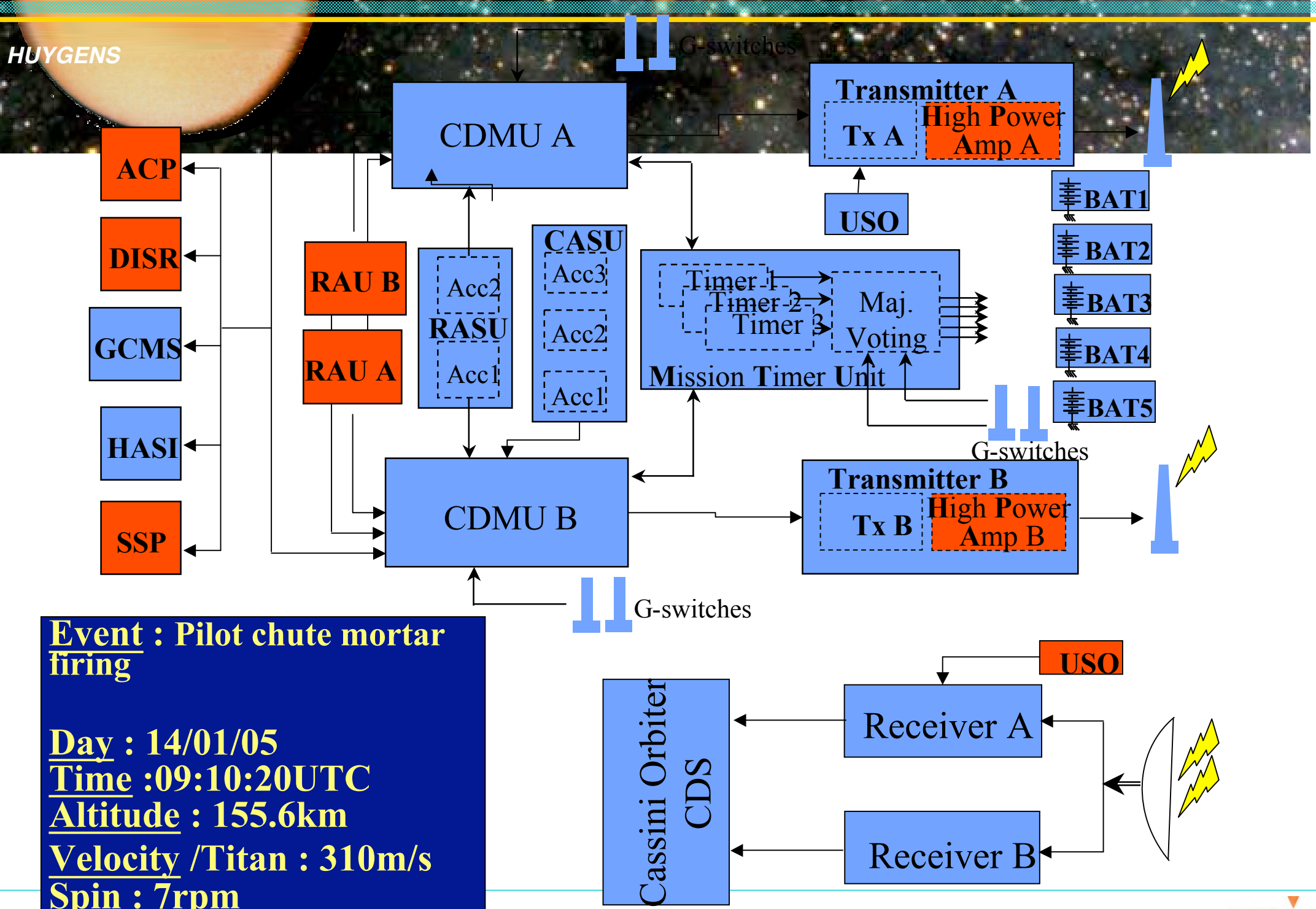

Event : Pilot chute mortar firing

Day : 14/01/05
Time :09:10:20UTC
Altitude : 155.6km
Velocity /Titan : 310m/s
Spin : 7rpm

All rights reserved © 2004, Alcatel Space

ALCATEL SPACE

Entry events

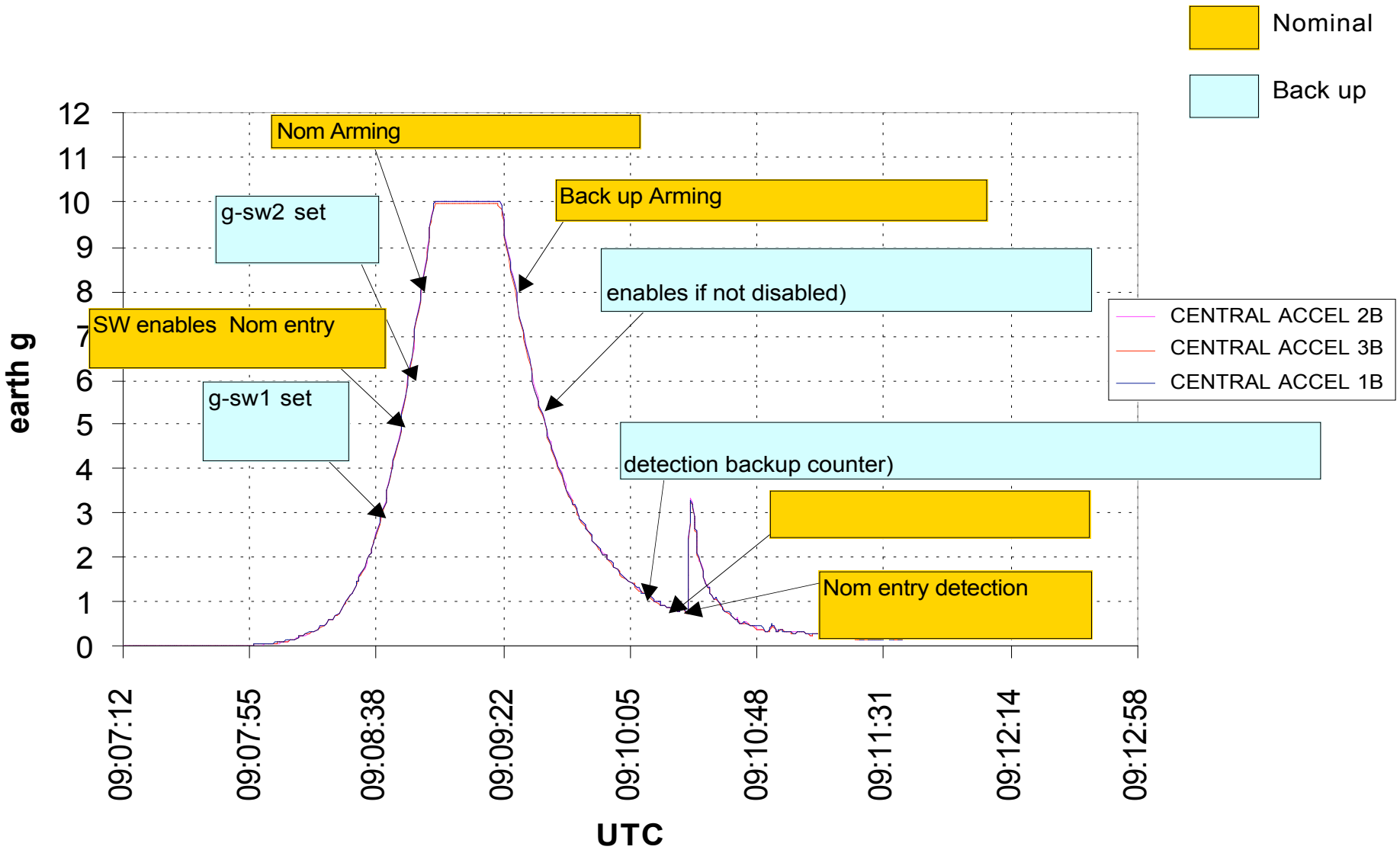

All rights reserved © 2004, Alcatel Space

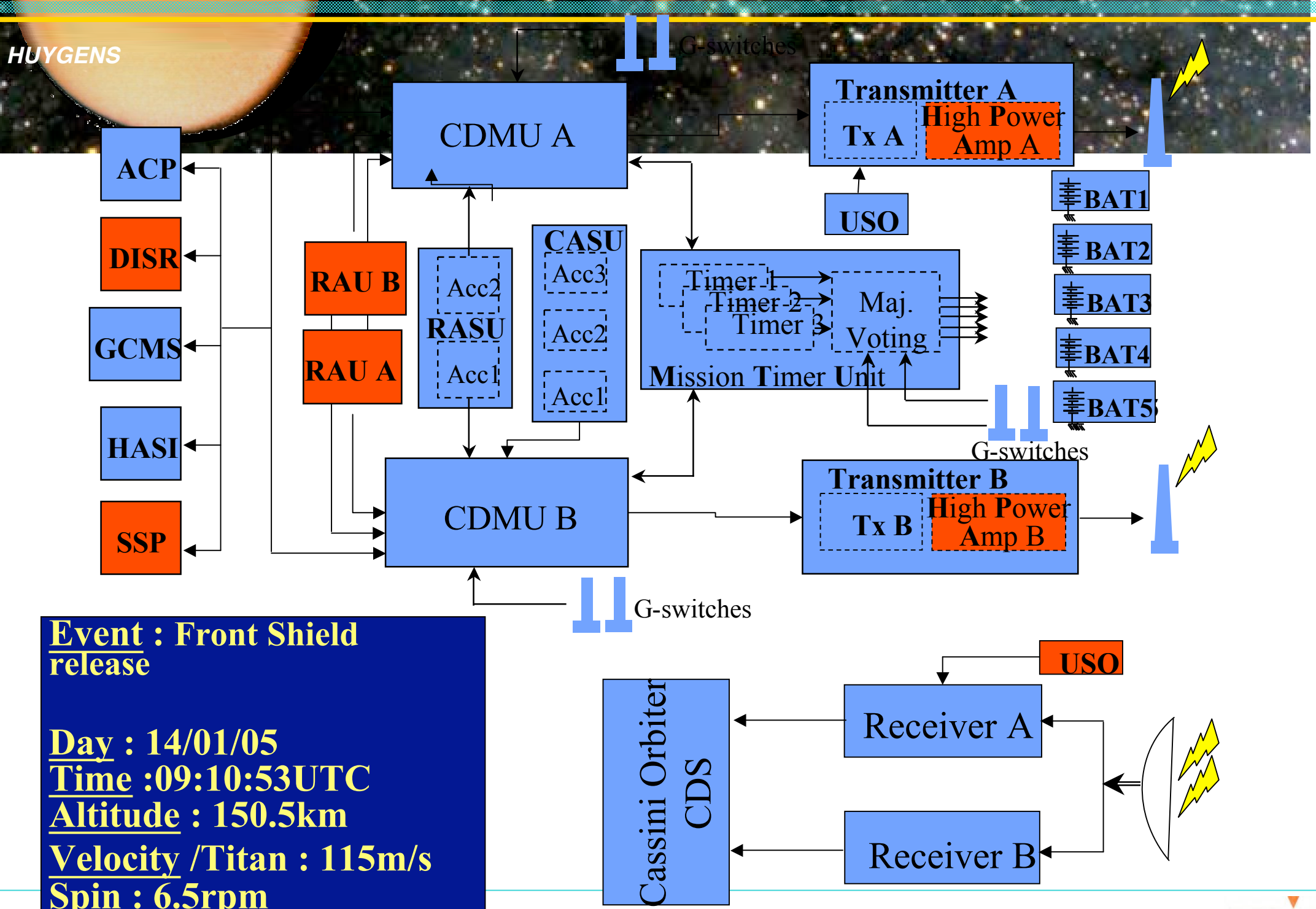

Event : Front Shield release

Day : 14/01/05
Time :09:10:53UTC
Altitude : 150.5km
Velocity /Titan : 115m/s
Spin : 6.5rpm

All rights reserved © 2004, Alcatel Space

ALCATEL SPACE

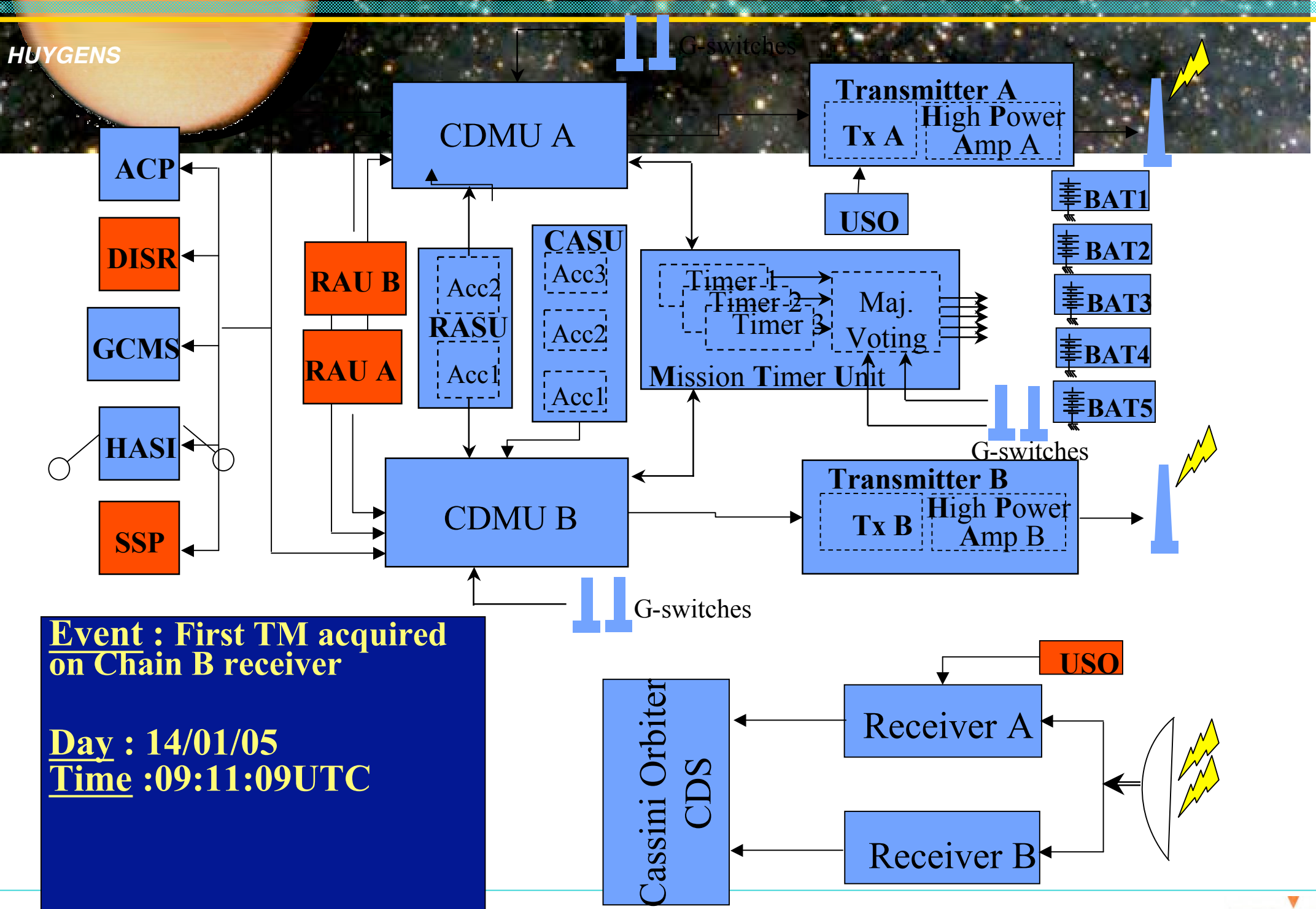

Event : First TM acquired on Chain B receiver

Day : 14/01/05
Time :09:11:09UTC

All rights reserved © 2004, Alcatel Space

ALCATEL SPACE

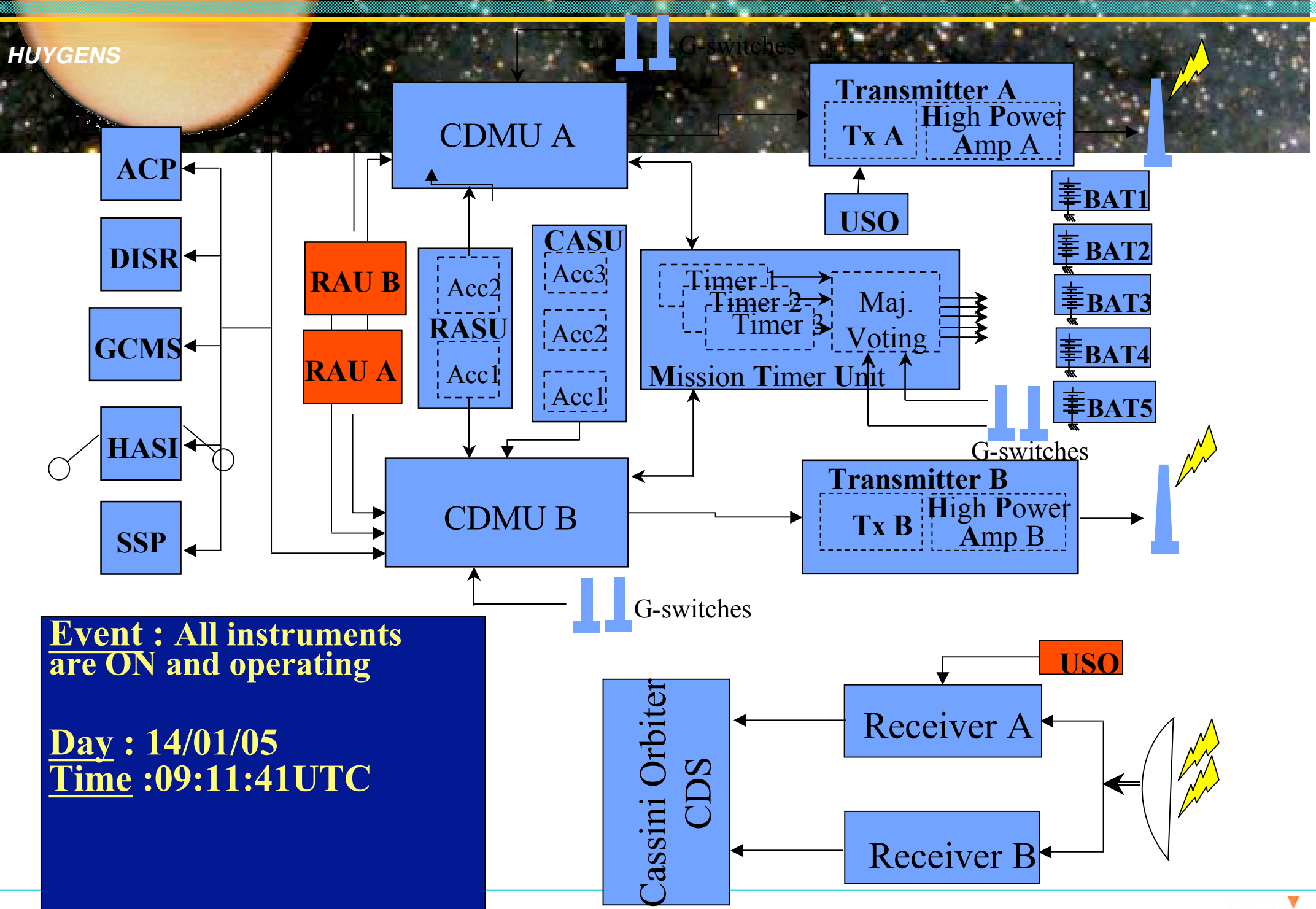

Event : All instruments are ON and operating

Day : 14/01/05
Time :09:11:41UTC

All rights reserved © 2004, Alcatel Space

ALCATEL SPACE

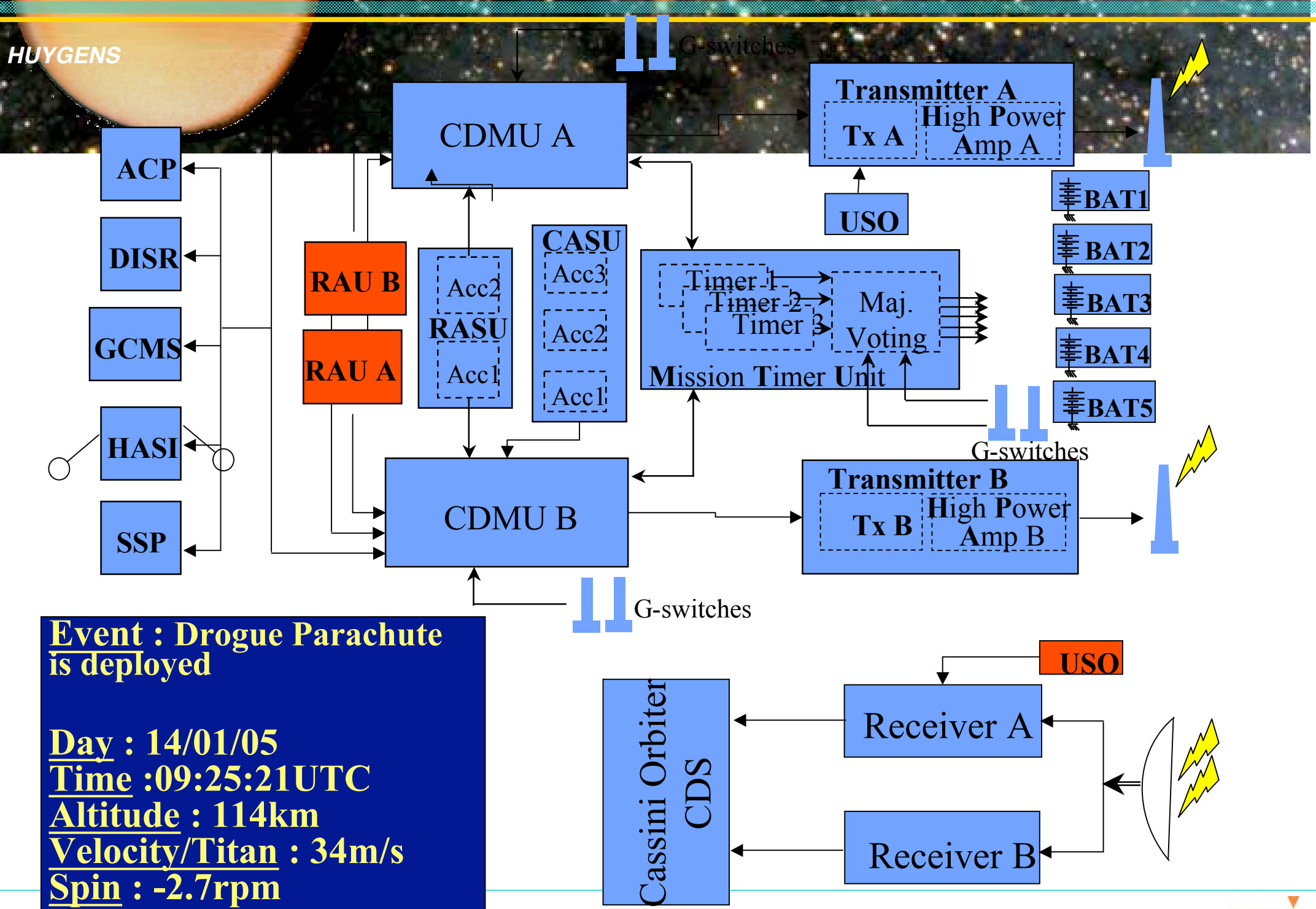

Event : Drogue Parachute is deployed

Day : 14/01/05
Time :09:25:21UTC
Altitude : 114km
Velocity/Titan : 34m/s
Spin : -2.7rpm

All rights reserved © 2004, Alcatel Space

post mission RECONSTRUCTED SPIN

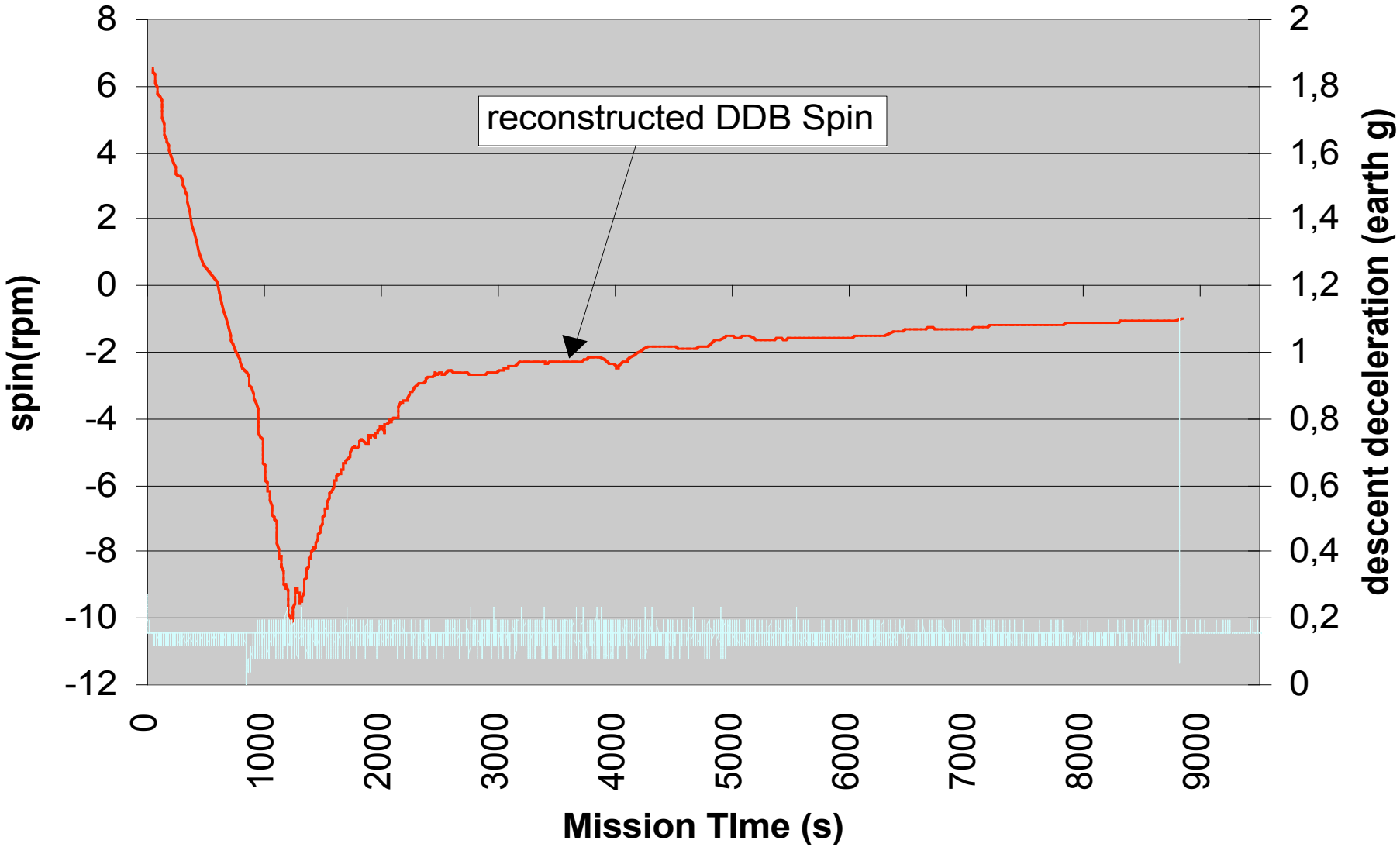

All rights reserved © 2004, Alcatel Space

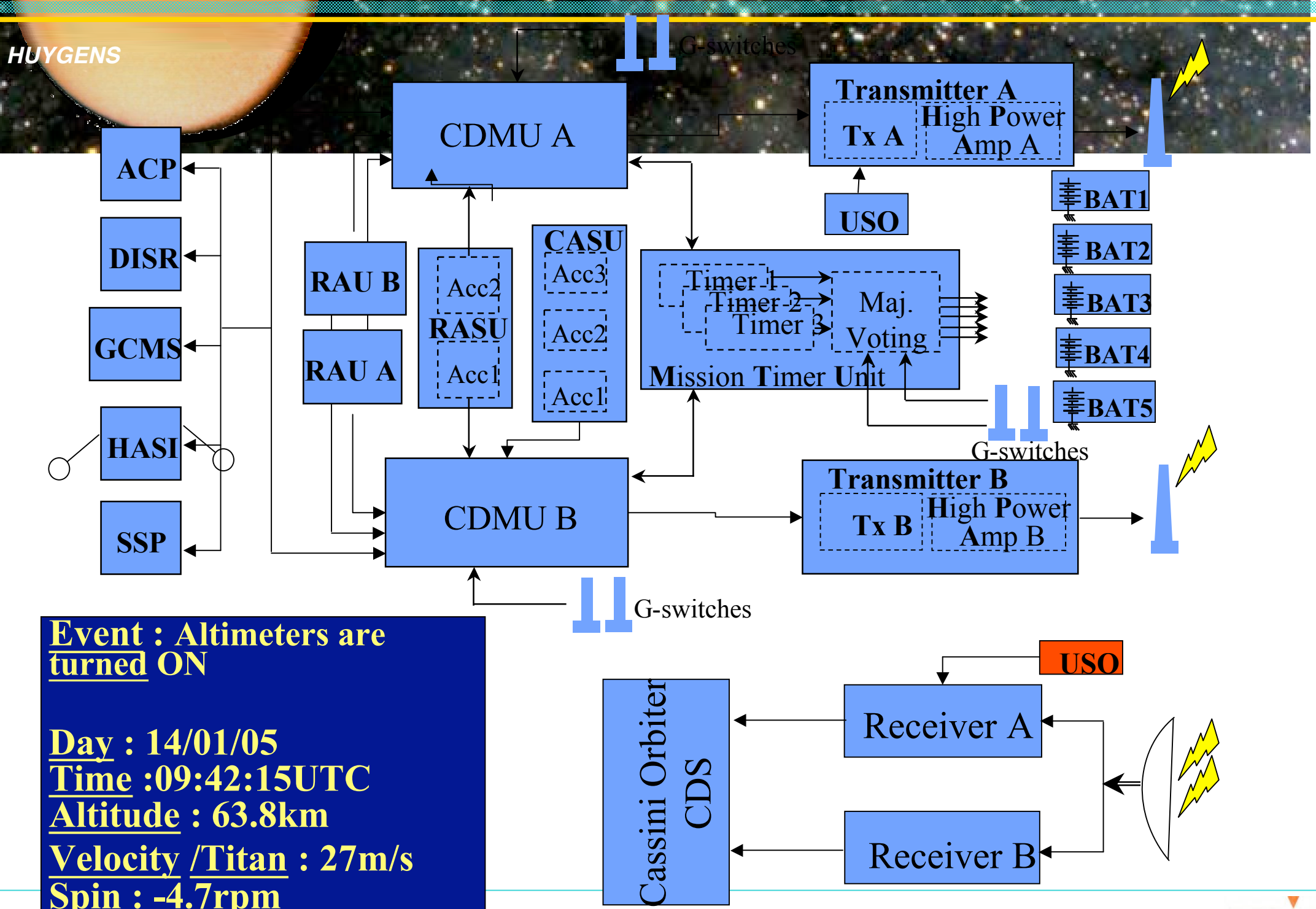

Event : Altimeters are turned ON

Day : 14/01/05
Time :09:42:15UTC
Altitude : 63.8km
Velocity /Titan : 27m/s
Spin : -4.7rpm

All rights reserved © 2004, Alcatel Space

ALCATEL SPACE

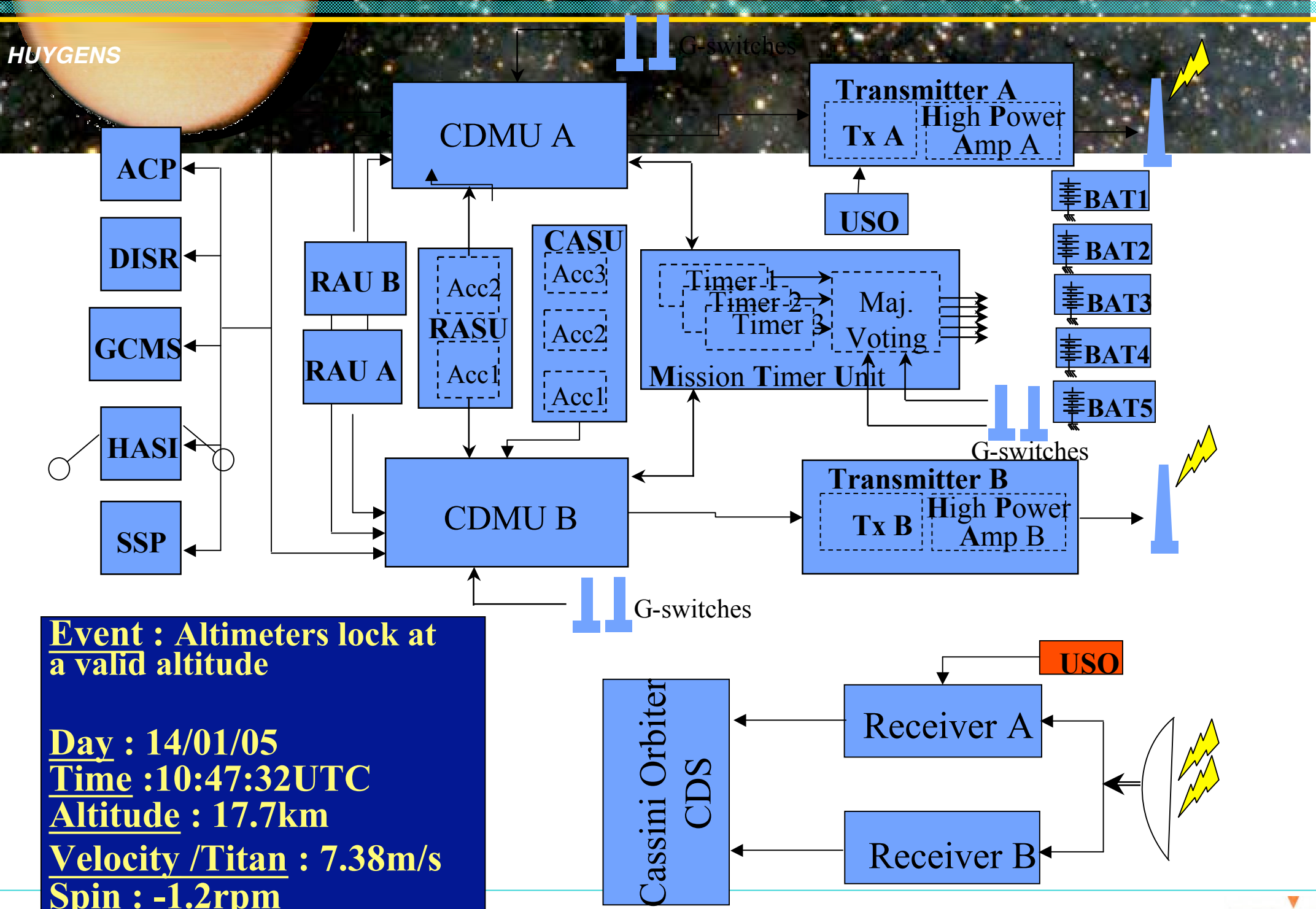

Event : Altimeters lock at a valid altitude

Day : 14/01/05
Time :10:47:32UTC
Altitude : 17.7km
Velocity /Titan : 7.38m/s
Spin : -1.2rpm

All rights reserved © 2004, Alcatel Space

ALTITUDE

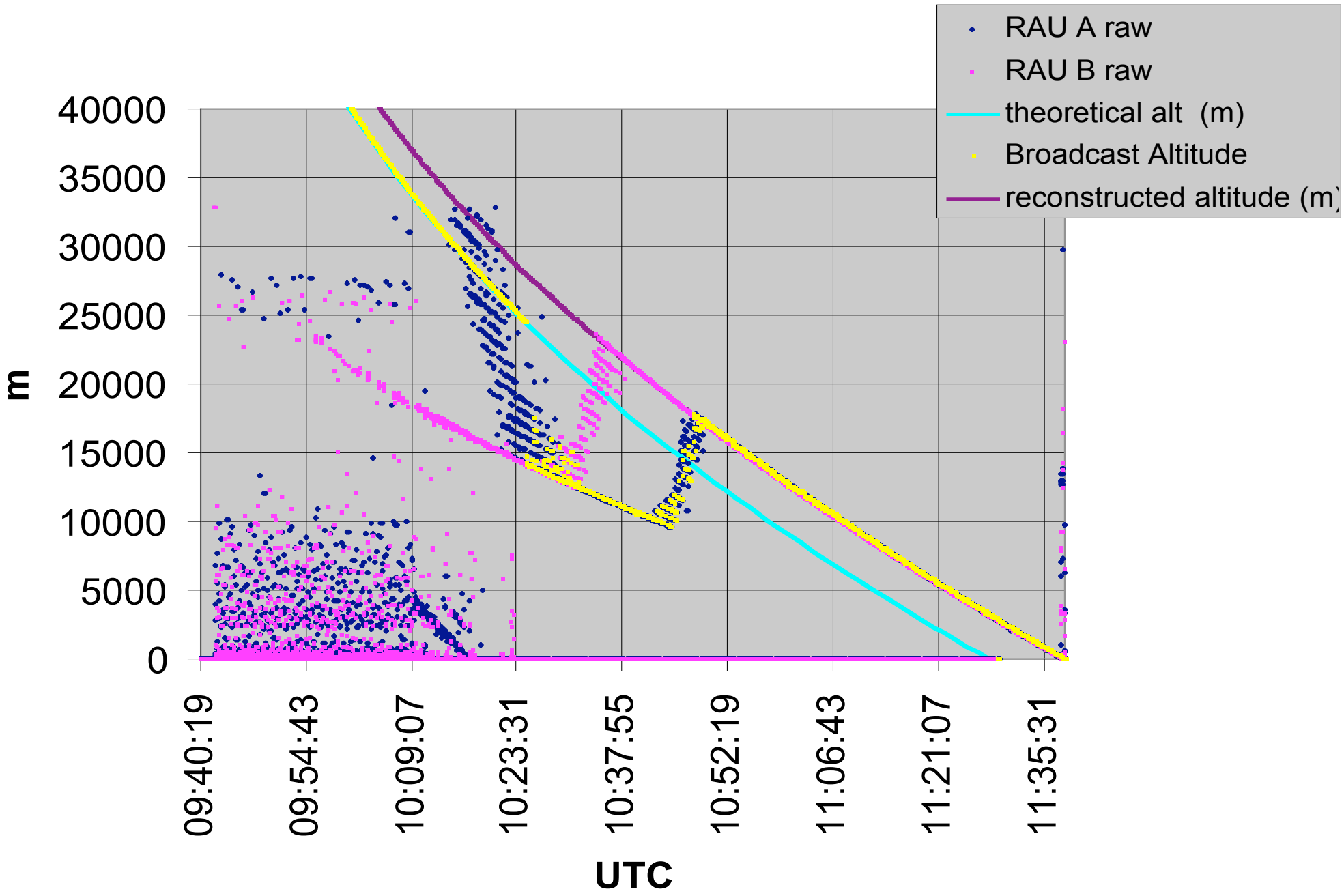

All rights reserved © 2004, Alcatel Space

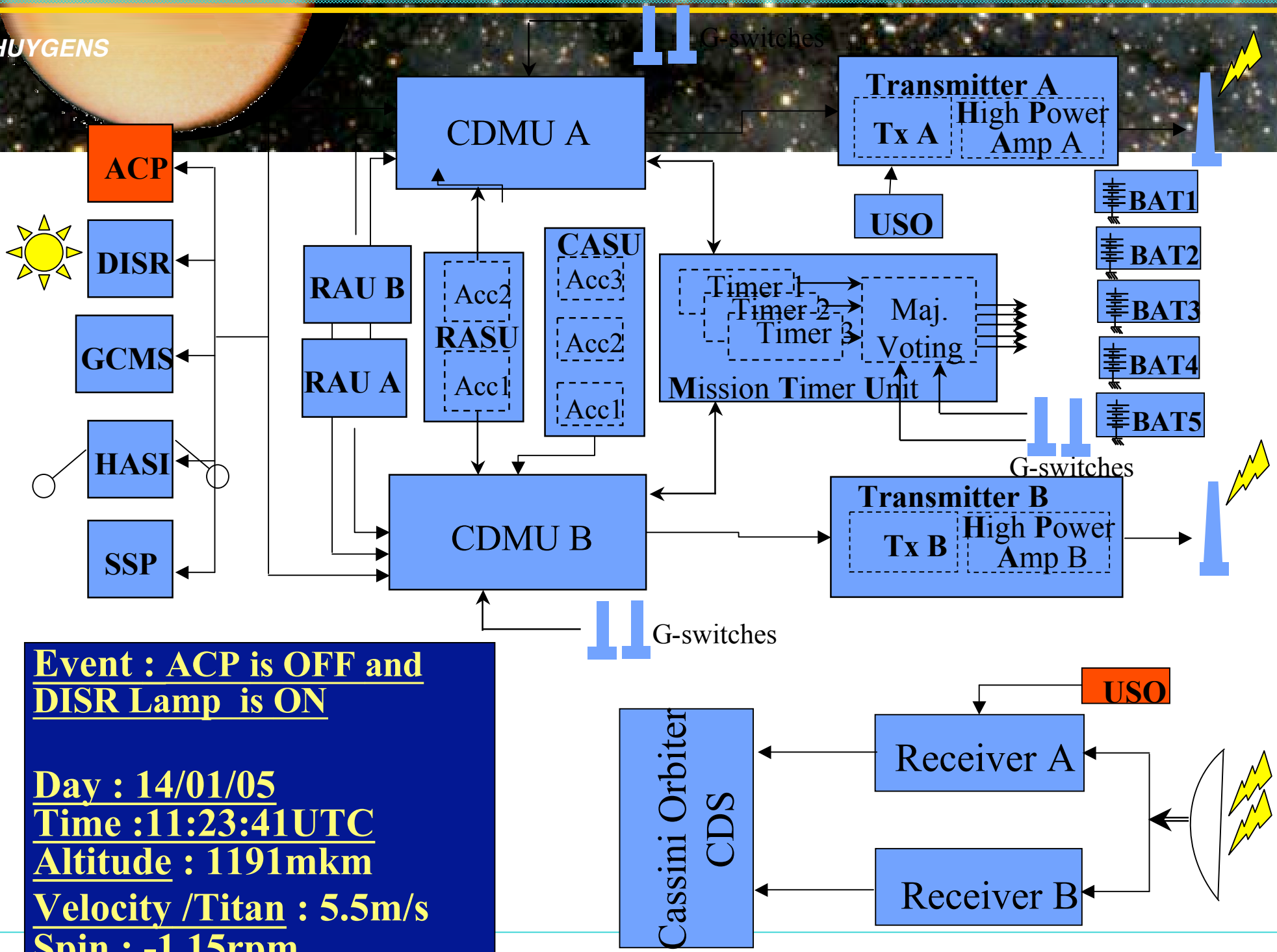

Event : ACP is OFF and DISR Lamp is ON

Day : 14/01/05
Time :11:23:41UTC
Altitude : 1191mkm
Velocity /Titan : 5.5m/s
Spin : -1.15rpm

All rights reserved © 2004, Alcatel Space

ALCATEL SPACE

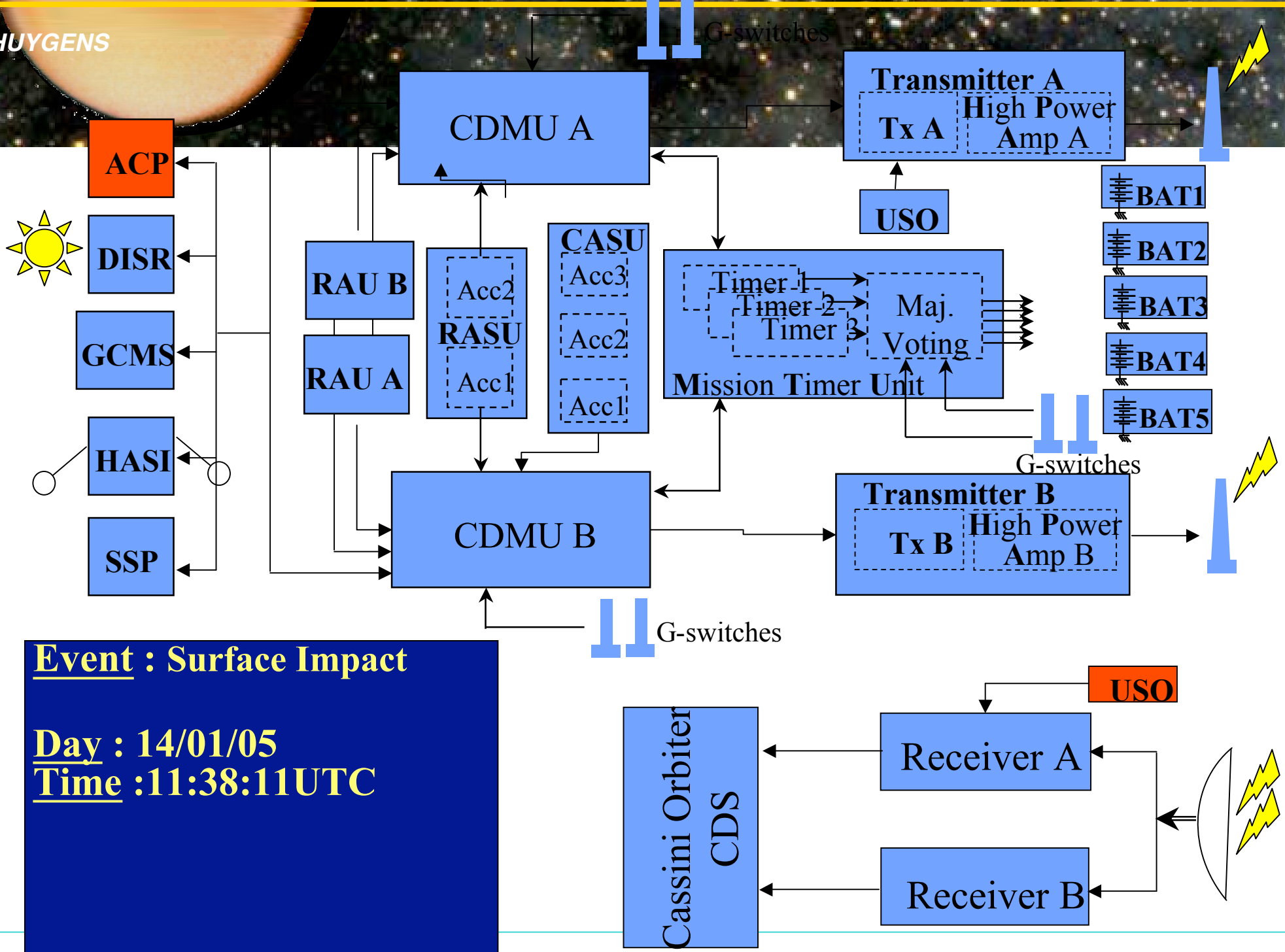

Event : Surface Impact

Day : 14/01/05
Time :11:38:11UTC

All rights reserved © 2004, Alcatel Space

ALCATEL SPACE

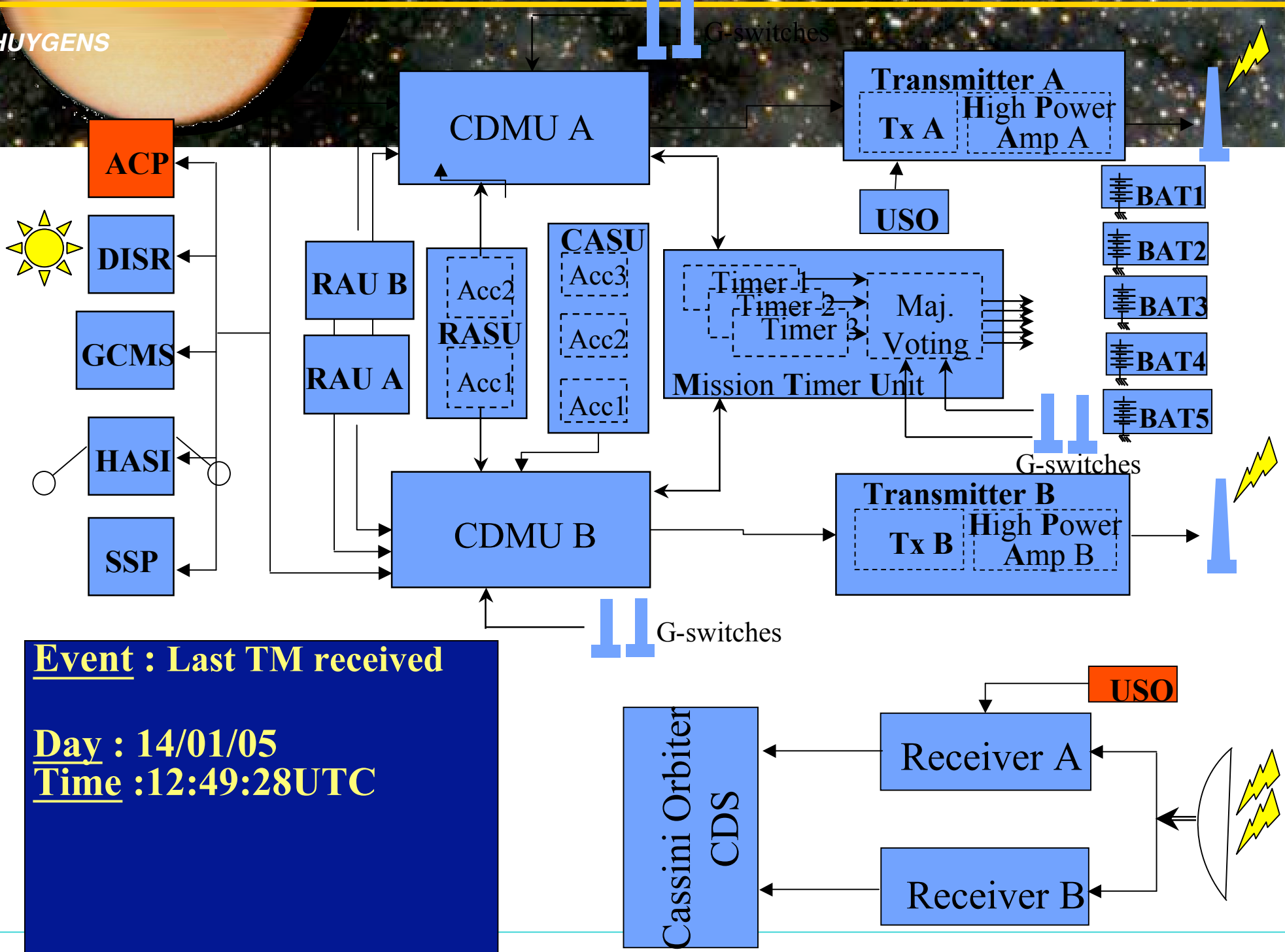

Event : Last TM received

Day : 14/01/05
Time :12:49:28UTC

All rights reserved © 2004, Alcatel Space

ALCATEL SPACE

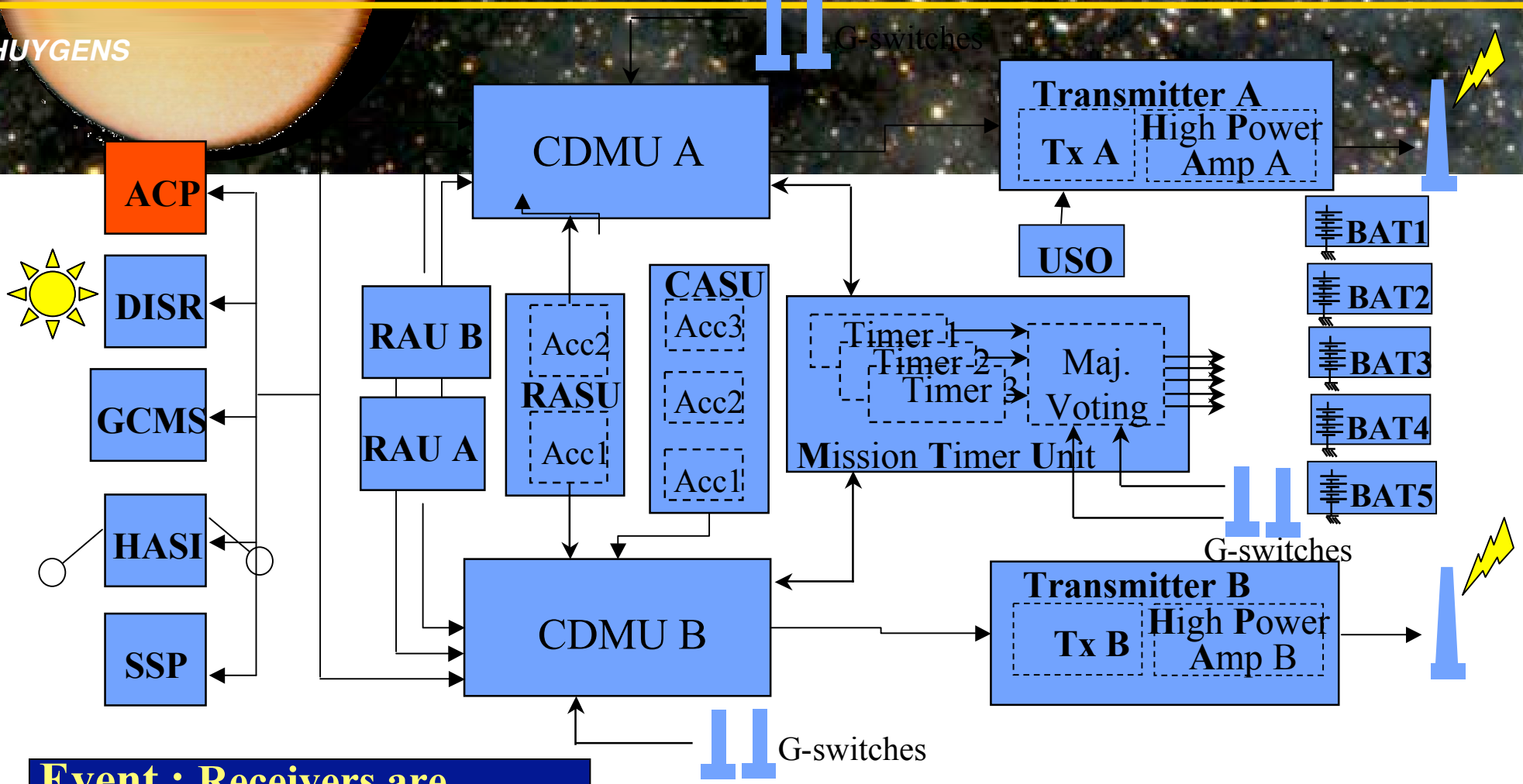

Event : Receivers are turned OFF

Day : 14/01/05
Time :13:37:32UTC

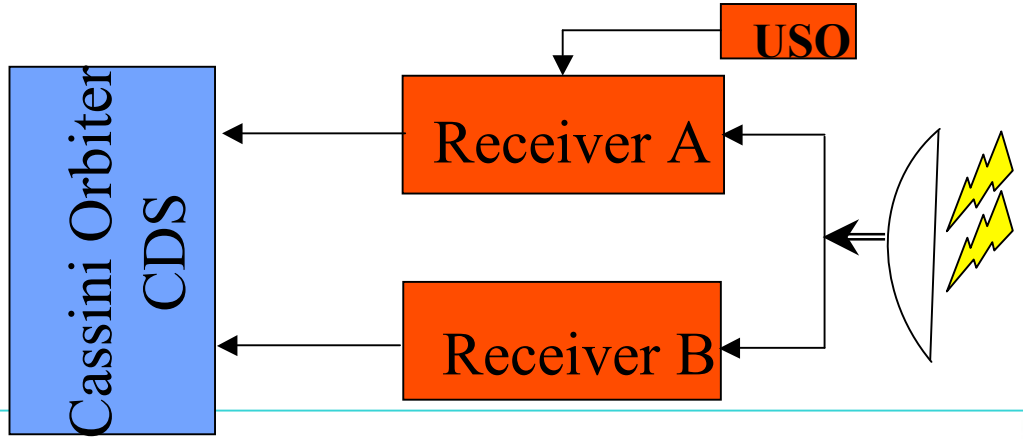

All rights reserved © 2004, Alcatel Space

ALCATEL SPACE

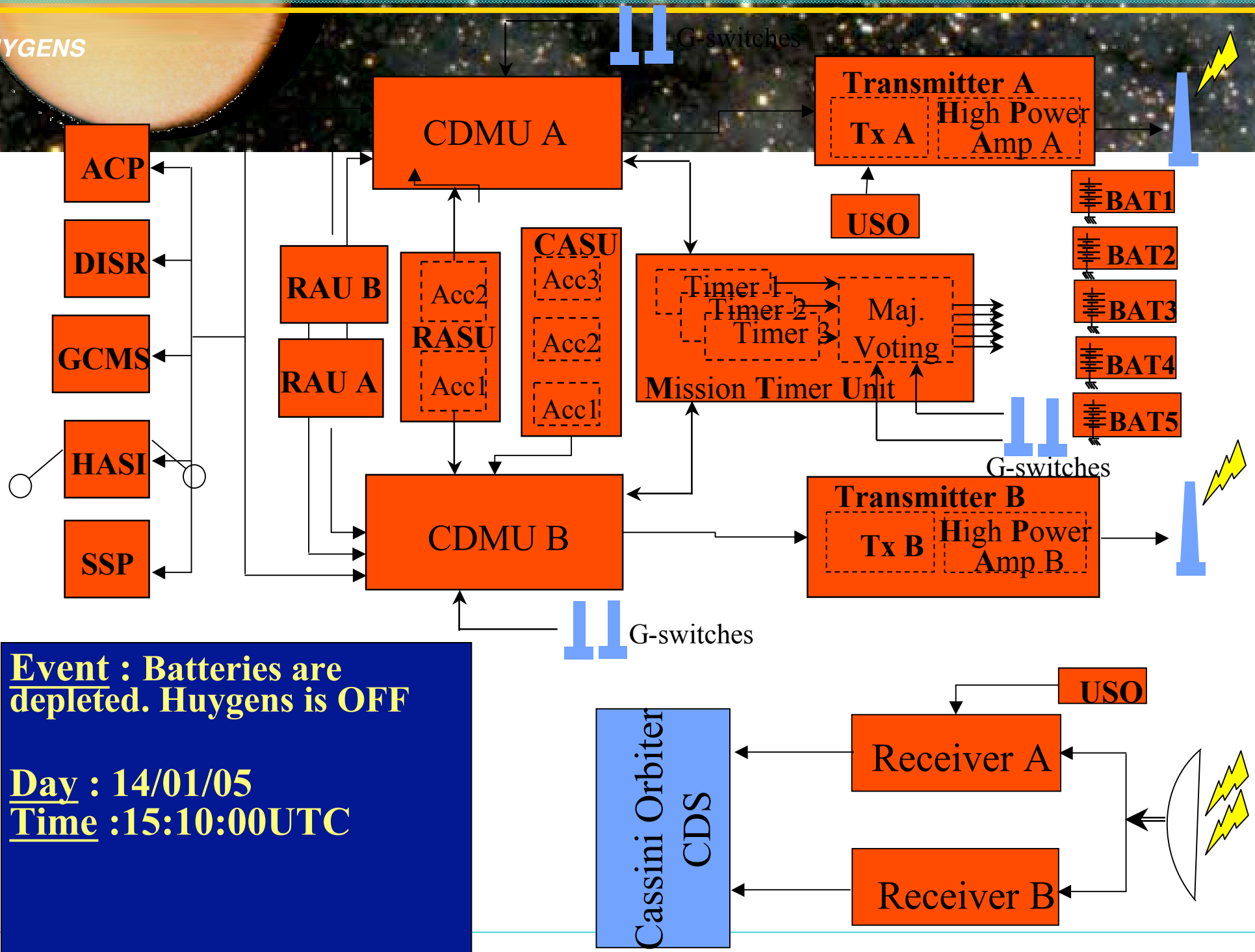

Event : Batteries are depleted. Huygens is OFF

Day : 14/01/05
Time :15:10:00UTC

All rights reserved © 2004, Alcatel Space

ALCATEL SPACE

The Huygens Missio

> Summary:

Coast Phase Duration20 Days + 02:41:18	*Total Mission Data Duration03:39:18Descent Data Dur*

> Probe has worked with Nominal mechanisms

- and would have most probably worked with backups

> Both redundant chains have worked nominally on the Probe

All rights reserved © 2004, Alcatel Space

The Huygens Missio

> Duration of survival on the surface was unexpected ...

> Anomalies during mission have finally had little impact :

- direction of Spin has inverted ~9mn after entry
- Altimeters have locked to a wrong altitude during 20mn
- No data could be received from chain A

All rights reserved © 2004, Alcatel Space

Some Conclusion

> Huygens, after Galileo, has demonstrated the very good adequacy of their common architecture for Entry, descent & landing missions, and especially of the redundancy concept

- real time, totally automous missions require specific architecture : Huygens mission return could have been lost with a different redundancy concept

> Mission flexibility implemented via On board software reprogrammability on Huygens proved to be essential

- Probe software patches have supported the recovery of the link anomaly due to a flaw in the receivers, discovered in 2000

All rights reserved © 2004, Alcatel Space

Some Conclusion

> Search for design robustness on Huygens has also applied to the margin policy, however, as far as energy is concerned :

- positive heritage from Galileo (battery modules are identical) may have not be considered enough
- combination of failure cases which was considered may have been excessively pessimistics
- a minimum of 1 battery could have been saved (leaving additional 5.3kg/90W for payload, with 2h on the surface

> unexpected erroneous altimeters lock at high altitude is mainly due to lack of representative test programme, … or use of the units outside their tested range. « Fly as you test …. » !

> And ….. Entry detection using accelerometers is a robust and testable solution !

All rights reserved © 2004, Alcatel Space