Aerodynamic Characteristics of a Venus Lander as Obtained from Static and Dynamic Wind Tunnel Tests

Juan R. Cruz
NASA Langley Research Center

Anita Sengupta
Jet Propulsion Laboratory

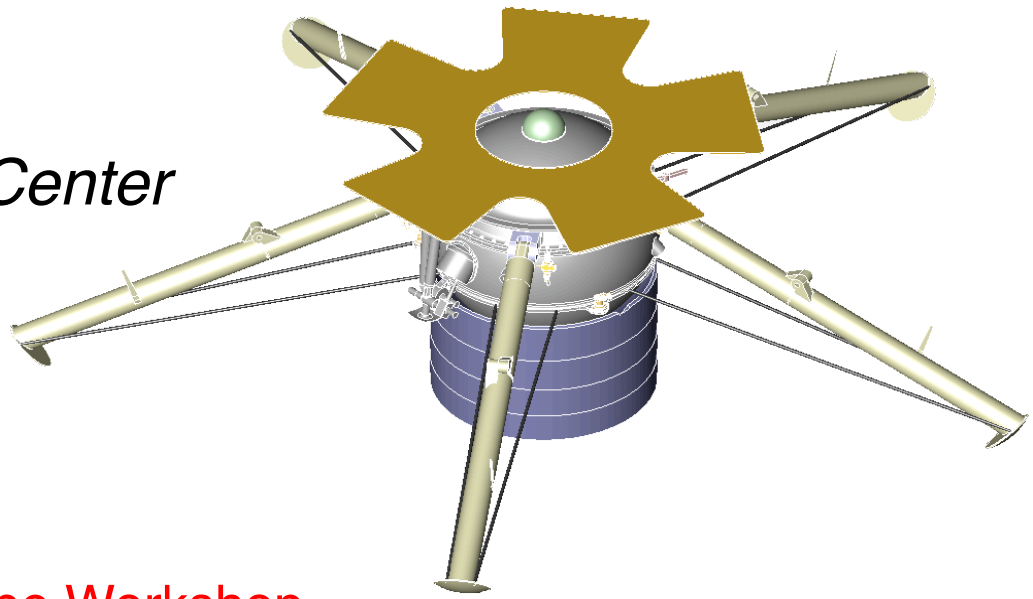

10th International Planetary Probe Workshop
San José, California
June 15-21, 2013

Image credit: NASA / JPL-Caltech

Version 2P

SAGE Venus Lander

SAGE - Surface and Atmosphere Geochemical Explorer

- Proposed Venus lander
  - 0.850 m payload sphere dia.
  - 3.94 m maximum dia. (including legs)
  - 840 kg landed mass
- High atmospheric density at surface (~65 kg/m^3, ~53•Earth) allows use of modest size rigid decelerator to obtain desired landing velocity (~10 m/s)
- Lander design must be statically and dynamically stable
- Static and dynamic wind tunnel test program conducted to find preliminary design that met desired flight behavior

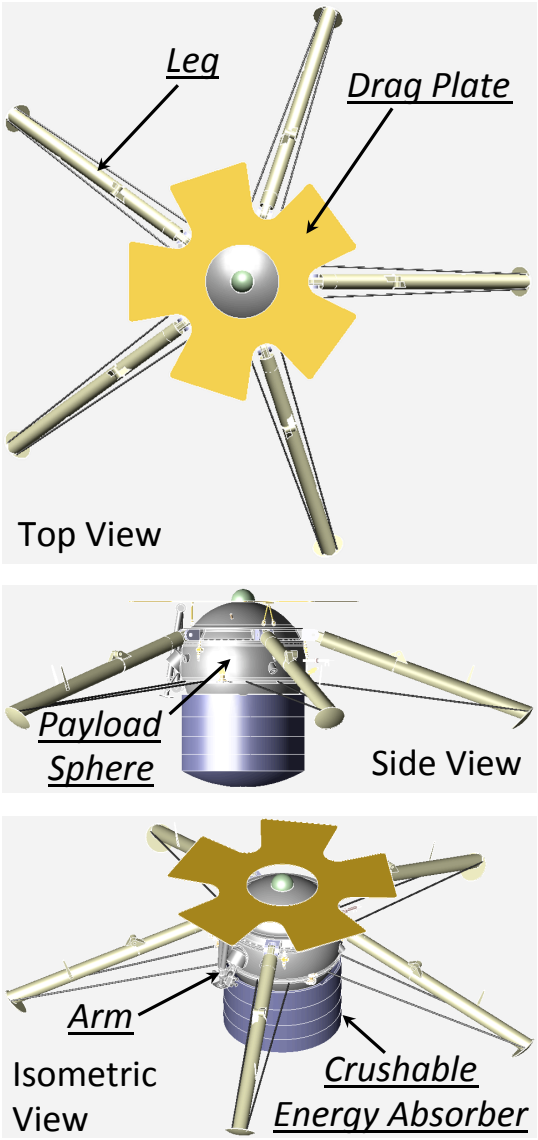

Images credit: NASA / JPL-Caltech

Static Wind Tunnel Tests

- Investigate effects of design configurations (e.g., drag plate size) on the lander static aerodynamics
- Find configurations that meet the static aerodynamic requirements
  - Drag area sufficient to meet terminal descent speed
  - Statically stable
- Provide data to down-select configurations for the dynamic wind tunnel tests
- Testing conducted at the NASA ARC Fluid Mechanics Laboratory (FML) 48- by 32-inch wind tunnel
- 11.58% model scale

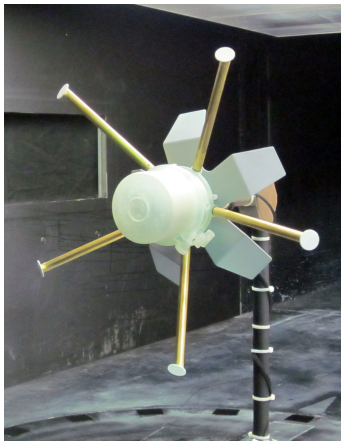

Dynamic Wind Tunnel Tests

- Investigate effects of design configurations (e.g., drag plate size and type) on the lander dynamics
  - Small drag plate
  - Large drag plate
  - Large drag plate with 45° dihedral
- Find configurations that meet the desired flight behavior
  - Pitch attitude less than 5 degrees from vertical most of the time
  - Total pitch/yaw rotation rate less than 10.3 deg/s more than 10% of the time
- Free-flight testing conducted at the NASA LaRC 20-ft Vertical Spin Tunnel
- 25% dynamically (Froude) scaled model
- Model position and attitude recorded with motion capture system concurrently with tunnel operating parameters

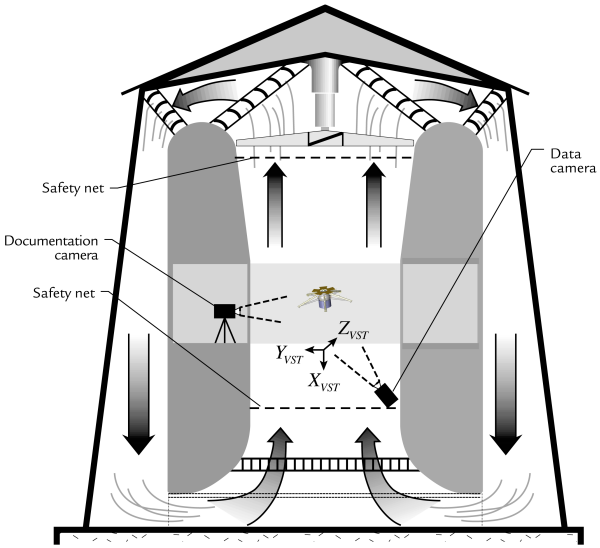

Spin tunnel graphic credit: NASA LaRC

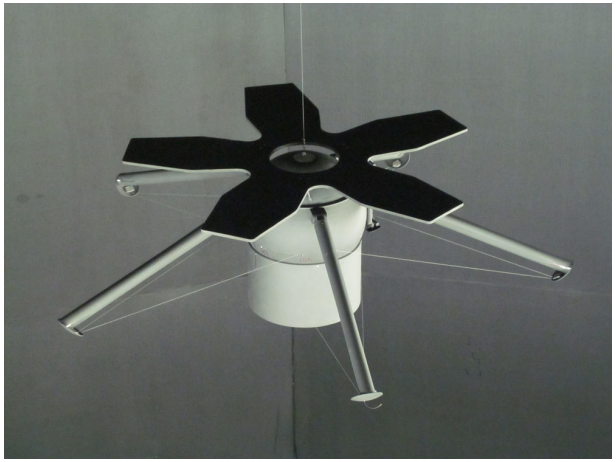

Model Configurations

Static WT Tests

Over 18 configurations were tested using various combinations of:

- Large & small drag plate
- Drag plate dihedral
- Drag plate serrations
- No legs
- Small and large dia. legs

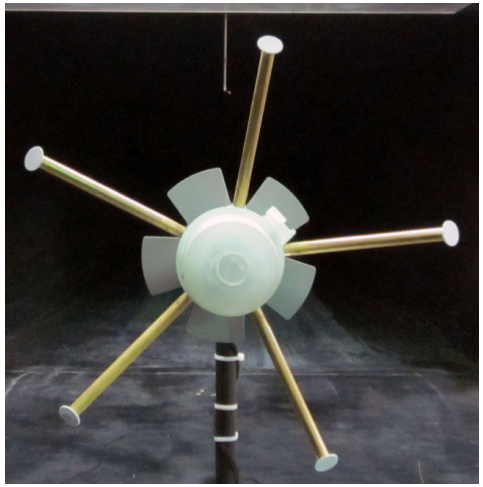

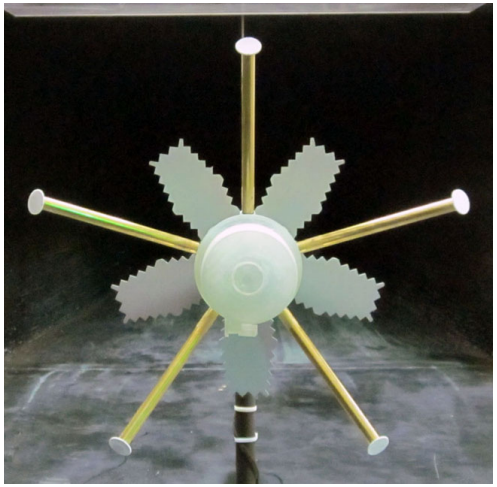

Dynamic WT Tests

Configurations tested included:

- Large drag plate
- Large drag plate with 45° dihedral
- Small drag plate

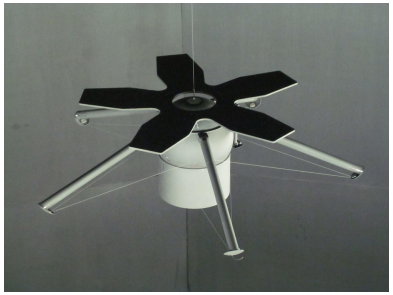

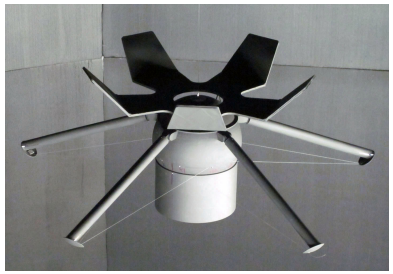

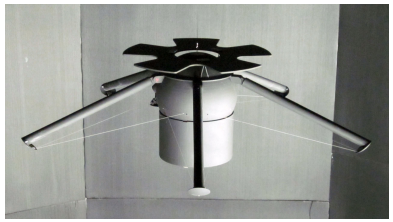

Static Wind Tunnel Test Results

Axial Force Coefficient Summary

Drag Plate Configuration	Venus Altitude	C_A	Landing Speed
Small	> ~60 km	3.63	
Small	Surface	2.80	12.0 m/s
Large	> ~60 km	6.54	
Large	Surface	5.88	8.3 m/s
Large w/ 45° Dihedral	> ~60 km	4.96	
Large w/ 45° Dihedral	Surface	4.48	9.5 m/s

- Reference area for C_A is 0.567 m^2 (payload sphere projected area)
- Values of C_A above at zero degree total angle of attack
- Landing speed calculated by assuming
  - lander mass = 840 kg
  - acceleration of gravity = 8.87 m/s^2
  - atmospheric density = 64.8 kg/m^3

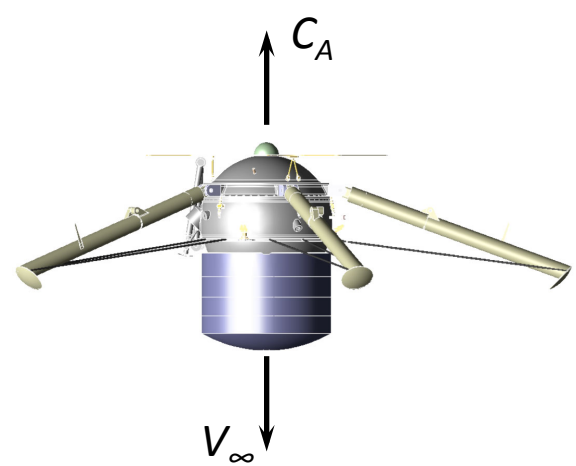

Static Wind Tunnel Test Results

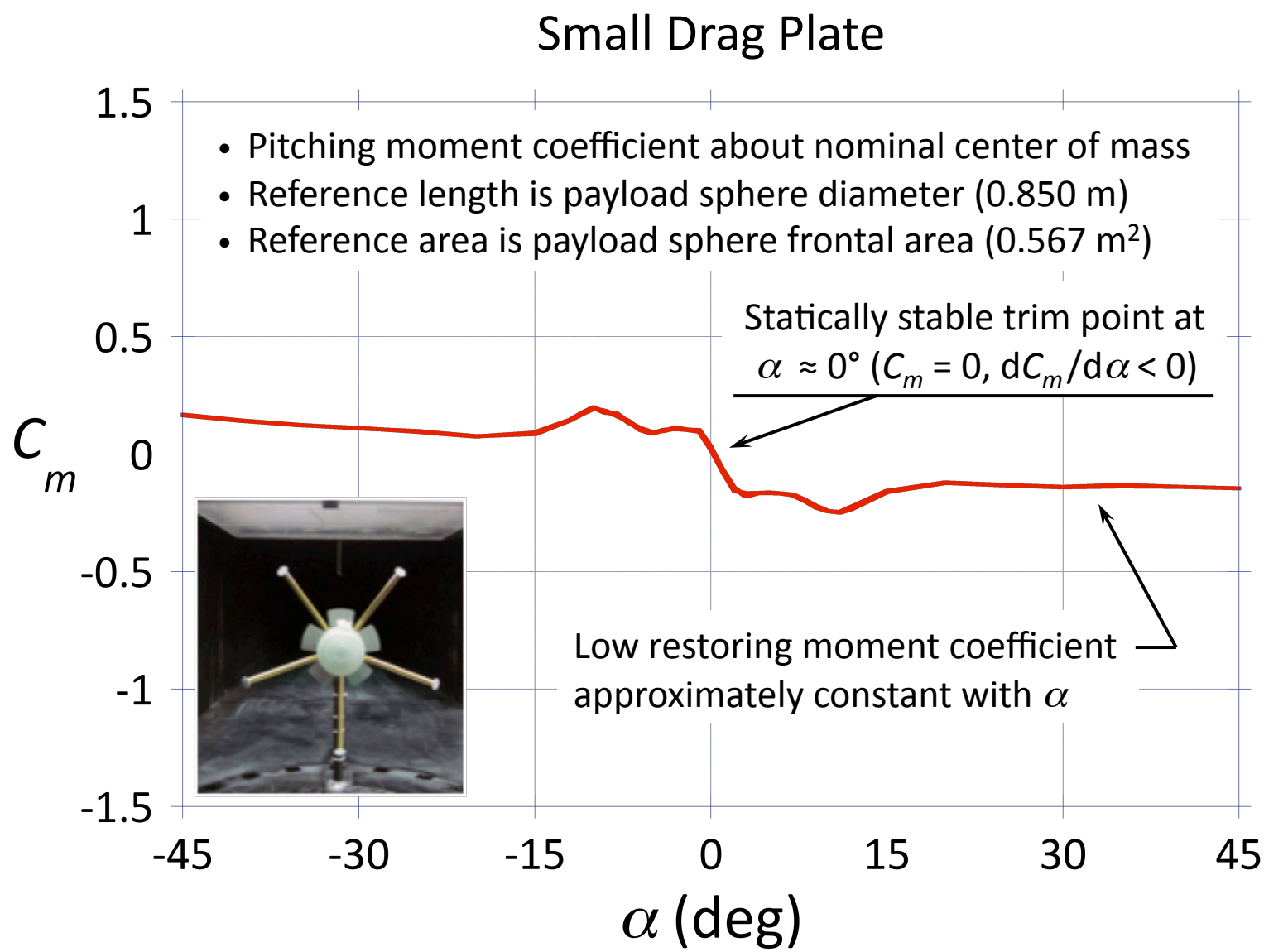

Static Wind Tunnel Test Results

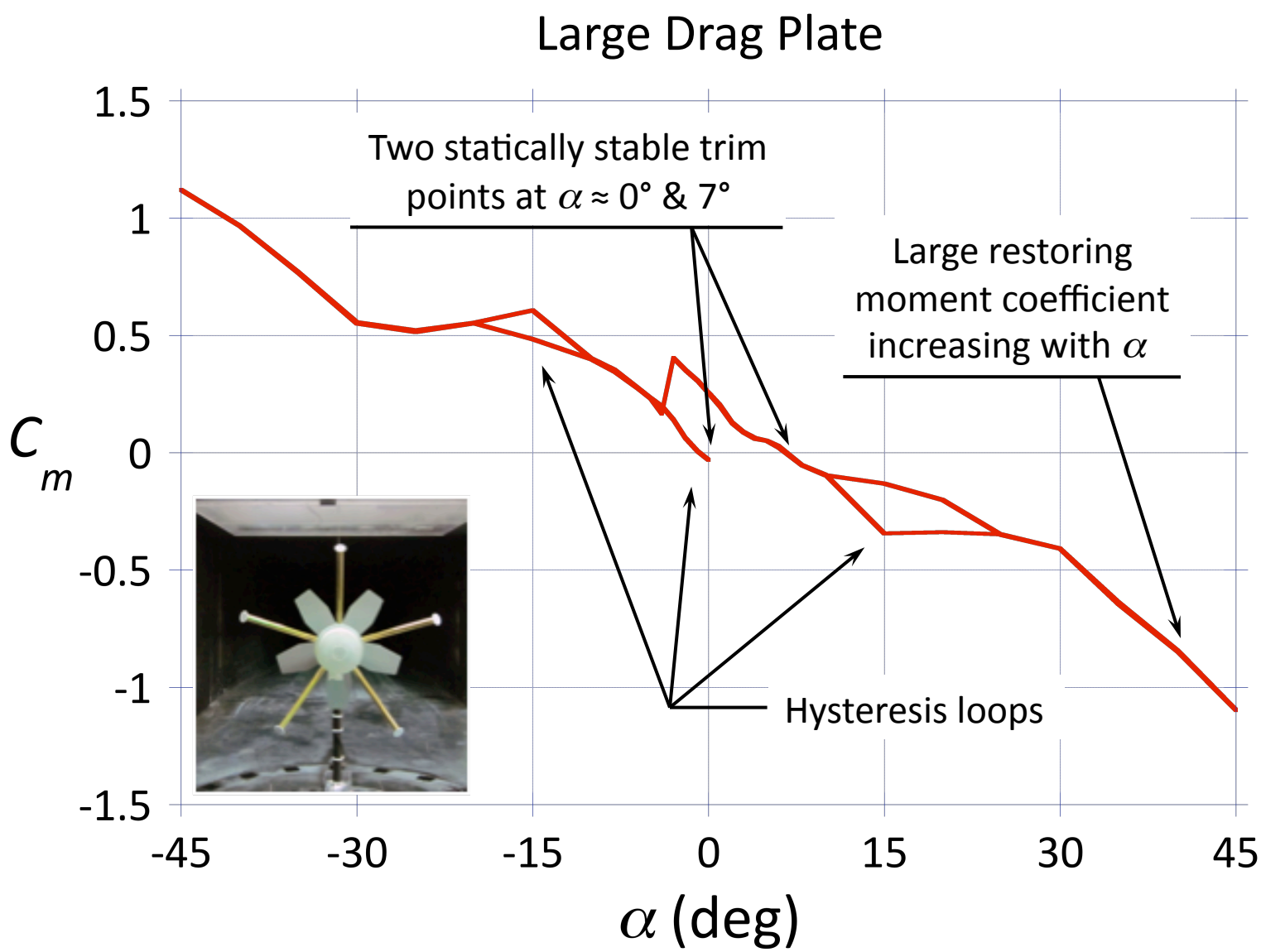

Static Wind Tunnel Test Results

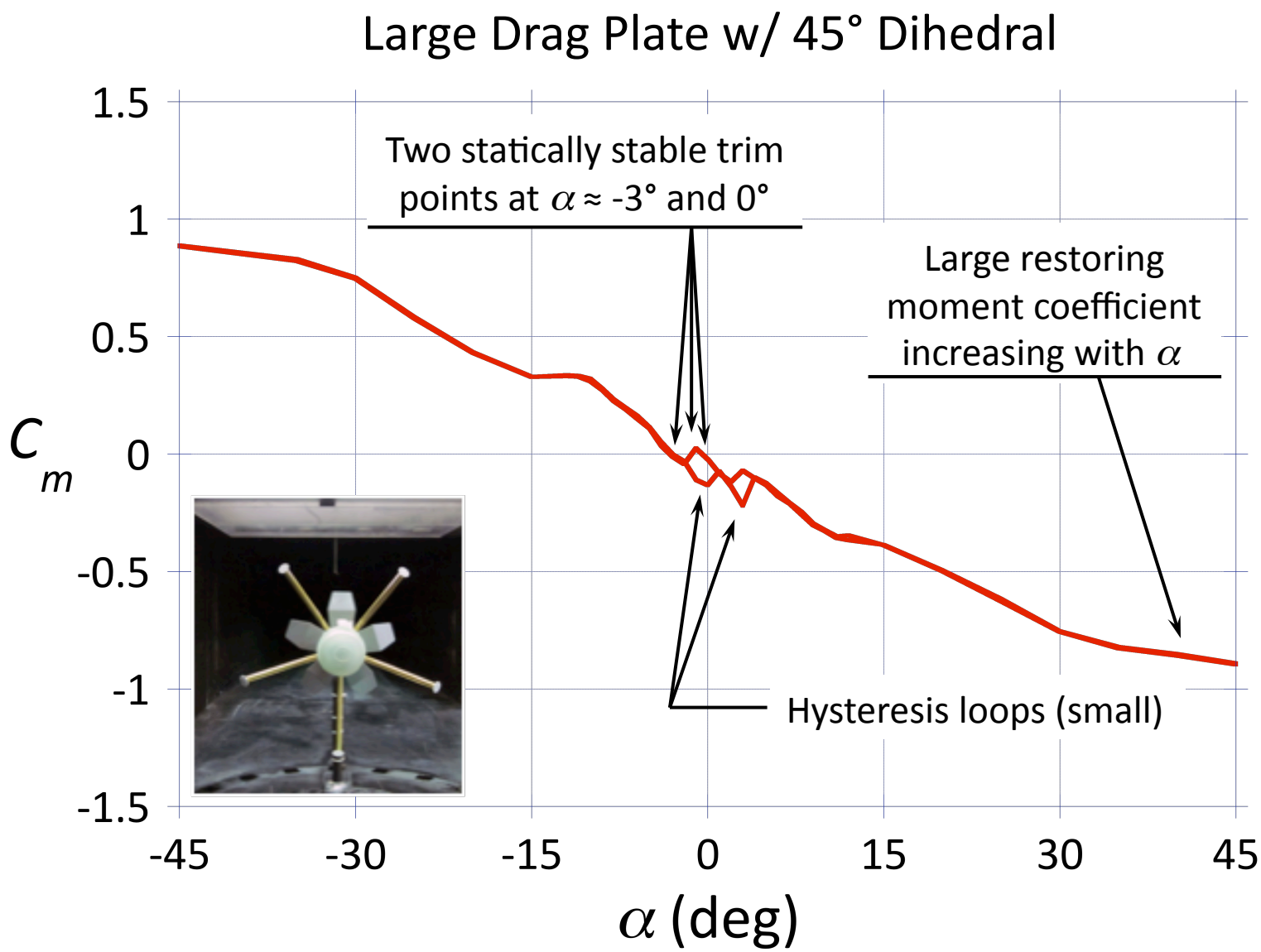

Dynamic Wind Tunnel Test Results

Large Drag Plate – Unperturbed Motion

Dynamic Wind Tunnel Test Results

Large Drag Plate – Perturbed Motion (1 of 2)

Dynamic Wind Tunnel Test Results

Large Drag Plate – Perturbed Motion (2 of 2)

Dynamic Wind Tunnel Test Results

Large Drag Plate – Shift in Trim Angle of Attack

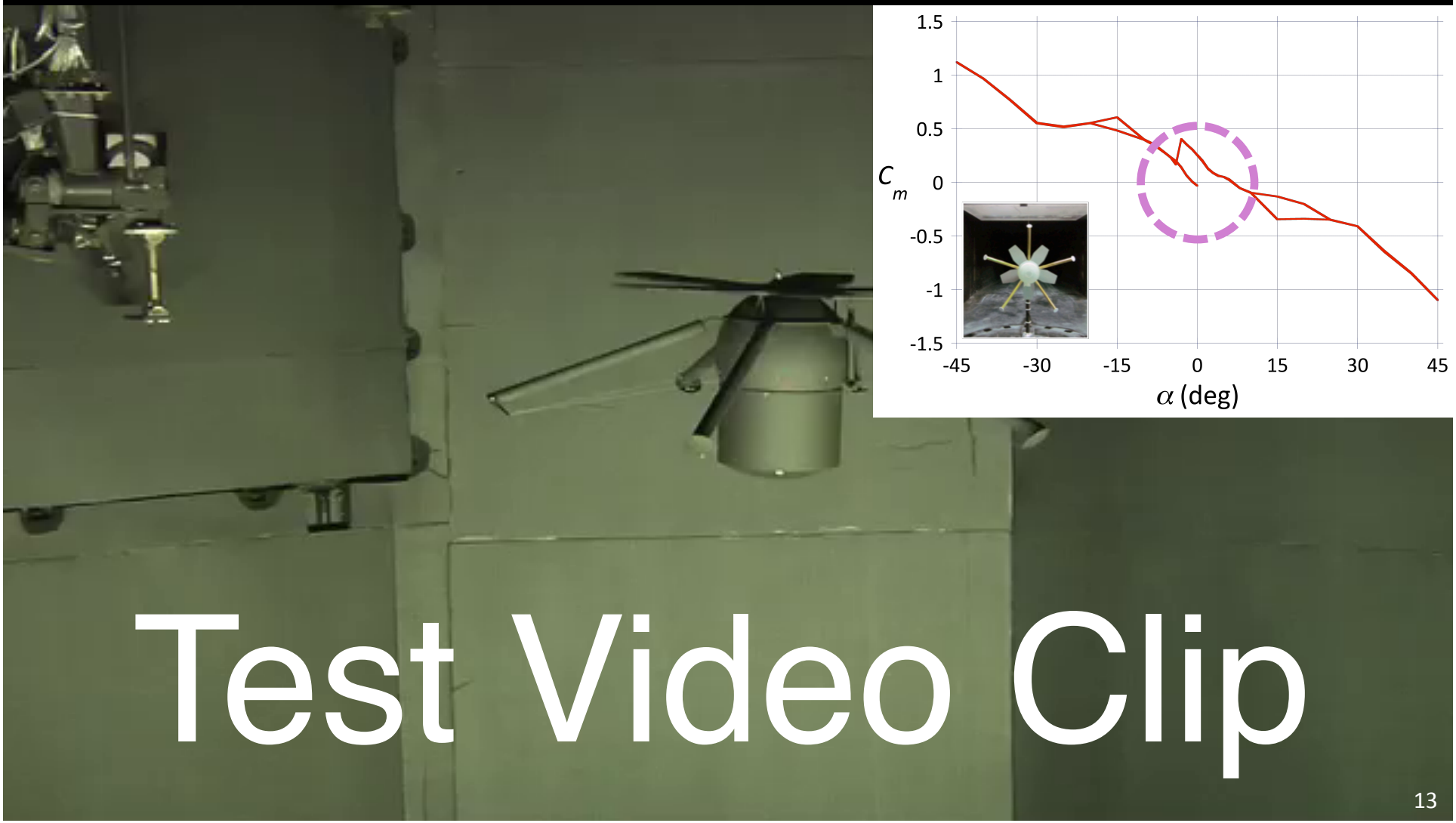

Dynamic Wind Tunnel Test Results

Large Drag Plate w/ 45° Dihedral – Unperturbed Motion

Dynamic Wind Tunnel Test Results

Small Drag Plate – Unperturbed Motion

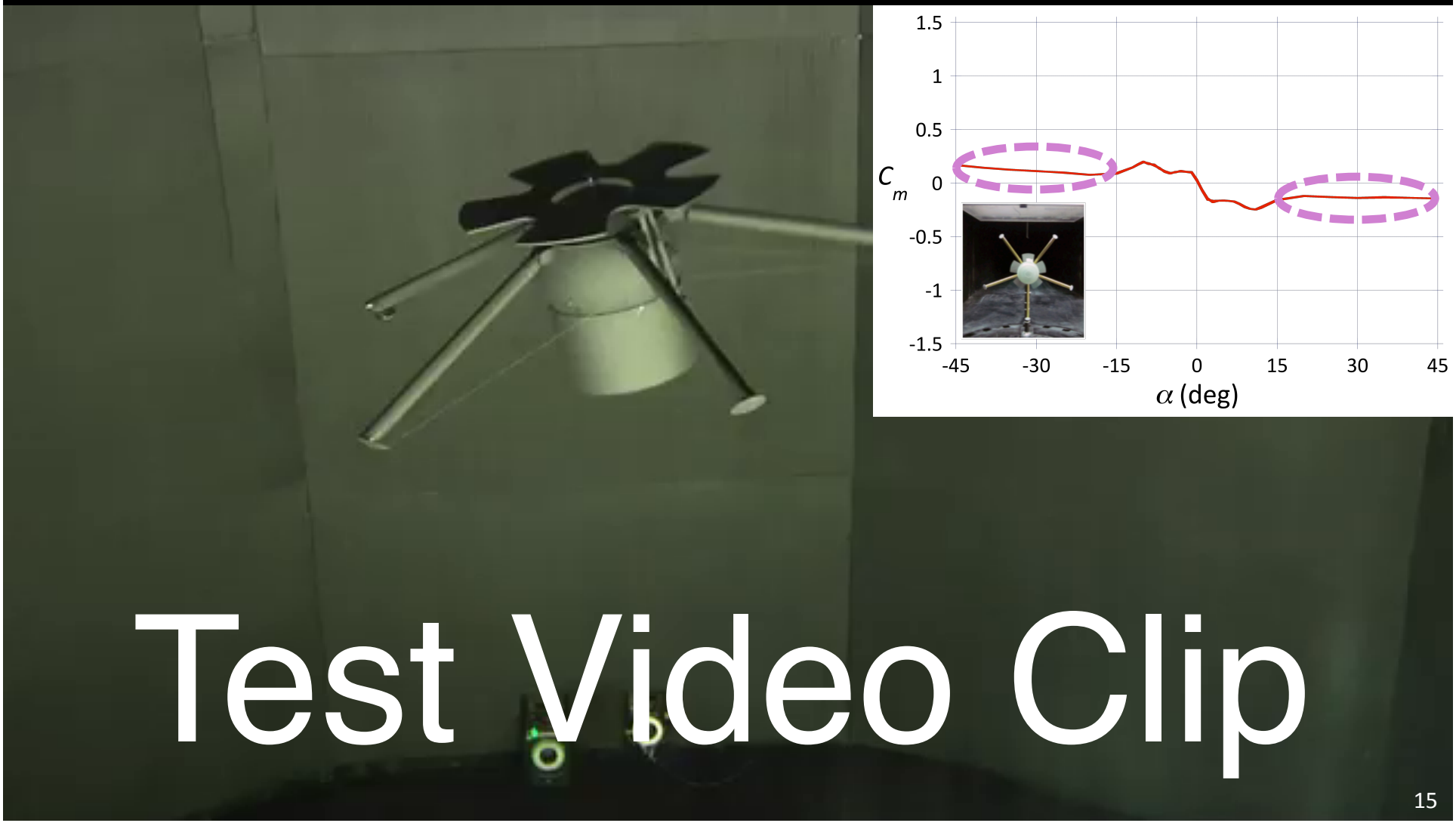

Dynamic Wind Tunnel Test Results

Definition of Θ, ω, and $\omega_{q,r}$

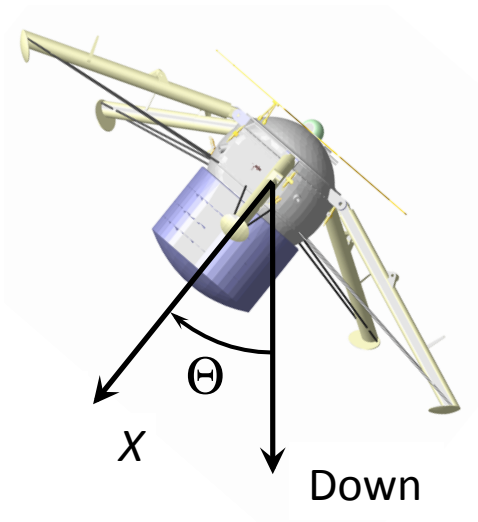

$$\omega = \sqrt{p^2 + q^2 + r^2}$$

$$\omega_{q,r} = \sqrt{q^2 + r^2}$$

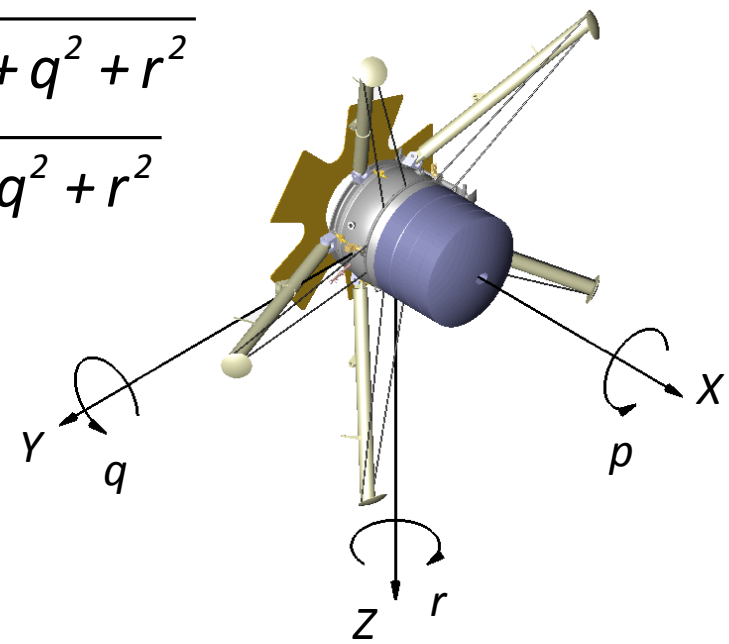

Θ, ω, and $\omega_{q,r}$ calculated from motion capture system data at 150 Hz.

Data statistics for Θ, ω, and $\omega_{q,r}$ from a particular Test Block (i.e., model configuration including mass properties) were used to evaluate lander performance.

Dynamic Wind Tunnel Test Results

Model Configuration	Test Block	Quantile % for $\Theta < 5°$	Quantile % for $\omega < 10.3°/s$	Quantile % for $\omega_{q,r} < 10.3°/s$
Large drag plate	2	97	83	94
	3	83	50	55
	8	92	57	67
Large drag plate w/ 45° dihedral	4	60	6	12

- ω and $\omega_{q,r}$ converted to full-scale lander equivalent
- Results shown are for an equivalent Venus altitude of 20 km
- Variation of results observed between *Runs* within a given *Test Block* and between *Test Blocks* for the same *Model Configuration*

Dynamic Wind Tunnel Test Results

Large Drag Plate – Test Block 3

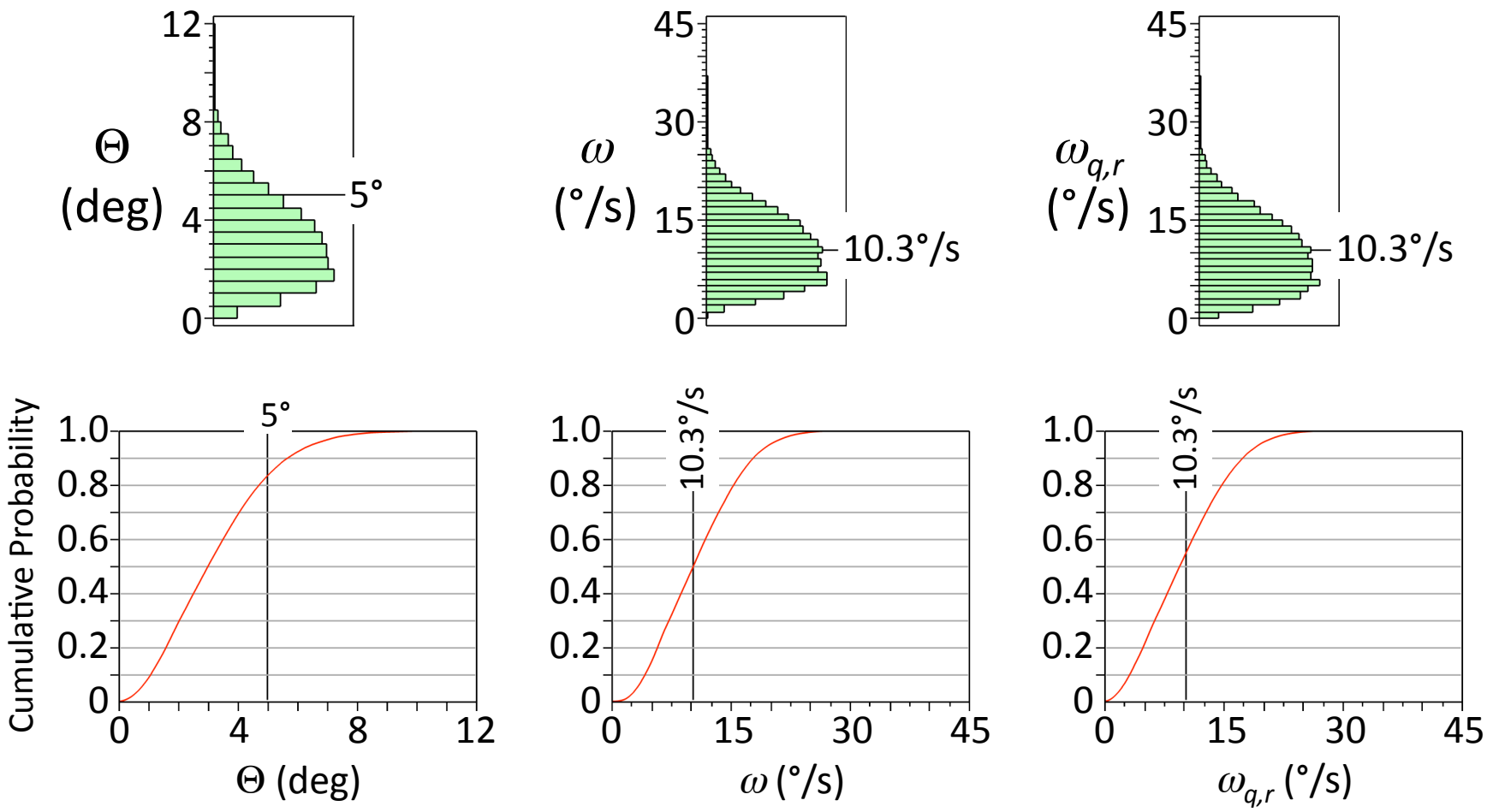

- ω and $\omega_{q,r}$ converted to full-scale lander equivalent
- Results shown are for an equivalent Venus altitude of 20 km

Concluding Remarks

- Final design recommendation was to use the large drag plate with the minimum dihedral necessary to avoid stable trim points at total angles of attack other than zero.

- The effect of differences between the in-flight Reynolds numbers and the test Reynolds numbers (in both static and dynamic tests) needs to be looked at further. The circular cylinder lander legs operate at both sub- and super-critical Reynolds numbers in flight (based on legs diameter). The tests were conducted at sub-critical leg Reynolds numbers.

- The legs provide significant rotational damping. Without legs the lander autorotated during dynamic testing.

- Free-flight drop tests of dynamically (Froude) scaled models should be used to corroborate the results obtained in the vertical spin tunnel. Models nearly identical to those used in the vertical spin tunnel could be used for drop tests (0.8 kg total mass).

Points of Contact

Juan R. Cruz

NASA Langley Research Center
Hampton, Virginia
Juan.R.Cruz@NASA.gov

Anita Sengupta
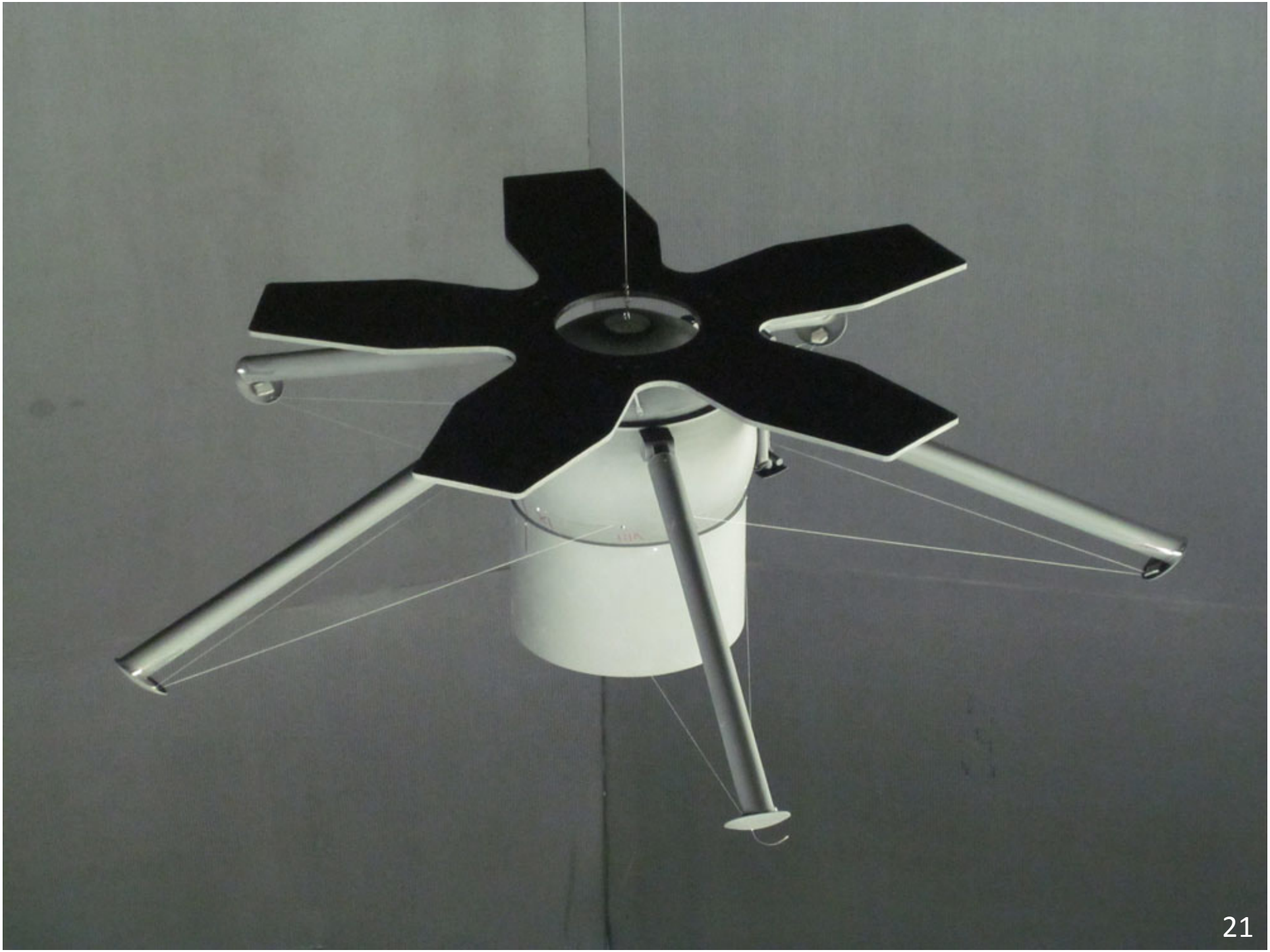
Jet Propulsion Laboratory
Pasadena, California
Anita.Sengupta@JPL.NASA.gov