Aerothermal Analysis for Planetary Probes using DOTNET Framework and OLAP Cubes database

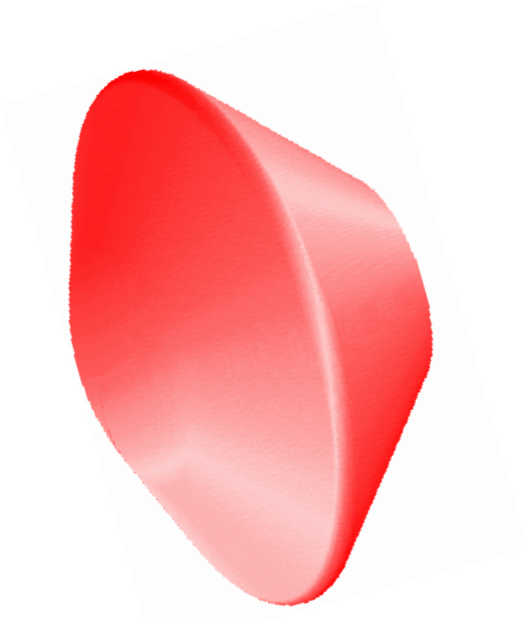

Presented By: Prabhakar Subrahmanyam

(Periklis Papadopoulos, advisor)

Center of Excellence for Space Transportation & Exploration

Department of Mechanical and Aerospace Engineering

San Jose State University

5th International Planetary Probe Workshop

June 23-29, Bordeaux, France

Outline

- Motivation for the Project
- SPARTA Software architecture
- OLAP DB and Capability for Trajectory & CFD
- Probe Flight Vehicle Database (RDBMS)
- SPARTA Fluid Modeling and Trajectory based CFD
- Results and Conclusions
- Online Demo of .NET GUI

Motivation

- **Distributed**: Trajectory engine, Grid generation engine, TPS solver, Aerodynamic and CFD solvers are typically spread out in different programs and in different machine architectures. Integrating these systems can be a challenge!

- **Platform Independence**: Complete System Design S/W Architecture in Java is proposed (Trajectory, CFD, TPS Solvers, Post processing, Visualization etc.)

- **Wrappability**: Heritage code and old architecture makes them unwieldy to wrap within a CFD solver.

- **Fortran Namelists**: Fortran uses a long detailed namelists to generate an input list for the trajectory/CFD engine to parse. No GUI and they are primarily parameter driven

- **Parallel Processing**: Old programs are NOT multi-threaded and hence programmers have to use MPI, OMP or PVM parallel processing schemes. Java supports Threads and programs can be threaded. Sparta Trajectory is coded in Java. *Threads are relatively new since Java.*

Software Architecture: Why Java ?

- **Architecture Neutral**: SPARTA is coded in Java since it is platform independent, programs can be easily distributed and deployed in any platform for execution.

- **Interoperability**: Matlab, C, C++ & Fortran executables can be called.

- **Plotting Utilities**: Java comes with built-in plotting capabilities for visualization.

- **Scientific Computing** Java is also the industry standard tool for scientific computing since it is Object Oriented as well.

- **Web Based**: Java and World Wide Web. Web Server deployment - Programs can be easily converted into Applets and deployed in the web.

- **Parallel Processing**: Java is multi-threaded, explicit thread control is possible and thus it supports Parallel Processing. Eliminates the need for MPI, OMP, etc.. So programmers can focus on the physics at hand rather than the programming components.

Software Architecture System Design

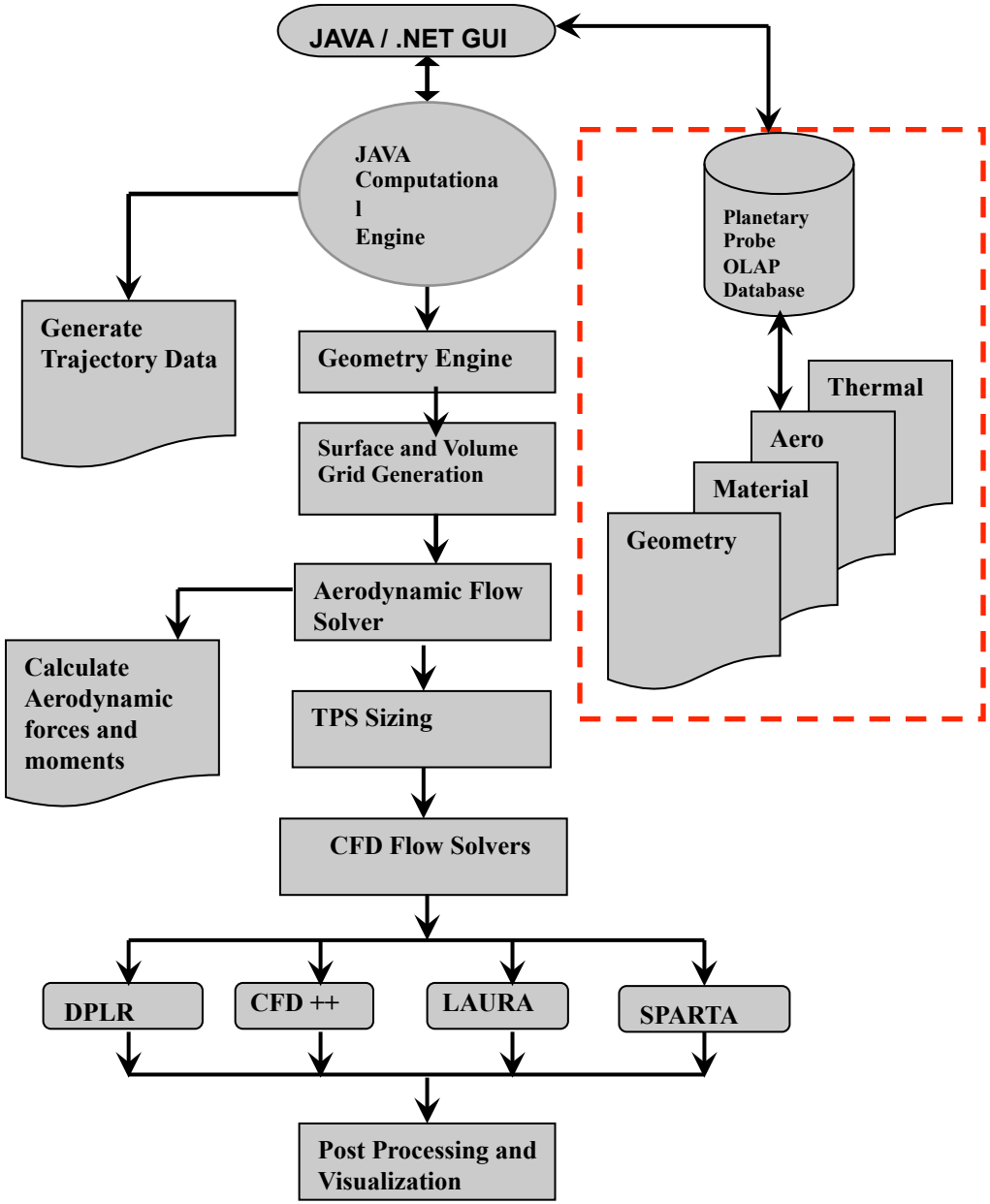

Trajectory Engine TrajGen

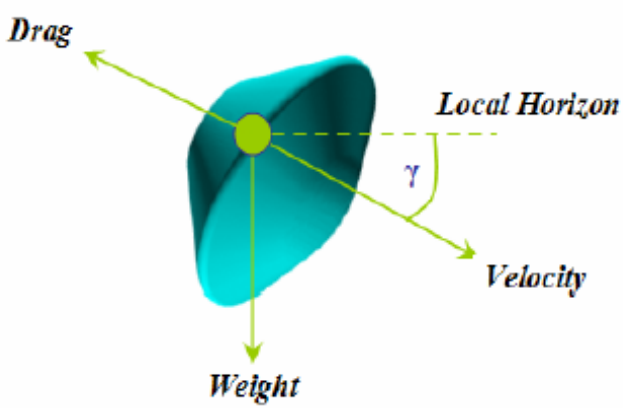

- Point-Mass 3 and 6 DOF Ballistic/Lifting Body entry trajectory code
- Implemented 1976 US Standard Atmospheric Model
- GRAM Models for MARS, Neptune, Titan and Venus atmospheres have been implemented

- Populate GUI with mission specific information from planetary probes DB
- Perform trajectory calculations based on entry conditions and vehicle configuration
- A fourth order Runge-Kutta integration is employed to generate trajectory data
- Stagnation Point heating analysis is performed using the Fay-Riddell and Sutton-Grave correlations for convective. Tauber-Sutton for Radiative transfer.
- Extensive Benchmarking against POST and other industry standard codes

SPARTA (Simulation of Probe Aerothermodynamics Reentry Trajectory Analysis) – JAVA Front GUI

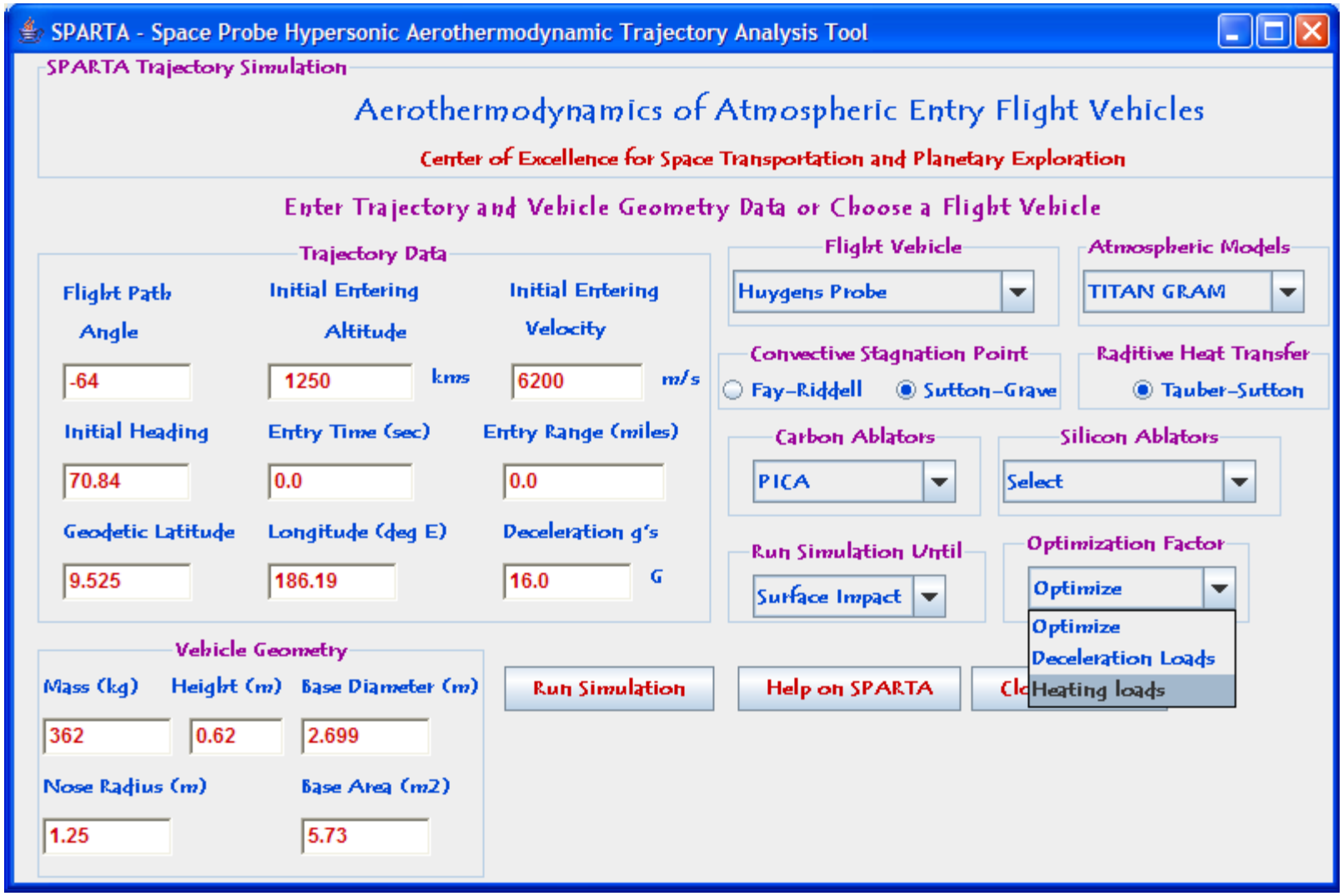

Trajectory Data Calculated by SPARTA

Trajectory Analysis for Flight Vehicle: Apollo 4						
Altitude (ft)	Velocity (ft/sec)	Flight Path Angle ϒ (deg)	Mach Number	Reynolds Number	Stag Point Pressure (lbf/ft^2)	Stag Point Heat Transfer rate q (Btu/ft2-sec)
250000.00	22500.00	12.00	23.83	25524.59	30.70	168.44
249500.00	22500.69	12.00	23.82	26092.81	31.42	170.43
249000.00	22501.37	12.00	23.80	26672.87	32.16	172.43
248500.00	22502.06	12.01	23.78	27265.00	32.92	174.46
248000.00	22502.75	12.01	23.77	27869.44	33.69	176.50
247500.00	22503.43	12.01	23.75	28486.43	34.48	178.57
247000.00	22504.12	12.01	23.73	29116.20	35.28	180.66
246500.00	22504.80	12.01	23.72	29759.02	36.11	182.77

Trajectory Analysis for Flight Vehicle: MARS Pathfinder Probe						
Altitude (kms)	Velocity (km/sec)	Flight Path Angle γ (deg)	Mach Number	Freestream Temperature (K)	Convective Heat Transfer (W/cm^2)	Radiative Heat Transfer (W/cm^2)
60.20	7.40	9.56	40.00	130.11	58.10	1.40
55.80	7.34	9.26	37.20	147.45	69.80	2.30
50.09	7.16	8.84	34.60	163.78	85.40	3.80
45.32	6.89	8.48	33.20	164.06	98.30	5.20
40.05	6.38	8.09	30.10	172.01	100.10	3.60
35.09	5.59	7.74	26.40	172.26	85.70	2.09

SPARTA OLAP Cubes

- Cubes are the logical storage medium for an OLAP database. The cube to an OLAP database is what the table is to an RDBMS.
- Several values for design parameters (dimensions) are changed in SPARTA cubes which is linked to the trajectory code. Cubes provide a capability to change up to 64 design parameters.
- Cubes give the ability to model multiple loops in the trajectory code without having to write loops. Modeling 64 loops is labor some, OLAP Cubes models the loops in the trajectory code automatically.
- The trajectory code is run once and the database is populated by varying these design parameters.
- SQL Queries are employed to drill-down the data for specific flight conditions.

Massive Data Populated back in the DB

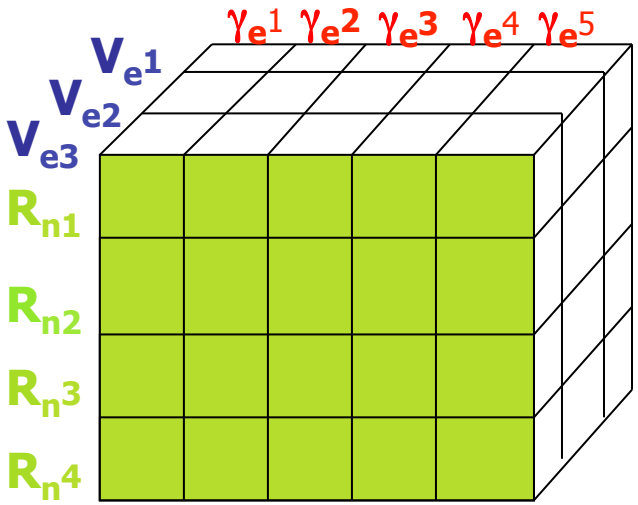

SPARTA Cubes have five different entry values for these three dimensions (design parameters).

(a) initial flight path angles,
(b) Initial entry velocity and
(c) Nose radius

This populates the cubes with 125 permutations and combinations for each point in the altitude integration.

The term cube implies *three dimensions*. In fact OLAP server cubes can be modeled up to 64 design parameters for five different values for every planetary probe vehicle.

OLAP Probes Database and OLAP Build Flow

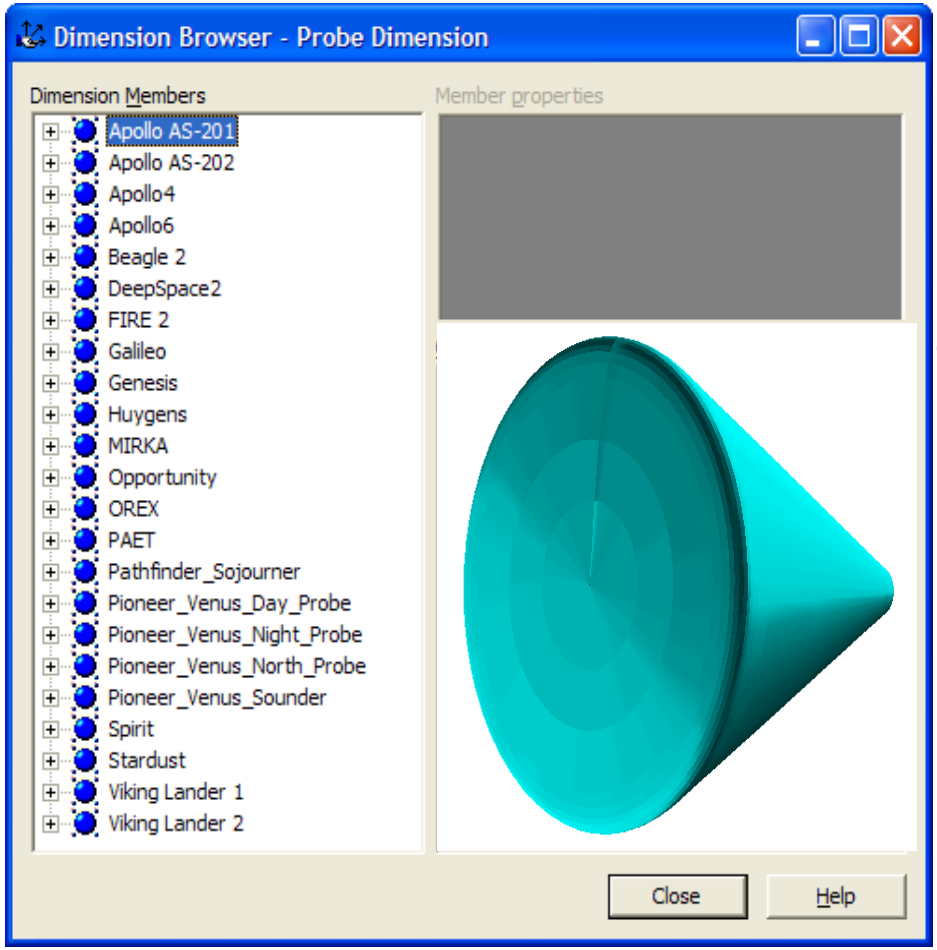

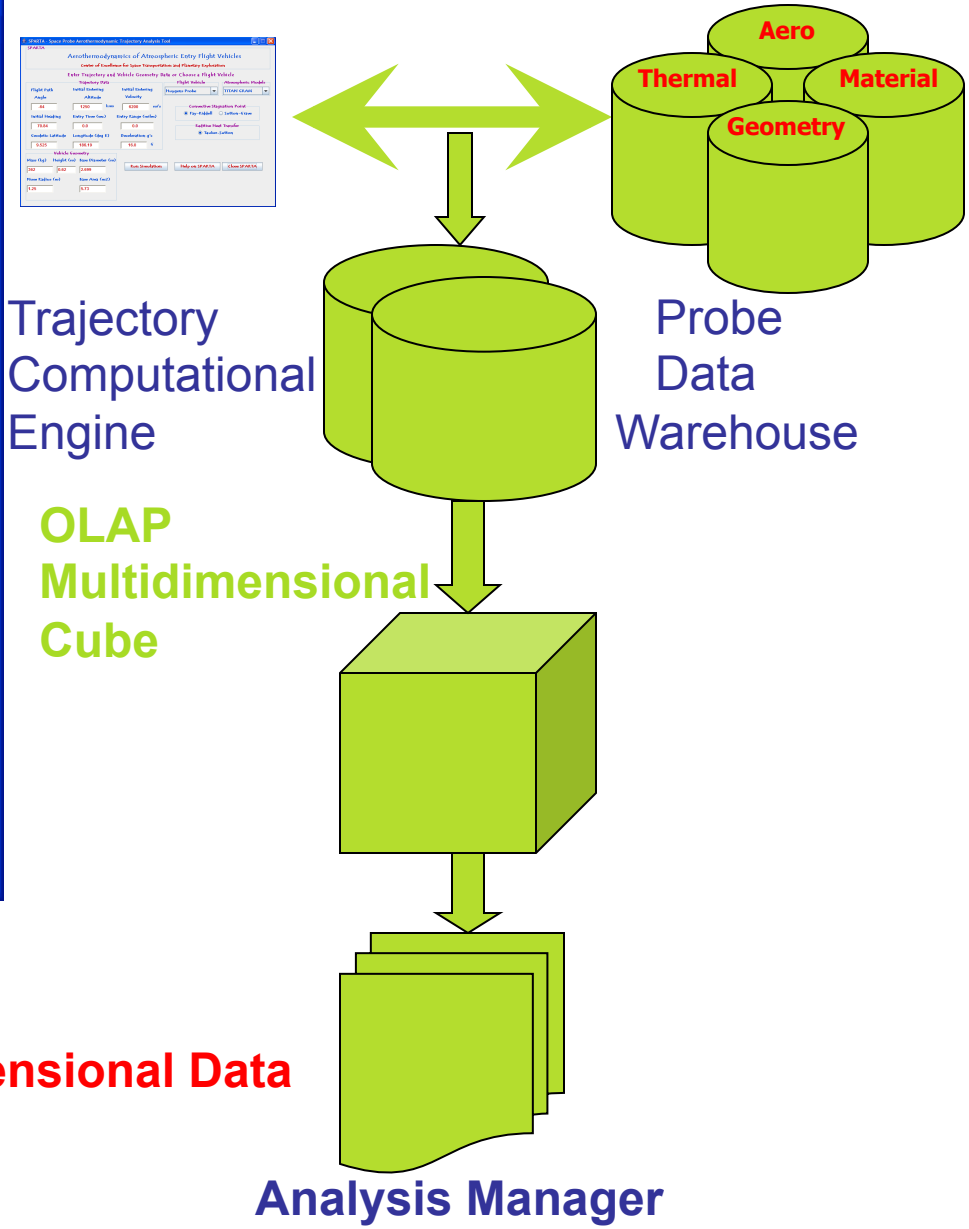

SPARTA Trajectory Optimization

- Once the trajectory is populated, SPARTA is able to give out a number of trajectory profiles for a successful reentry.
- Also, based on the optimization factor (a). Deceleration loads or the (b). heating loads that is chosen from the GUI, SPARTA trajectory engine automatically plots the best trajectory in terms of the minimal optimized loads.
- From this optimized trajectory profile, the vehicle entry conditions are also determined since there were several values for multiple design parameters that were involved during the simulation run.
- Thus a reverse-engineering procedure is adopted for choosing the best entry conditions based on the heavy volumes of trajectory data which has been generated in the database.

Automatic looping of the design parameters in OLAP

```
for Rn=4.69:1:9.69  % 5 different values with an increment of 1
        for fpa=-6.5:1:-11.5
            for Ve=12500:1000:17500
                for n4= 1:5
                    for n5=1:5
                            :
                            :
                            :
                        for n64
                            % Trajectory calculations inside the 64 loops
                        end
                    end
                end
            end
        end
end
```

Mathematics of trajectory data storage

- **For every point in the altitude integration, changing all the 64 design parameters for a simulation run having five different values for each design parameter comprises 64 loops with five different values each and populates 27 *terabytes* of data in the database.**
- **This is just for one point in the altitude starting at an atmospheric interface of 400,000 feet for Apollo type vehicles. An user specified altitude increment of say 1000 feet up to a *zero* feet at splashdown involves 400 simulations as the vehicle traverses in the trajectory.**

This involves populating the database with (27)(400) = 10800 *terabytes.* Choosing few design parameters generates little data and occupies little data storage space. A judicious set of design parameters for the probe becomes mandatory. Also, for such high volumes of data, efficient data mining techniques becomes imperative. Multi-dimensional trajectory analysis is made possible with Intel Servers.

OLAP driven Trajectory Analysis at different Entry angles, Entry Velocities and Nose radii

Apollo 4, Entry angle: -12.0°, Entry Velocity:22500 ft/s, Nose Radius: 4.69m						
Altitude (ft)	Velocity (ft/sec)	Flight Path Angle γ (deg)	Mach Number	Reynolds Number	Stag Point Pressure (lbf/ft^2)	$\dot{q}_{conv}$ Stagnation Point Heat Transfer (W/cm^2)
250000.00	22513.69	12.00	23.83	65486.33	30.70	391.30
249000.00	22512.32	12.00	23.80	68432.20	32.16	395.82
248000.00	22510.96	12.01	23.77	71501.97	33.69	400.44

Apollo 4, Entry angle: -6.93°, Entry Velocity: 36545 ft/s , Nose Radius: 5.69m						
Altitude (ft)	Velocity (ft/sec)	Flight Path Angle γ (deg)	Mach Number	Reynolds Number	Stag Point Pressure (lbf/ft^2)	$\dot{q}_{conv}$ Stagnation Point Heat Transfer (W/cm^2)
250000.00	36545.00	6.93	33.75	106364.35	81.02	482.53
249000.00	36544.30	6.92	33.75	111144.56	84.87	482.90
248000.00	36544.00	6.91	33.70	116125.59	88.89	483.01

Aerodynamic Properties of the Vehicle

Modified Newton Flow Theory

- Aerodynamic properties of the vehicle are subsequently derived from the geometry of the vehicle
- Modified Newton Flow theory is used to evaluate the pressure coefficient Cp around the body
- C_{pmax} is evaluated as the maximum pressure coefficient found behind a normal shockwave at the stagnation point.

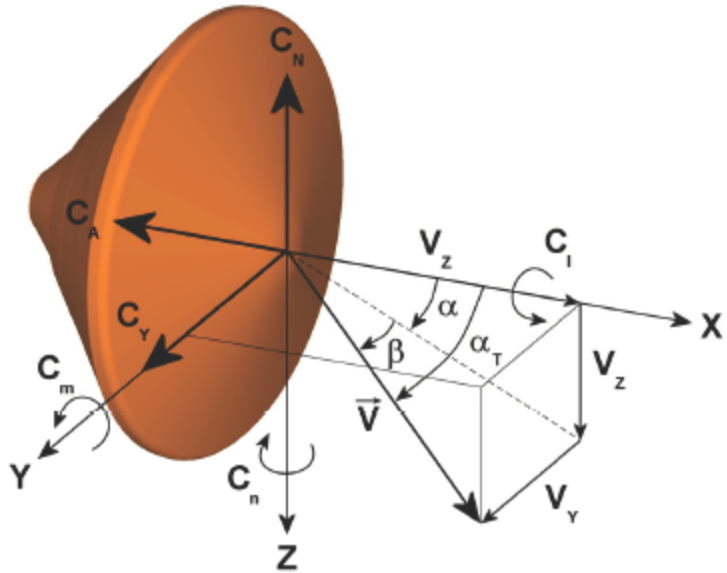

Ballistic Coefficient

- The higher the β, higher the heating and deceleration loads.
- Once β is known, SPARTA provides a number of entry profiles for various entry velocities (V_e) and flight path angles (γ_e)

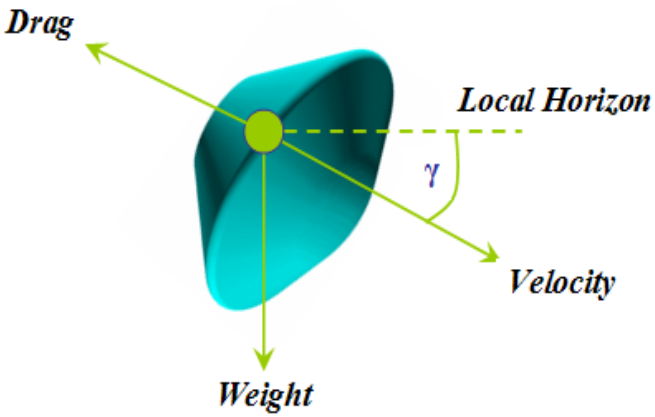

Probe Geometry Flight Vehicle DB (RDBMS Data Design)

San José State University

Database of Entry Vehicles and Atmospheric Flight Entry Data

Flight Vehicles	Configuration (Shape)	Inertial Entry Velocity [Km/s]	Relative Entry Velocity [Km/s]	Inertial Entry Angle [deg]	Peak heat Velocity [km/s]	Center of Gravity X_{CG}/D
Apollo AS-201	Capsule 33 ° Cone		7.67	-8.58°	7.77	0.27
Apollo 4	Capsule 33 ° Cone	11.14	10.73	-6.92°	10.25	0.27
Apollo 6	Capsule 33 ° Cone	10.00	9.60	-5.90°	8.32	0.27
Genesis	59.81 ° Blunt Cone	11.00	10.80	-8.00°	9.2	0.33
Pathfinder	70 ° Cone	7.26	7.48	-14.06 °	6.61	0.27
Viking Lander I	70 ° Sphere Cone	4.61	10.80	-8.00°	4.02	0.219

Database of Entry Vehicles and Geometric Dimensions

Flight Vehicles	Mass [kg]	Length [m]	Base Diameter [m]	Nose Radius [m]	Base Area [m^2]	Control Method
Apollo AS-202		3.62	3.91	4.69	12.02	Roll Modulation
Apollo 4	5424.9	3.62	3.91	4.69	12.02	Roll Modulation
Apollo 6	5424.9	3.62	3.91	4.69	12.02	Roll Modulation
Genesis	210	0.93	1.51	0.43	1.78	Ballistic
Pathfinder	585.3 (entry)	1.508	2.65	0.66	5.52	Ballistic
Viking Lander I	980	1.66	3.54	0.88	9.65	3 axis RCS

Design

Material and Thermal Properties of Carbon and Silicon based Ablators

Material	Material Type	Density (ρ) (kg/ m^3)	Thermal Conductivity (watt/m-°k)	Specific Heat (C_p) (J/kg-°k)	Heat of Ablation (H) MJ/kg	Ablation Temperature (Ta) °k
ATJ	Carbon based	1729.2	117.69	711.76		
Avcoat 5026-39	Silicon based	512.6	25.0	1110.0	47	835
RCC	Reusable CC	1650.2	120.0	1312.0		

Calculating the in-depth temperature response is accomplished using a *finite-difference* formulation for the in-depth conduction through the material.

The one dimensional heat conduction equation can be written along with the surface energy balance as shown here :

$$\rho c_p \frac{\partial T}{\partial t} = \frac{1}{A}\frac{\partial}{\partial x}\left(\kappa A \frac{\partial T}{\partial x}\right) \quad \text{and} \quad \dot{q}_{conv} + \alpha \dot{q}_{rad} - \dot{q}_{cond} - \varepsilon \sigma T^4_w = 0$$

Trajectory Results

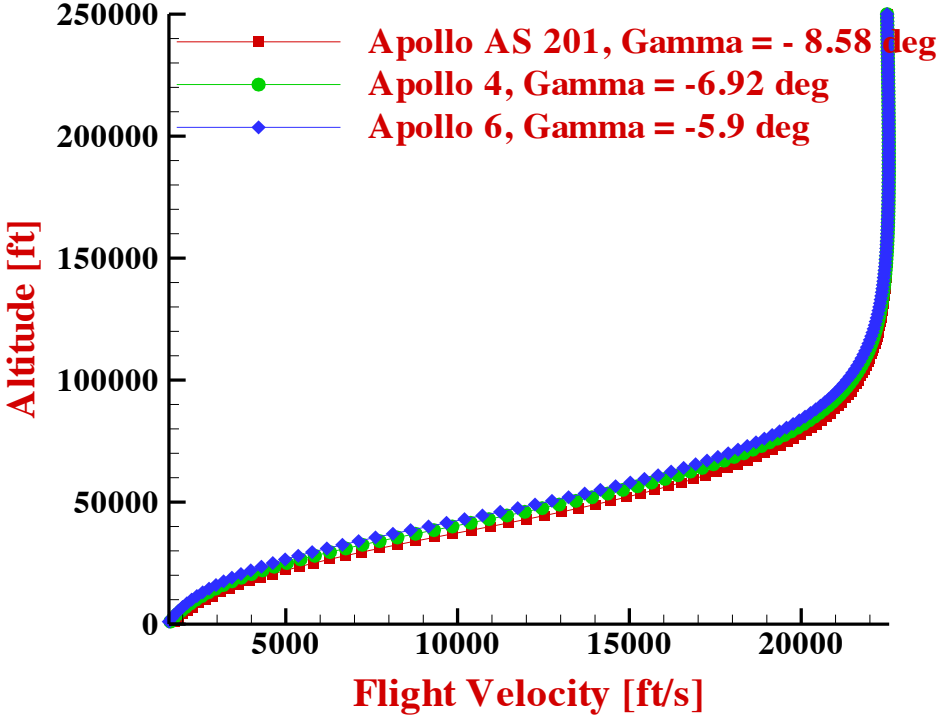

Flight Velocity Vs Altitude

Stagnation Point Convective heat transfer

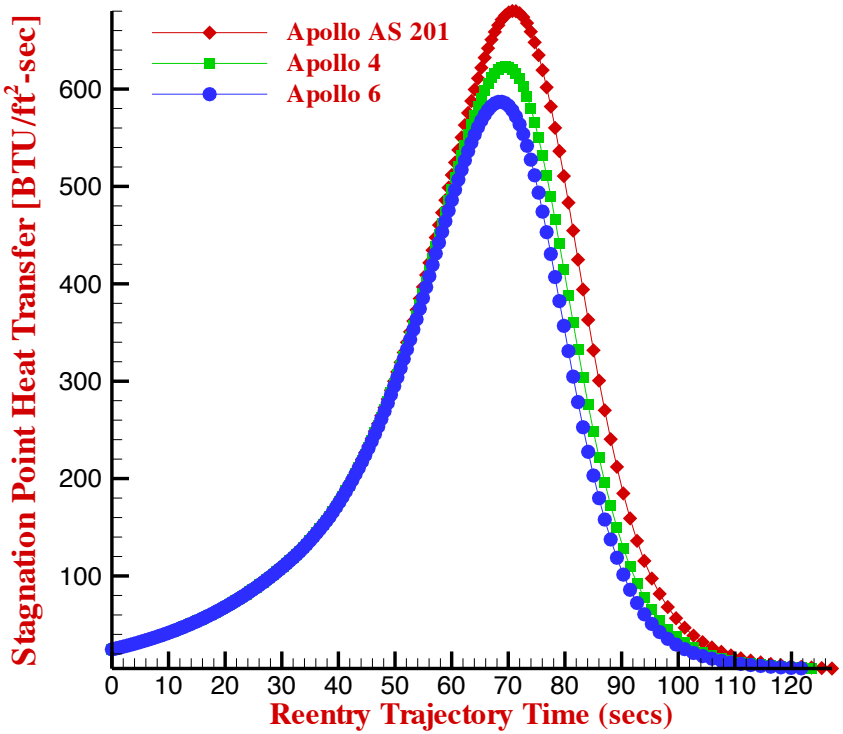

Benchmarking SPARTA Pathfinder Data

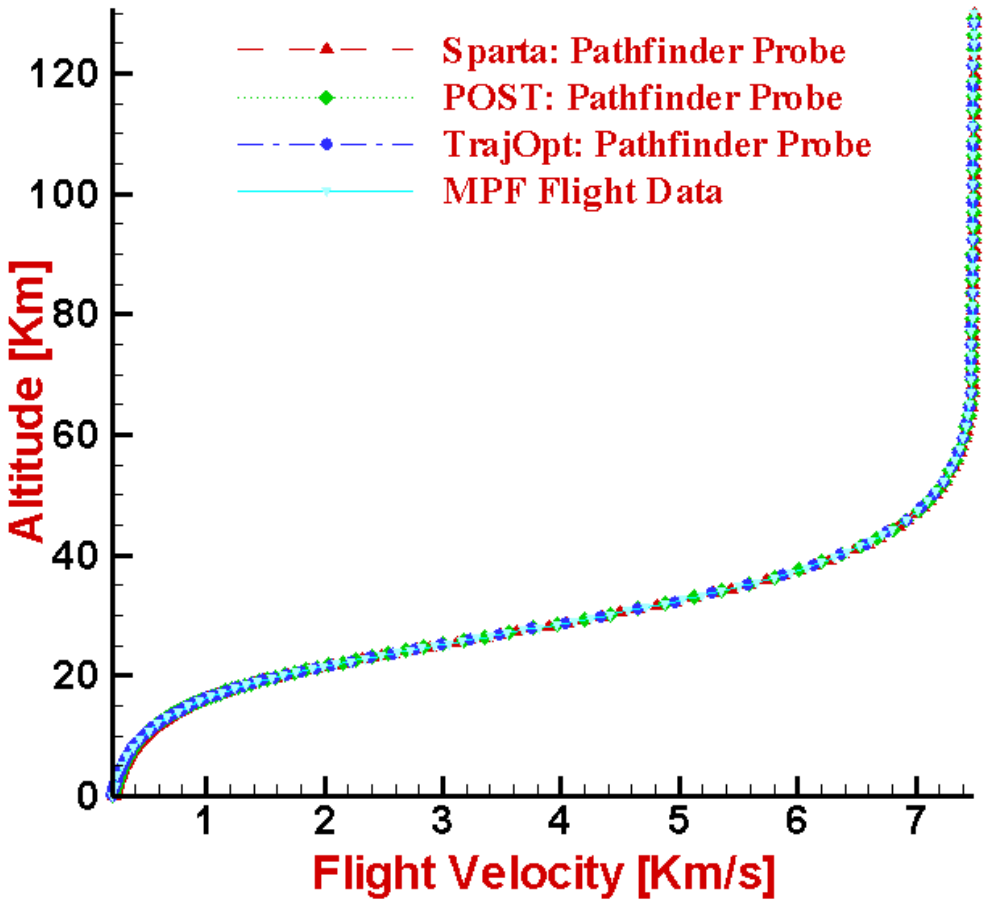

Benchmarking Trajectory Analysis for Pathfinder at an entry angle of -13.65°

Codes	Velocity at Peak heating (km/s)	Altitude at Peak heating (km)	Maximum Deceleration [g's]	Convective Heat Flux (W/Cm^2)
POST	6.5	41.5	16.50	101.13
TrajOpt	6.7	39.5	17.80	119.79
SPARTA	6.5	41.0	16.26	101.56

Benchmarking SPARTA: Apollo Data

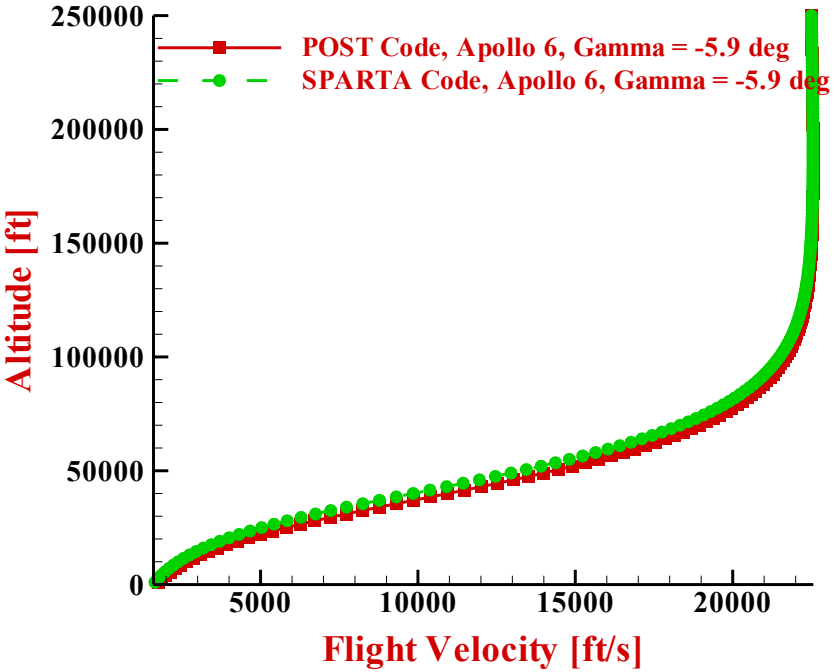

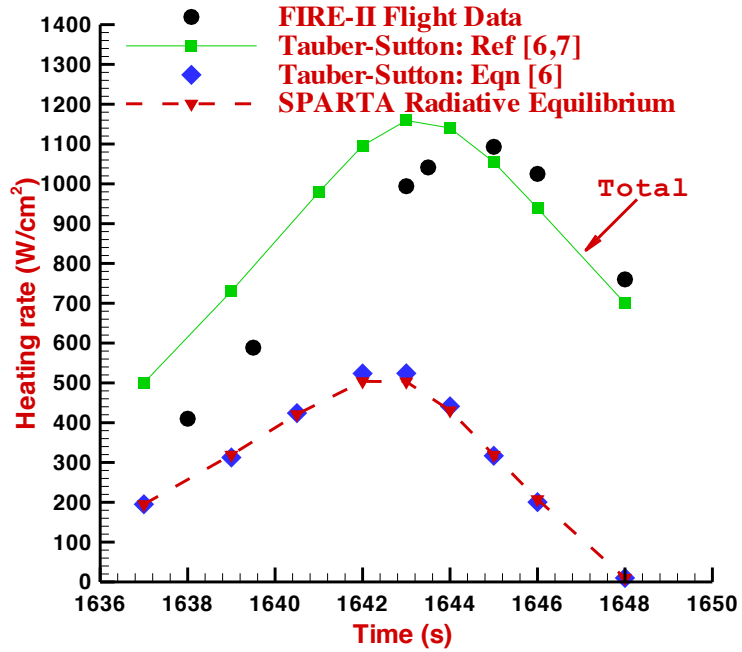

Benchmarking Trajectory Analysis for Apollo 6 at an entry angle of -5.9°

Codes	Velocity at Peak heating (km/s)	Altitude at Peak heating (km)	Maximum Deceleration [g's]	Mach Number
POST	8.45	24.01	12.15	26.40
TrajOpt	7.98	23.00	11.16	24.93
SPARTA	8.32	23.16	11.96	26.00

[6]. Tauber, M. E., "A Review of High-Speed, Convective Heat Transfer Computation Methods", NASA TP-2914, July 1989.

[7]. D. L Cauchon, "Radiative Heating Results from the FIRE II Flight Experiment at a Reentry Velocity of 11.4 Kilometers per Second," NASA TM X-1402, July 1967.

Probe Geometry Database

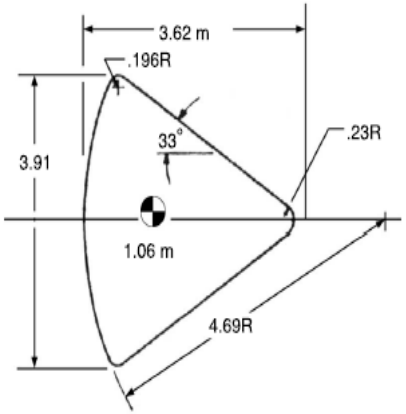

Apollo AS-201, Apollo4, Apollo6

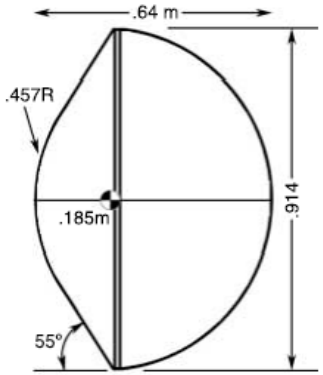

PAET

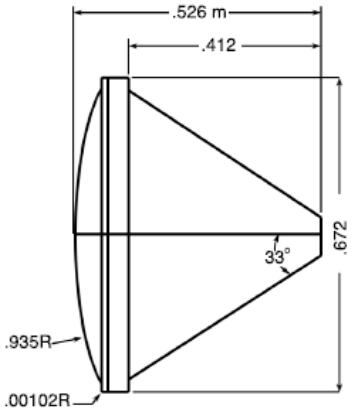

FIRE II

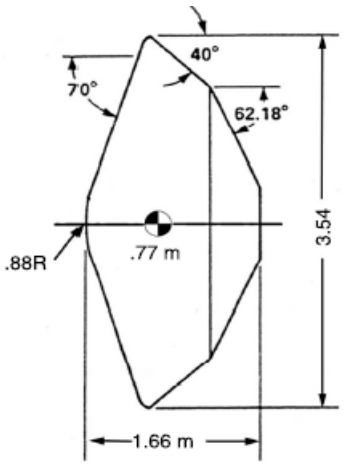

Viking Lander I and II

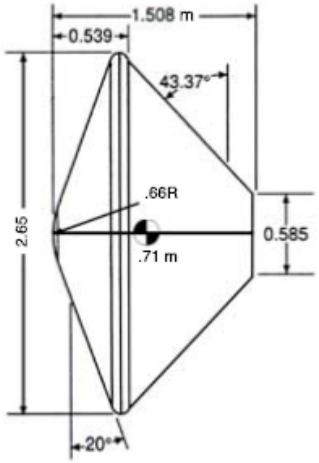

Pathfinder

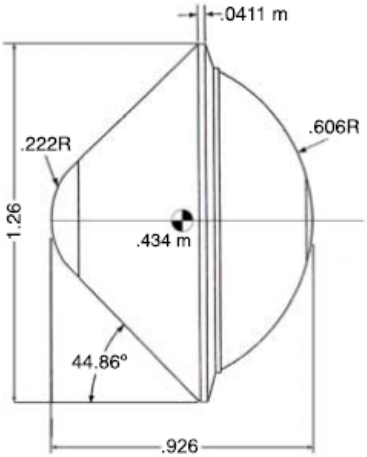

Galileo

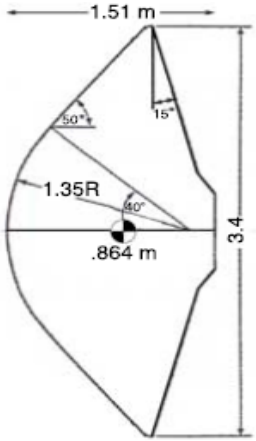

OREX

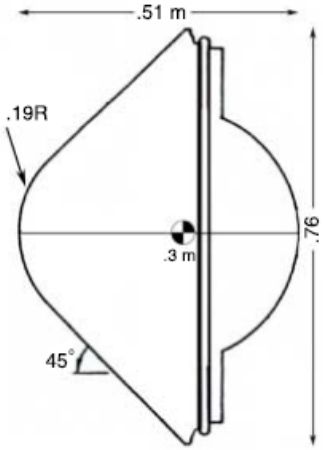

Pioneer-Venus

Probe Geometry Database - ProbeGeoDB

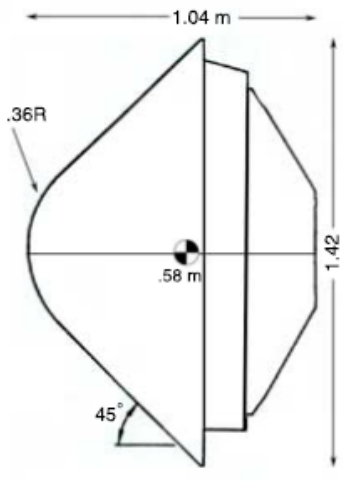

Pioneer-Venus (Sounder large Probes)

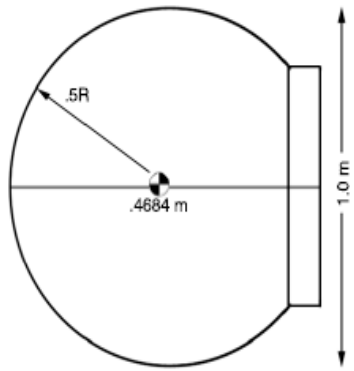

Mirka

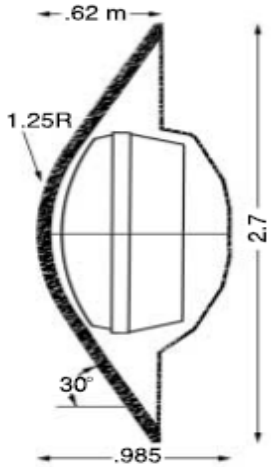

Huygens

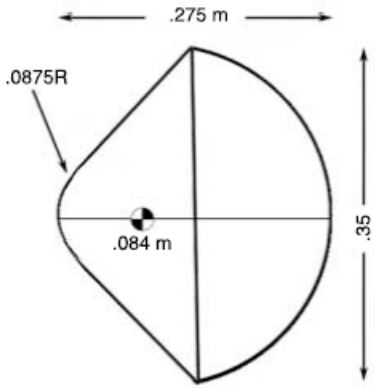

Deep Space 2

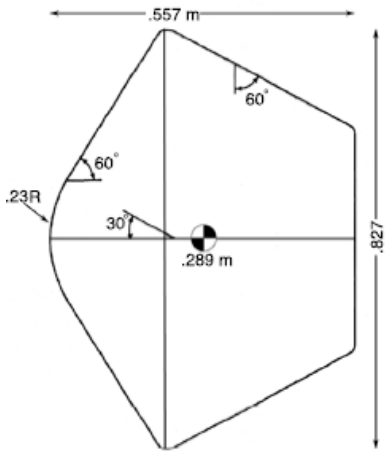

Stardust

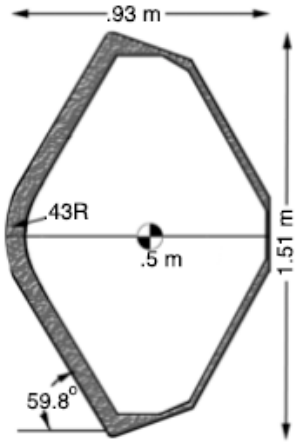

Genesis

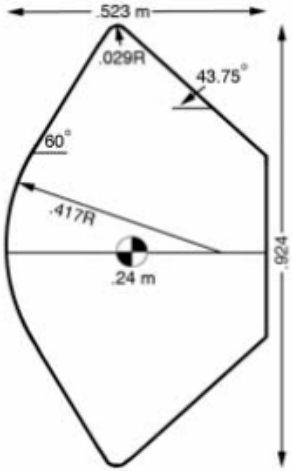

Beagle 2

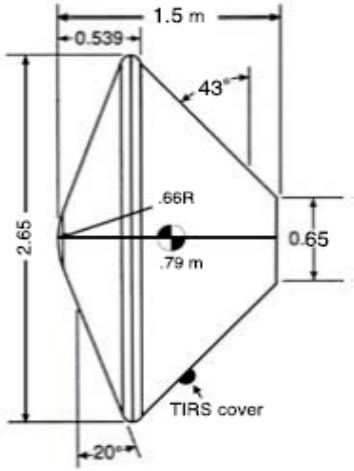

MARS Exploration Rovers (Spirit and Opportunity)

Automated Probe Geometry Builder SpartaGen

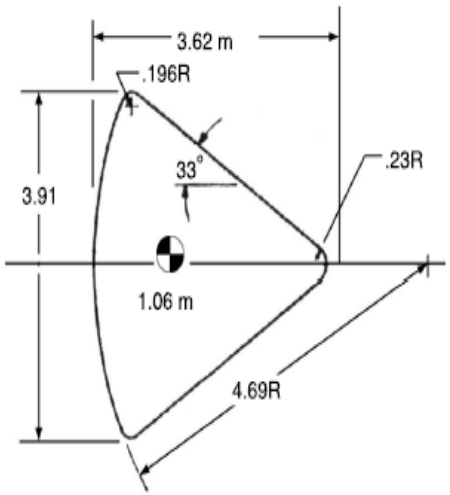

Apollo AS-201, Apollo4, Apollo6

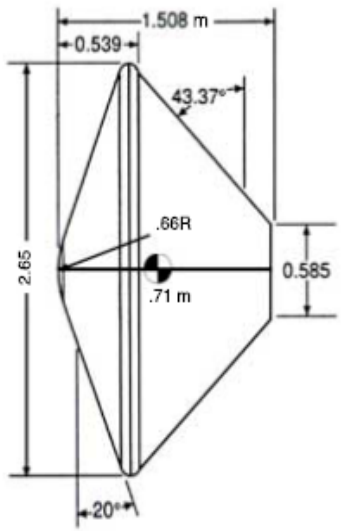

Pathfinder

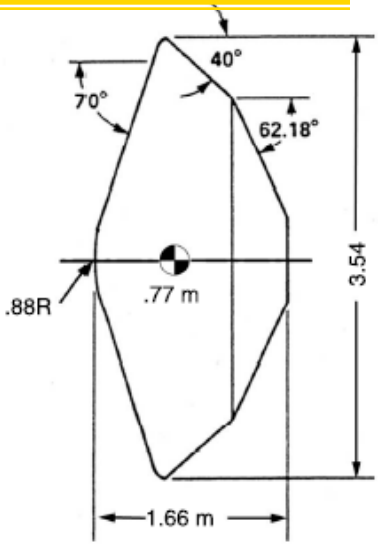

Viking Lander I and II

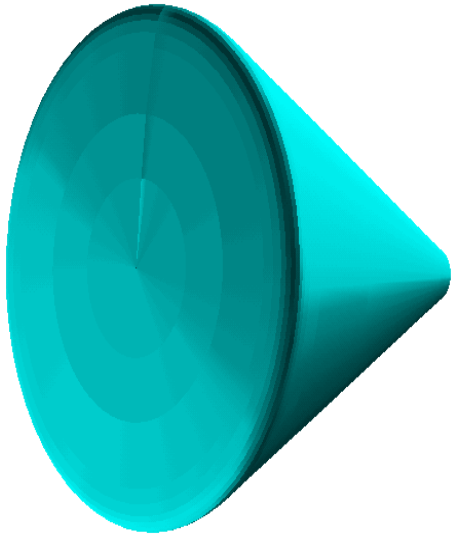

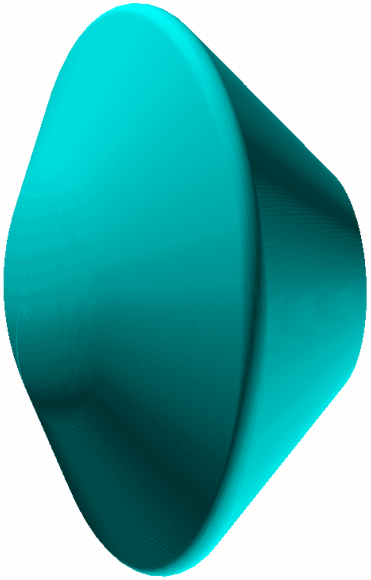

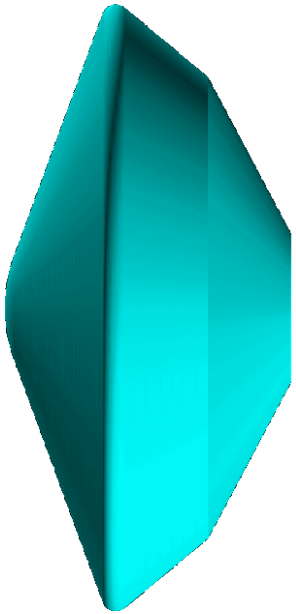

SPARTA Flow Solver and DPLR GUI

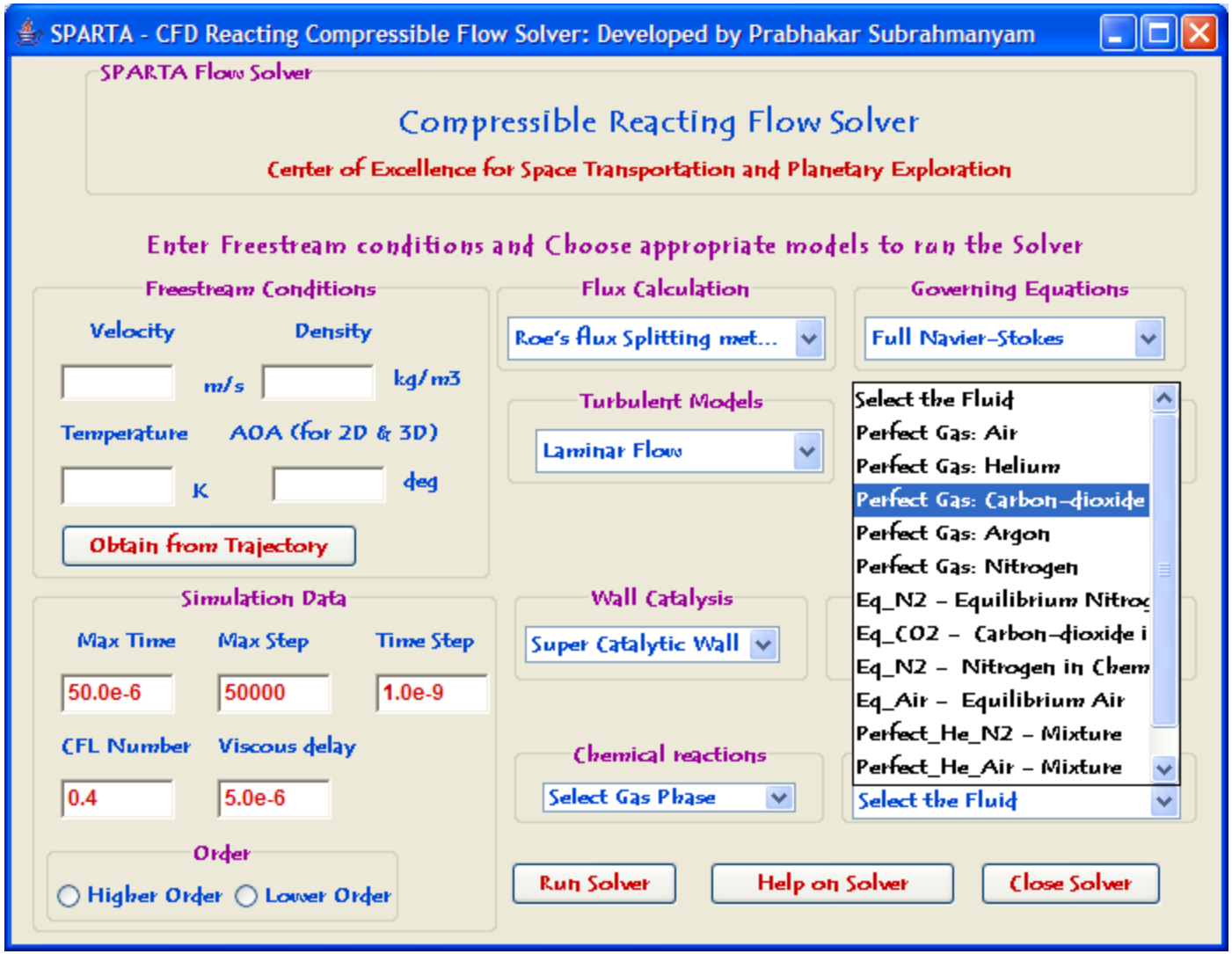

Next Mission to MARS - MARS Science Lander

MARS Atmospheric Entry Trajectory Comparison

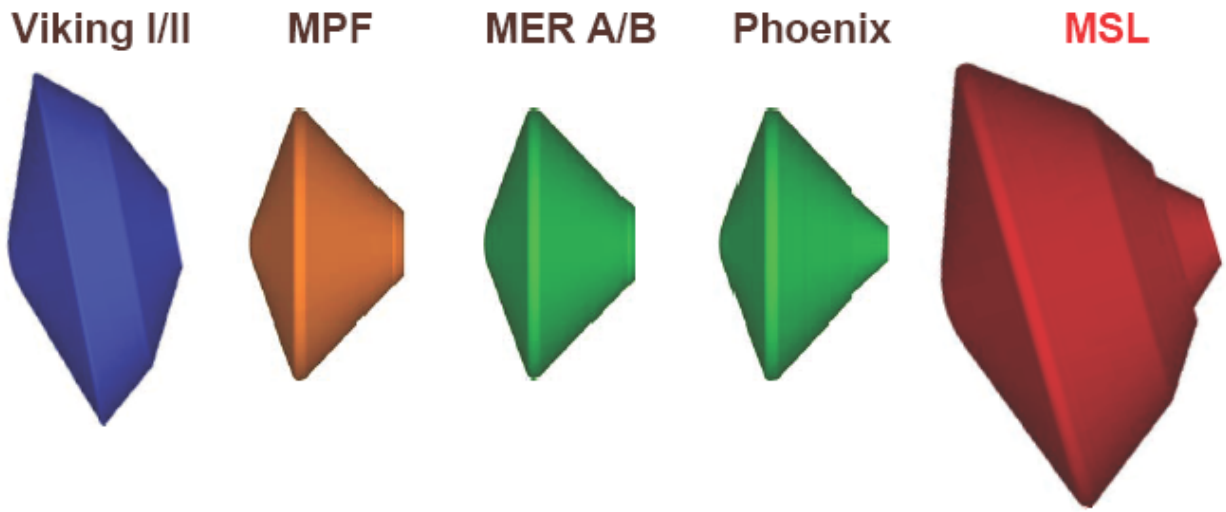

Comparison of MARS]
Trajectories as calculated by Sparta

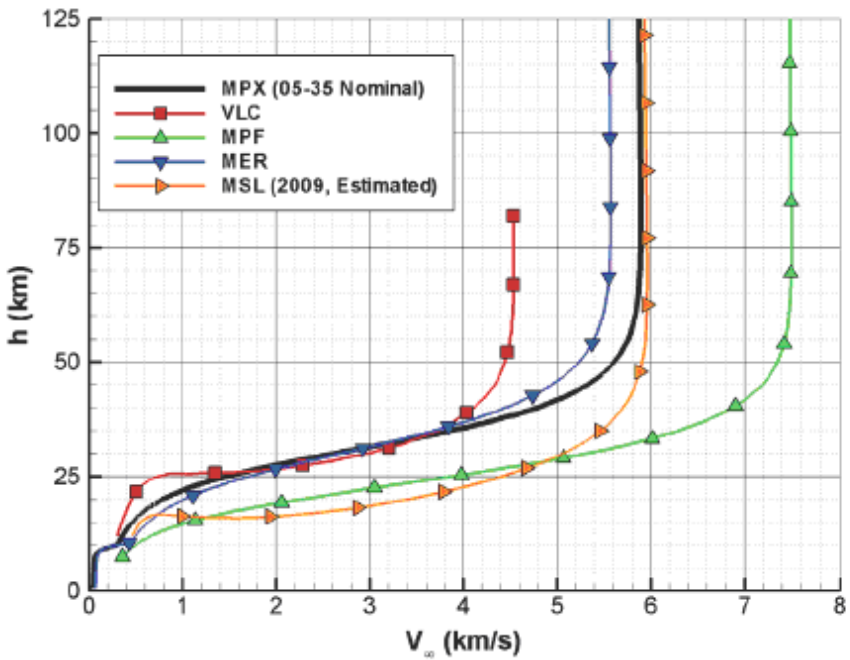

Parameter	Viking	MPF	MER	Phoenix	MSL
Entry Mass (kg)	980	585	836	603	3257
Landed Mass (kg)	612	370	539	364	850
Mobile Mass (kg)	0	11	173	0	850
Aeroshell Diameter (m)	3.5	2.65	2.65	2.65	4.5

MSL Trajectory Peak Convective Heating *Sparta* Simulation

Plots show 12 points on the nominal trajectory on which DPLR solutions were obtained.

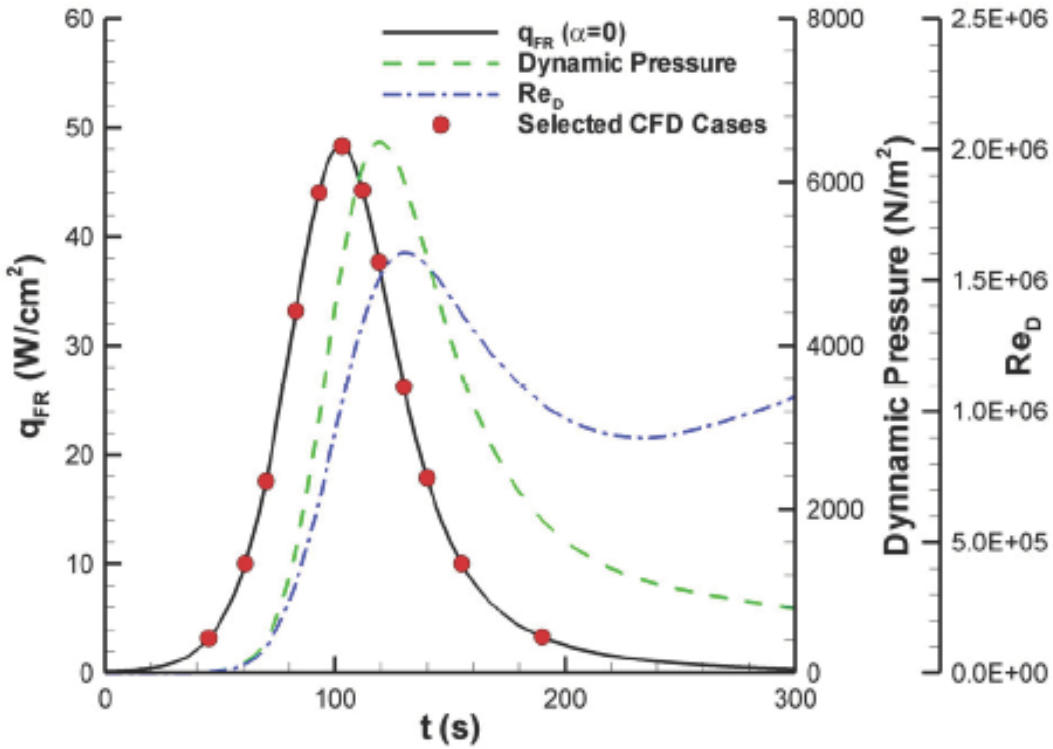

MARS Entry Trajectory as calculated by *Sparta* *Maximum Values*

AOA	Time (secs)	Velocity at Peak heating (km/s)	Altitude at Peak heating (km)	Maximum Deceleration [g's]	Convective Heat Flux (W/Cm^2)
0 °	103 s	4.92 (km/sec)	23.58 km	11.80 G	65.44 W/cm^2

Planetary Vehicle Web Application Architecture

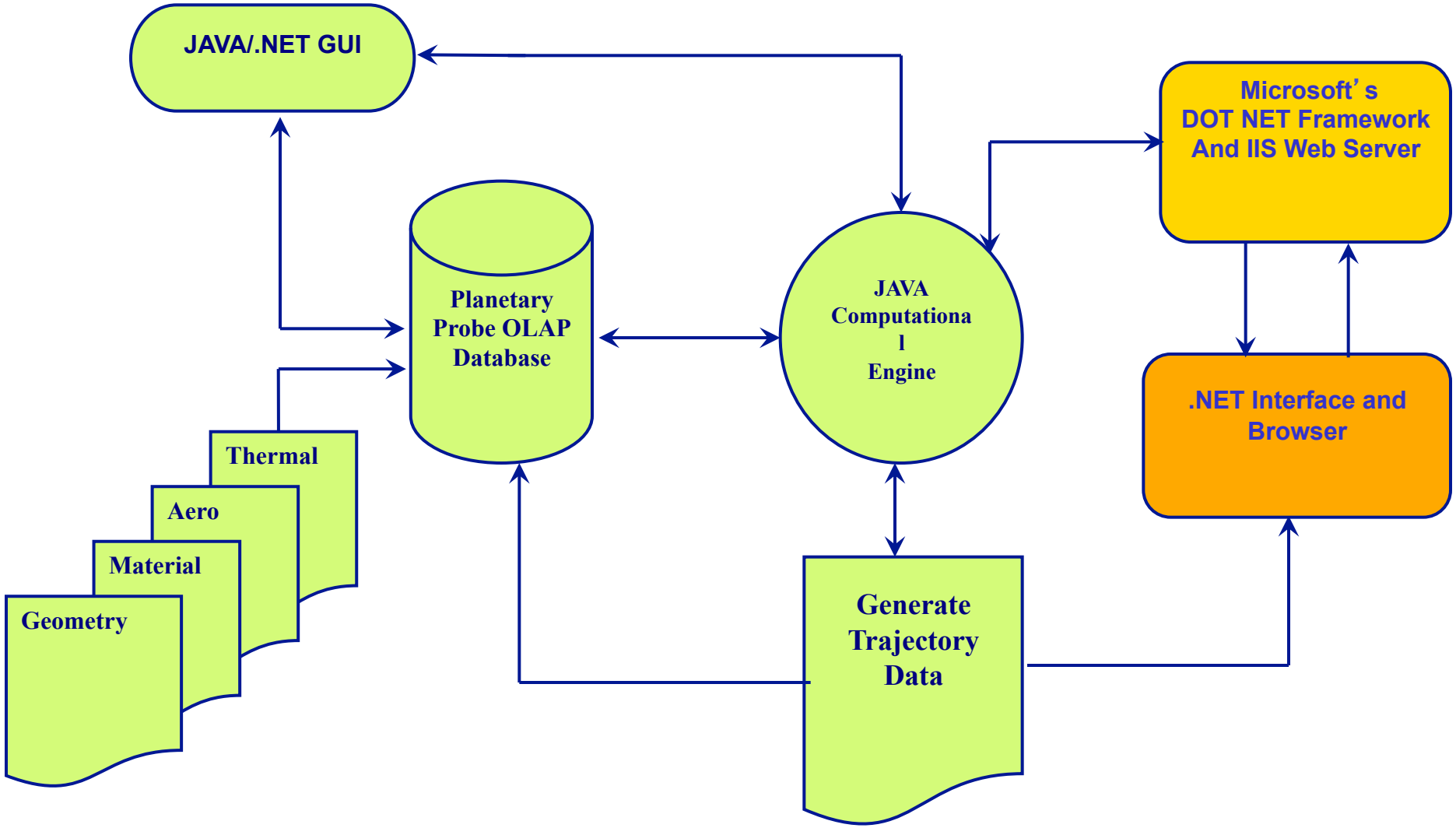

Conclusions and Summary

- A database driven, Parallel Java based trajectory Solver has been developed to have minimal user intervention.
- A novel parallel methodology by using internal Java threads has been implemented for parallel processing instead of the traditional MPI /OMP/ PVM PP schemes.
- An innovative approach for generating large trajectory datasets using OLAP Multi-dimensional databases cubes has been demonstrated. – ***Reverse Engineering.*** the best optimized trajectory and it's corresponding atmospheric entry conditions and design parameters from the huge terabytes of trajectory data.
- A dynamic Trajectory code with automatic Grid generating capabilities, aerodynamic solver and a comprehensive OLAP Database of existing Planetary prove designs has been developed and integrated with the GUI based trajectory tool.
- Code has been extensively benchmarked against NASA codes and actual flight data.
- Platform Independent (Windows, Linux, Unix etc...) : A robust, reliable and stable product, easy to use, GUI based has been developed and demonstrated.
- DOT NET Web based architecture – Aerothermal analysis for geographically dispersed group.

In the Future …

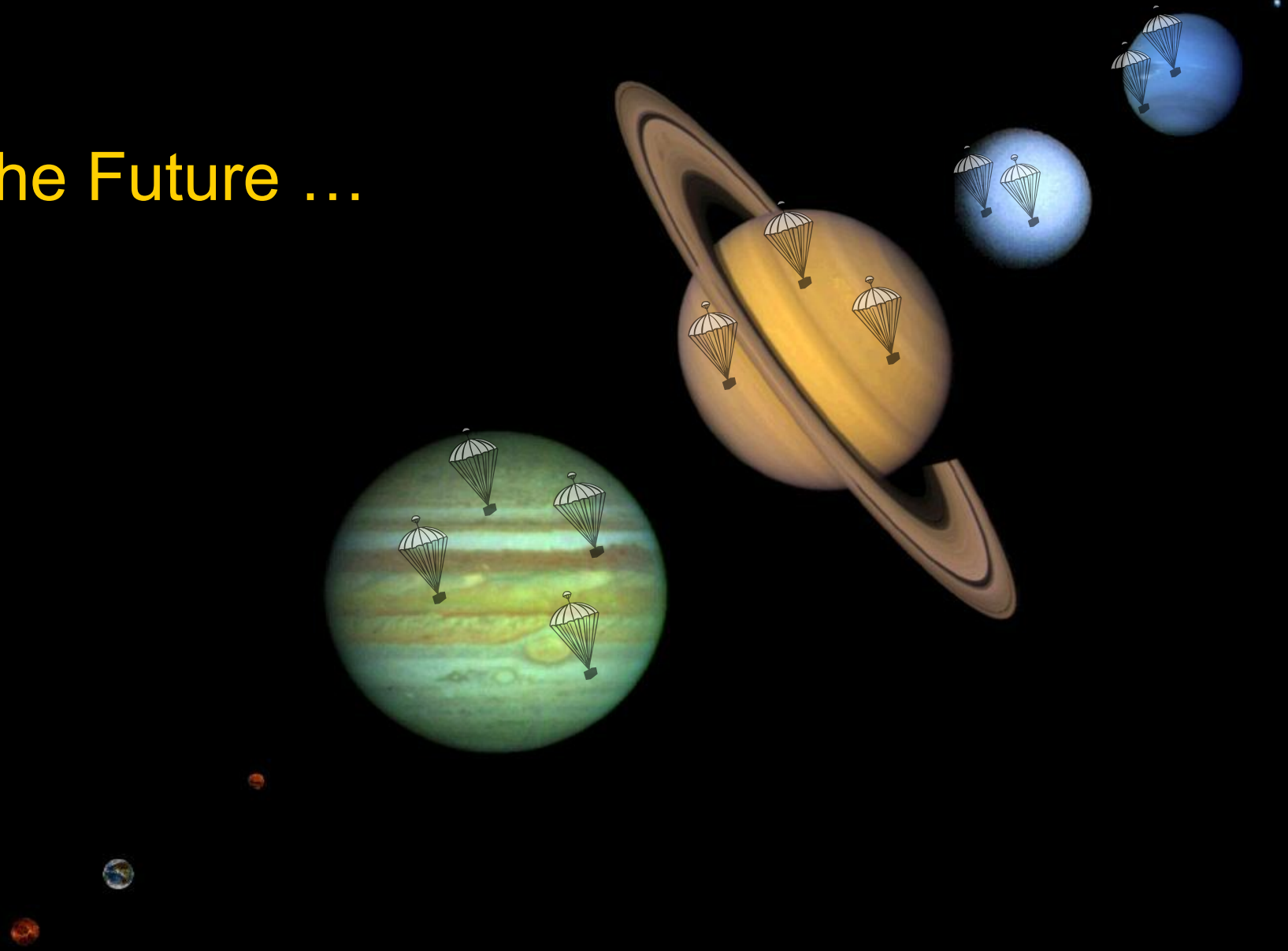

Acknowledgments

- Dr. Periklis Papadopoulos – Advisor/Professor SJSU
  - Guided the research and provided many helpful suggestions.
- Aleta Duvall of Marshall Space Flight Center – Alabama,
  - Was very kind and Provided the GRAM Models
- Sanjeev Gupta – Intel Corporation, Santa Clara
  - Discussions on .NET Framework and help with Flight Vehicle Database schema creation and discussions on OLAP
- Dr. Mike Wright – NASA ARC for providing code and support to get DPLR up and running in SJSU.
- Intel Corporation for donating several Servers for Parallel Processing capability to MAE - San Jose State University

DOTNET UI Demo

http://localhost/Probes/Probes.aspx
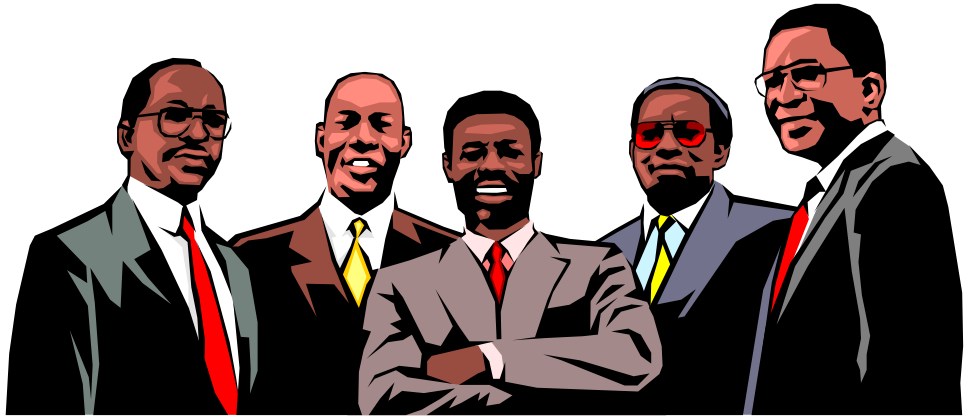
Question and Answers