THE LIFE MARKER CHIP (LMC) ONBOARD THE EXOMARS ROVER
4th Interplanetary Probe Workshop, 27 June – 30 June, 2006, Pasadena, California, USA

Erik Laan [(1)], Henk Leeuwis [(2)], Inge Loes ten Kate [(3)], Eric Boom[(1)]

[(1)]Dutch Space, Newtonweg 1, 2333 CP, Leiden, the Netherlands, Email:e.laan@dutchspace.nl, e.boom@dutchspace.nl
[(2)] LioniX, PO Box 456, 7500 AH, Enschede, the Netherlands, Email: h.leeuwis@lionixbv.nl
[(3)]Astrobiology Group, Leiden Institute of Chemistry, Leiden University, Einsteinweg 55, 2300 RA Leiden, The Netherlands, Email: tenkate@strw.leidenuniv.nl

ABSTRACT
The Life Marker Chip (LMC) on board the ExoMars rover is one of the key instruments to detect signs of past and/present life on Mars. The ExoMars mission is currently planned for launch in 2011 and will land its rover in 2013, which will be capable to acquire a sample of Martian subsurface soil at a depth of 2 mtr.

The LMC instrument basically consists of two parts which are the microfluidic lab-on-a-chip and the sampling processing unit which shall prepare samples for the aforementioned lab-on-a-chip

An ESA breadboard study for the microfluidic lab-on-a-chip is ongoing with English, German and US partners. (University of Leicester, University of Cranfield, Surrey Satellite Technology, QinetiQ, Open University, EADS-Astrium Stevenage, University of Kiel, Kayser-Threde, GeSim, DLR & Carnegie Institution) together with Dutch partners Dutch Space and LioniX. The University of Leiden acts as an intermediate for the Dutch scientists involved in the Life Marker Chip project.

1. THE EXOMARS MISSION
[1] Establishing whether life ever existed on Mars, or is still active today, is one of the great outstanding questions of our time. It is also a prerequisite to prepare for future human exploration of the red planet. To address this important objective, ESA plans to launch the ExoMars mission in 2011 (with arrival at Mars in 2013).

ExoMars will deploy two science elements on the Martian surface: a rover and a small, fixed package. The Rover will search for signs of past and present life on Mars, and characterise the water and geochemical environment with depth by collecting and analysing subsurface samples. The fixed package, the Geophysics/Environment Package (GEP), will measure planetary geophysics parameters important for understanding Mars's evolution and habitability, identify possible surface hazards to future human missions, and study the environment. Figure 1 shows an artist concept of the ExoMars rover.

Figure 1: Artist concept of the ExoMars rover as it drills into the Martian subsurface, on the search for signs of extant and/or extinct life. (artist concept: courtesy ESA)

2. THE LIFE MARKER CHIP – SCIENCE BACKGROUND
To understand the presence and evolution of organics within the Solar System and their modification by local environments and by life (if present) on suitable targets (e.g. on Mars and perhaps Jupiter's moon Europa) requires the

availability of in situ detection and characterisation of organic molecules. A new detection method for planetary exploration application is provided by immunodiagnostics found widely in the medical and biotechnology sectors and becoming established in the environmental sector for the detection of trace levels of organic pollutants. Such methods exploit the highly specific recognition and binding properties of molecular receptors such as antibodies (i.e. proteins) or fragments of them, and / or wholly artificial receptors such as molecular imprinted polymers [2].

The context for the detection of organics on Mars is complex. A simplistic view is that a significant organics inventory may have been delivered to early Mars from the solar nebula during the formation of Mars and the subsequent heavy bombardment phase. Additionally, organics have continued to arrive on the Martian surface up to the present day via cometary, meteorite and especially micrometeorite delivery. It can therefore be assumed that the organics inventory will have initially been similar to the organics found in representative meteorites present on Earth. The geological and climatic evolution of Mars will have modified the initial inventory by thermal, aqueous and other processes. Additionally, if life has been present on Mars, further modification of the inventory by biological processes will have occurred. It should however be noted that organic matter has yet to be detected in situ on Mars.

Current organic molecules related to life can be divided in 2 groups. Firstly, the so-called geomolecules, remnants of extinct life. In general, these molecules have lost their active groups and can be solved in organic solvents. Secondly, biomolecules, representatives of current life. In general, these molecules still have their active groups and can be solved in polar/acquaous solutions.

A typical example of a geomolecule is the hopane group. 2-methyl hopane has been found in 2.7 billion year old sediments [3]. Many bacteria are known to synthesize (bio)hopanoids as membrane stabilizing components. Other examples of molecules of interest for the LMC are pigment derivatives such as porphyrins and isoprenoids.

3. THE LIFE MARKER CHIP – THE INSTRUMENT

The design aim of the LMC is to detect ~20-25 specific molecules/classes on ~20-50 samples within the constraints set by mission resources and instrument design. The samples will be provided as crushed rock or regolith with a mass smaller or equal to 1 gram with particle sizes upto tens of microns. A sample processing system will extract the organic molecules (if any are present) from (within) the sample, concentrate them and provide them to the microfluidic chip part of the Life Marker Chip. The molecules will be measured via multiple single-use multiplexed immuno-assays. Each assay will perform ~100 simultaneous measurements (via a 100 spot micro-array) detecting molecules down to the level of parts per billion – assuming appropriate antibodies. To allow for controls (both positive and negative), redundancy/replicates etc. it is foreseen that ~20-25 target molecules can be simultaneously detected in any one assay/sample.

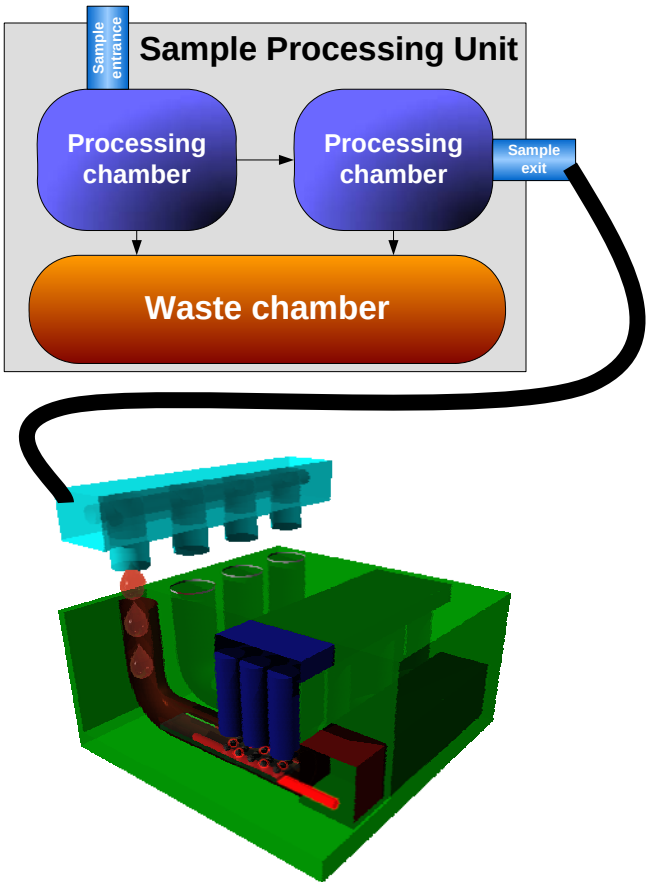

Figure 2: High level concept of the Life Marker Chip instrument. The top of the figure shows the Sample Preparation Unit. The bottom of the figure shows the microfluidic chip.

A list of 63 potential target molecules was derived using a team of consultants during a Biomarker workshop which was chaired by Prof. John Parnell of the University of Aberdeen and was held at the Space Research Centre, Department of Physics and Astronomy, University of Leicester in the UK from 24th - 26th May 2006.

Target molecules included those associated with pre-biotic chemistry, meteoritic and cometary impacts/infall, past life, present life and potential spacecraft contamination.

The targets are a mix of specific molecules and generic compound classes, in some cases with overlap both within the LMC and within the detection targets of the broader organics suite of instruments within the Pasteur instrument payload. This should allow flexibility in LMC assay design, antibody production and instrument design. The level of information obtained from the LMC will stem not from detection of a single compound, but from the detailed distribution of compounds, detected and not detected. The molecular targets have to a certain extent been selected with the other ExoMars instruments in mind to allow the "confirmatory and complementary" analysis process proposed for the Exomars organics package to be used.

4. TESTING CRITICAL TECHNOLOGIES – THE OPTICAL CHIP DEMONSTRATOR

One of the critical issues in the Life Marker Chip is the coupling of light into the biomarkers. This was already envisioned early in the conceptualisation of the Life Marker Chip and therefor Dutch Space & LioniX started a national technology development study in the summer of 2005 concerning an Optical Chip Demonstrator, managed by the Dutch Aerospace Agency NIVR. This chip basically contains a number of solutions of distributing light in a waveguide where the so-called evanescent wave field (external to the waveguide) is available for excitation of fluorophores bound to biomarker dots. Figure 3 shows the set-up that was built to test the OCD chips.

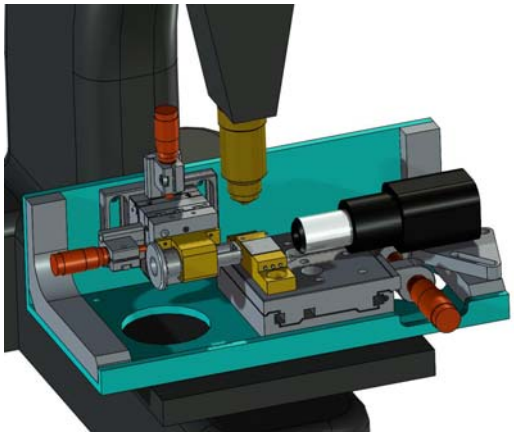

Figure 3: set-up to test the Optical Demonstrator Chip (OCD)

The set-up is built onto a microscope mounting. On the left, light can be coupled in, into a chip. This is performed with 2 microstages, able to position the light source within a micrometer in 2 directions. On the right, there is a camera measuring the output of the chip. The position of this camera can be set within 0.5 micrometer in the lateral direction. Then, for fluorescence measurements, the microscope is suited with an emission filter and a camera to make images of the fluorescence field.

One of the main test objectives is to validate a radiometric throughput model of the Optical Demonstror Chip.

5. CONCLUDING REMARKS

The Life Marker Chip (LMC) on board the ExoMars rover is one of the key instruments to detect signs of past and/present life from samples taken down to a depth of 2 mtr below the Martian surface. The ExoMars mission is currently planned for launch in 2011 and land its rover in 2013. Technology development is running to produce an operational breadboard of the instrument within an ESA contract by the end of 2007.

6. REFERENCES

1. The Aurora programme, Europe's Framework for Space Exploration, ESA Bulletin, number 126, May 2006

2. Sims, M.R., Cullen, D.C., Bannister, N.P., Grant, W.D., Henry, O., Jones, R., McKnight, D., Thompson, D.P., and Wilson, P.K., The Specific Molecular identification of Life Experiment (SMILE), 2005, Planetary and Space Science, 53, 781-791

3. J. J. Brocks, G. A. Logan, R. Buick, and R. E. Summons, Science, vol. 285, pp. 1033-6., 1999.