# Technology Developments for Atmospheric Entry Systems

**Robert Dillman,**
**NASA Langley Research Center,**
**June 28, 2005**
*Email: Robert.A.Dillman@nasa.gov*

3rd International Planetary Probe Workshop,
27 June – 1 July 2005, Anavyssos, Attica, Greece

# OUTLINE

- Descent and Landing Without a Parachute
- Crushable Energy Absorbers
- Inflatable Vehicles
- Custom Geometries
- Higher Temperature Materials
- Conclusions
- Questions

# Descent and Landing Without a Parachute

- Deletes some requirements:
  - No parachute deploy conditions during descent
  - No need to pack parachute into small probe
- Adds some others:
  - Payloads must tolerate high landing G's
    - Sample return: rock/regolith in sealed container
    - Hardened electronics, as in Mars Microprobe
  - Ballistic coefficient must be sized for survivable terminal velocity, in addition to entry heating

$$V_{term} = (2\,\beta\,g\,/\,\rho)^{1/2}$$

  - Soft landing surface preferable (water/sand/soil/clay)
  - Must still achieve stability without parachute
- Benefits
  - Either more usable volume, or smaller probe
  - Eliminates failure modes of active deploy system
  - Smaller landing footprint
  - Higher landing velocity (benefit?)

Example Systems

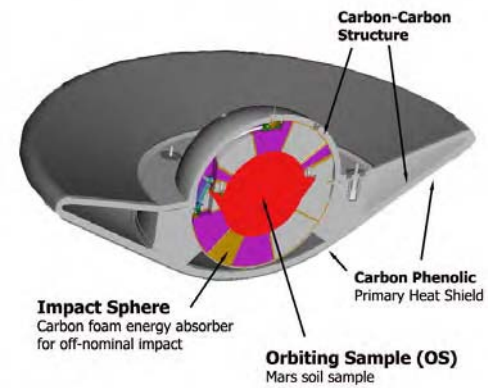


Mars Sample Return Earth Entry Vehicle
42kg, 0.900m diameter
41m/s landing, 2500 G's (soft surface)

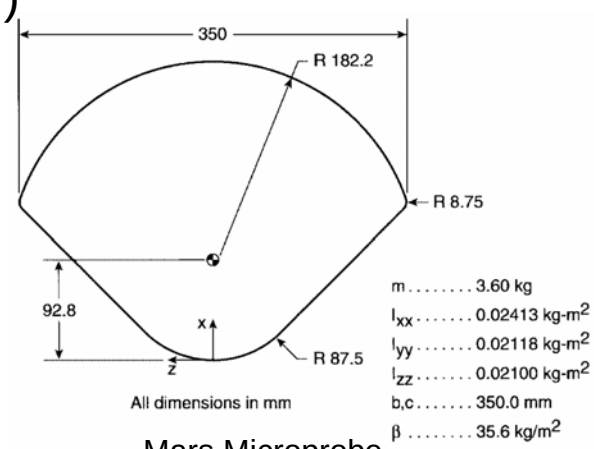


Mars Microprobe
180m/s impact, 0.3-2.0m depth

# Crushable Energy Absorbers

- Material deforms to absorb kinetic energy (landing)
  - Example: aluminum honeycomb in lander legs
  - Sized to crush under pre-determined load
  - Should resist crushing along entire crush stroke, rather than buckling and collapsing
- Stroke required depends on max deceleration allowed
  - Ideal distance = $V^2$ / (2 x decel) ← square deceleration pulse
  - Typically requires twice the ideal value (triangular pulse), or more
  - When crushed to some percent of height, material becomes solid…
- Example system: MSR EEV energy absorber
  - Containment protection in case of hard surface landings
    - Gravel road, concrete pad, etc
  - Radial design to protect against angled landing
  - Cellular design: composite cell walls, stiffened with carbon foam
  - Crush stroke of 90% of 63mm thickness
  - Decelerates 5.5kg (Mars samples, container, EEV lid & lid TPS)
    - Plus own mass, 4.8kg
  - Limits hard surface impact to <3500G's
  - Thermally insulates sample container during nominal EDL (<2500G's)

# MSR EEV Impact Testing

- Drop tests off 70m gantry at Langley Impact Dynamics Research Facility
- Sea level air 14% denser than UTTR
  - Terminal velocity 6% low
  - Kinetic energy 12% low
- Built custom bungee accelerator with tunable release velocity to allow impact testing at velocities matching predicted terminal velocity of MSR EEV
- On-board digital recorder
- Test results correlated with non-linear DYTRAN FEM

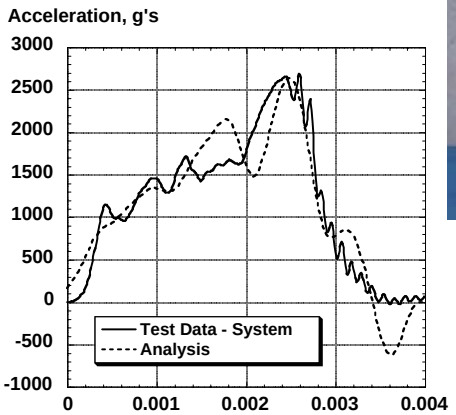


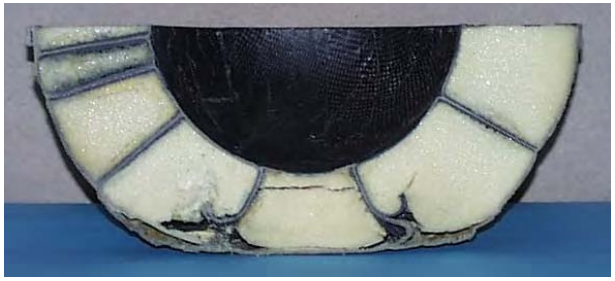

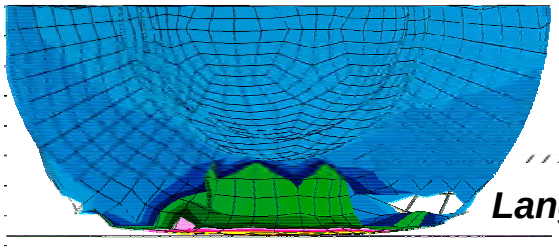

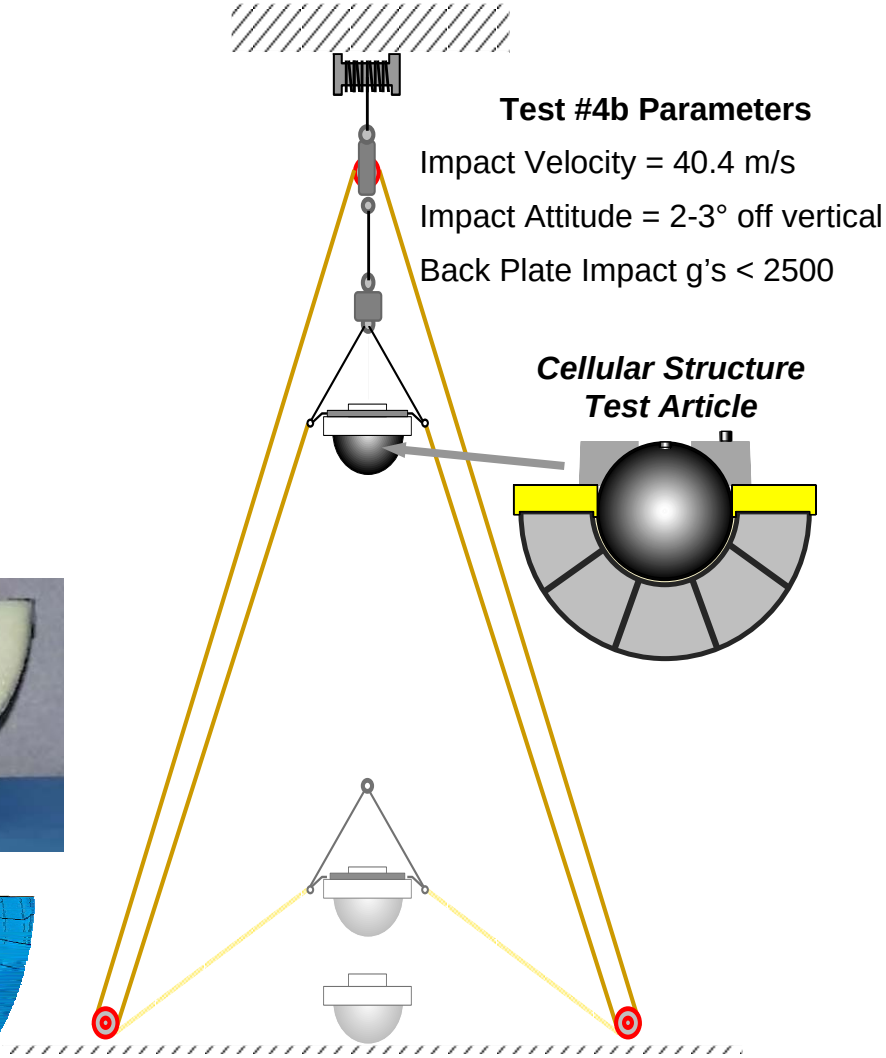

# MSR EEV Impact Test Video

- Link to IPPW3_Dillman MSR_Impact_Video.mov

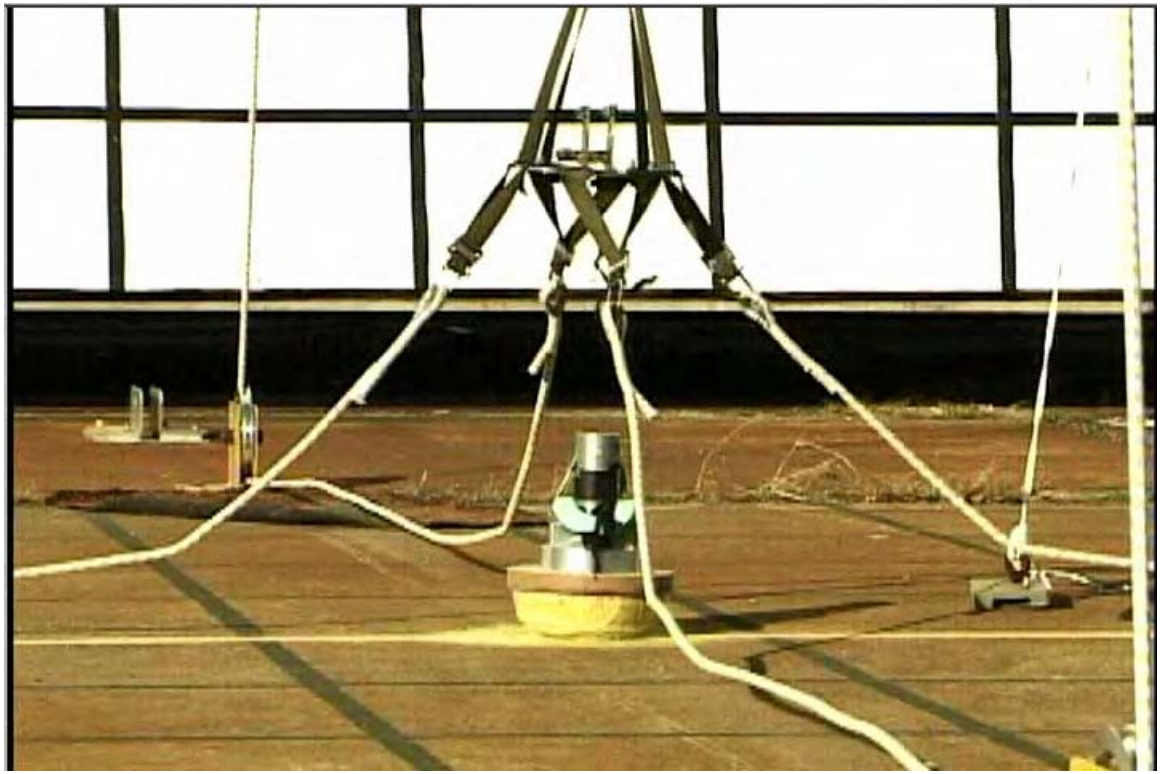

# Inflatable Vehicles

- IRVE concept:
  - Rigid TPS cap at nose
  - Attached inflatable cone of MER air bag materials
  - $N_2$ pressurization system
- Advantages over rigid aeroshell:
  - More efficient use of launch shroud for large payloads
  - More payload mass to surface for equivalent trajectory constraints
  - Access to higher altitude landing sites
  - Easier payload access on launch vehicle & in cruise
    - Need no mechanical, electrical, thermal conduits through heat shield
  - Larger drag area distributes heat flux
    - Allows use of lower temperature materials, no backshell cover
- Technical Challenges:
  - Little to no heritage (yet)
  - Inflatable structure flexibility, and susceptibility to tears & punctures
  - Must maintain inflation despite increasing atmospheric pressures through entry, descent, and possibly landing
    - Separation of payload from inflatable should be assisted by ballistic differences
    - Central payload is high mass, low area; inflatable cone is low mass, high area

# MSL-Class Inflatable Vehicle

- 4.375m usable launch shroud diameter, 2200kg entry mass
- 4.375m diameter rigid aeroshell , 86kg/m$^2$ ballistic coefficient
- 15m diameter inflatable, 8.9kg/m$^2$ ballistic coefficient

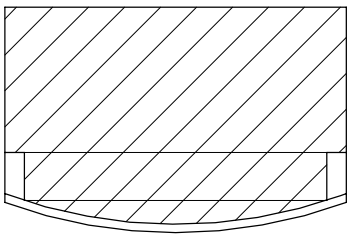

Inflatable vehicle,
launch configuration

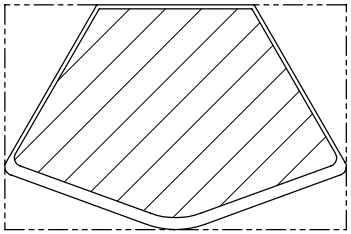

Rigid aeroshell
- Same launch shroud cylinder
- 49% less payload volume

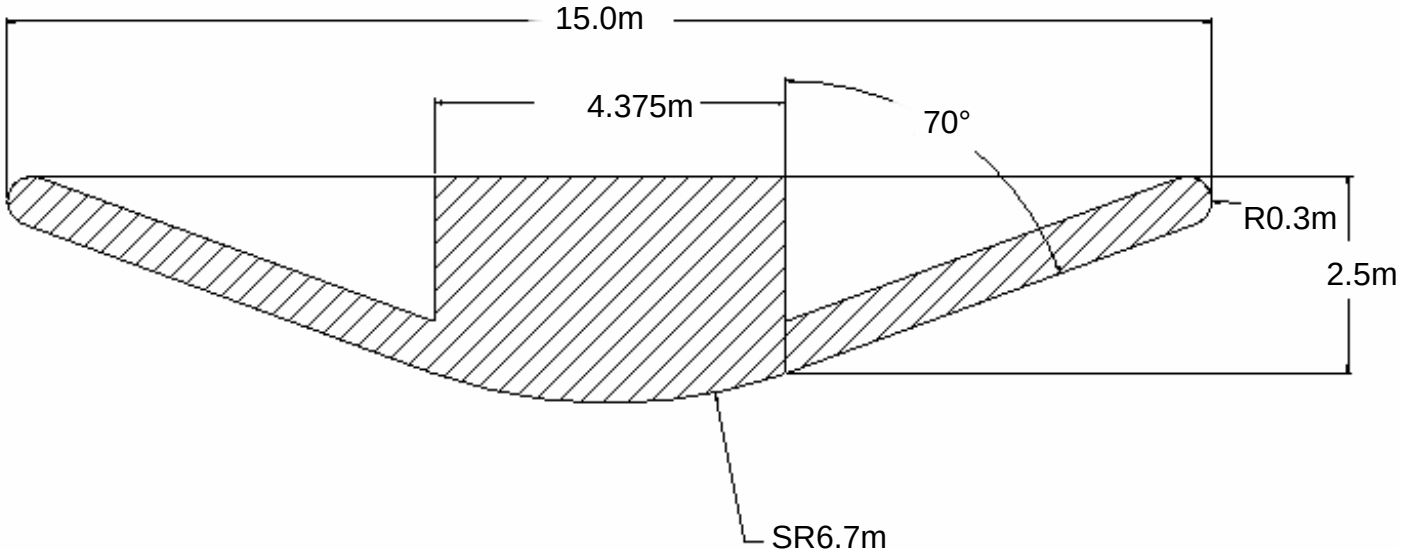

# Rigid vs. Inflatable MSL-Class Mission

Direct Ballistic Entry, 6km/s, 2200kg Entry Mass, 1.3N, 27.0 longitude landing site

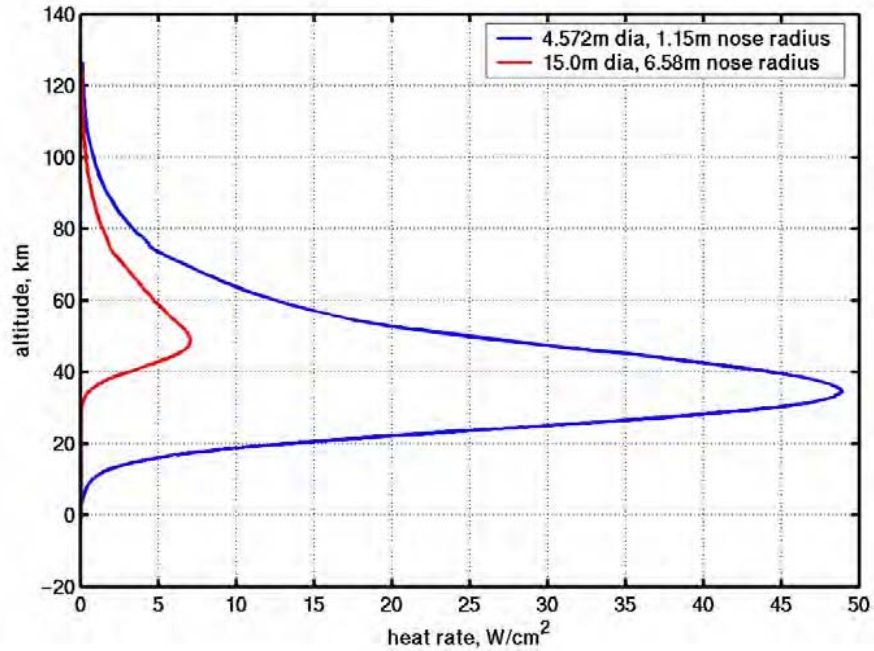

15m Inflatable 70° Sphere-Cone

4.572m Rigid 70° Sphere-Cone

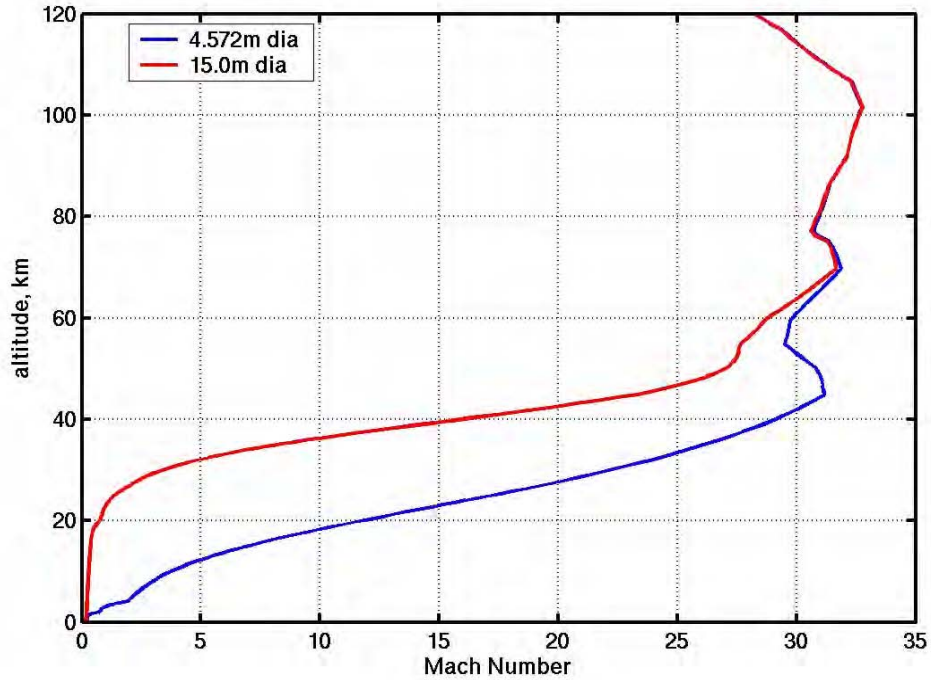

# Inflatable Reentry Vehicle Experiment

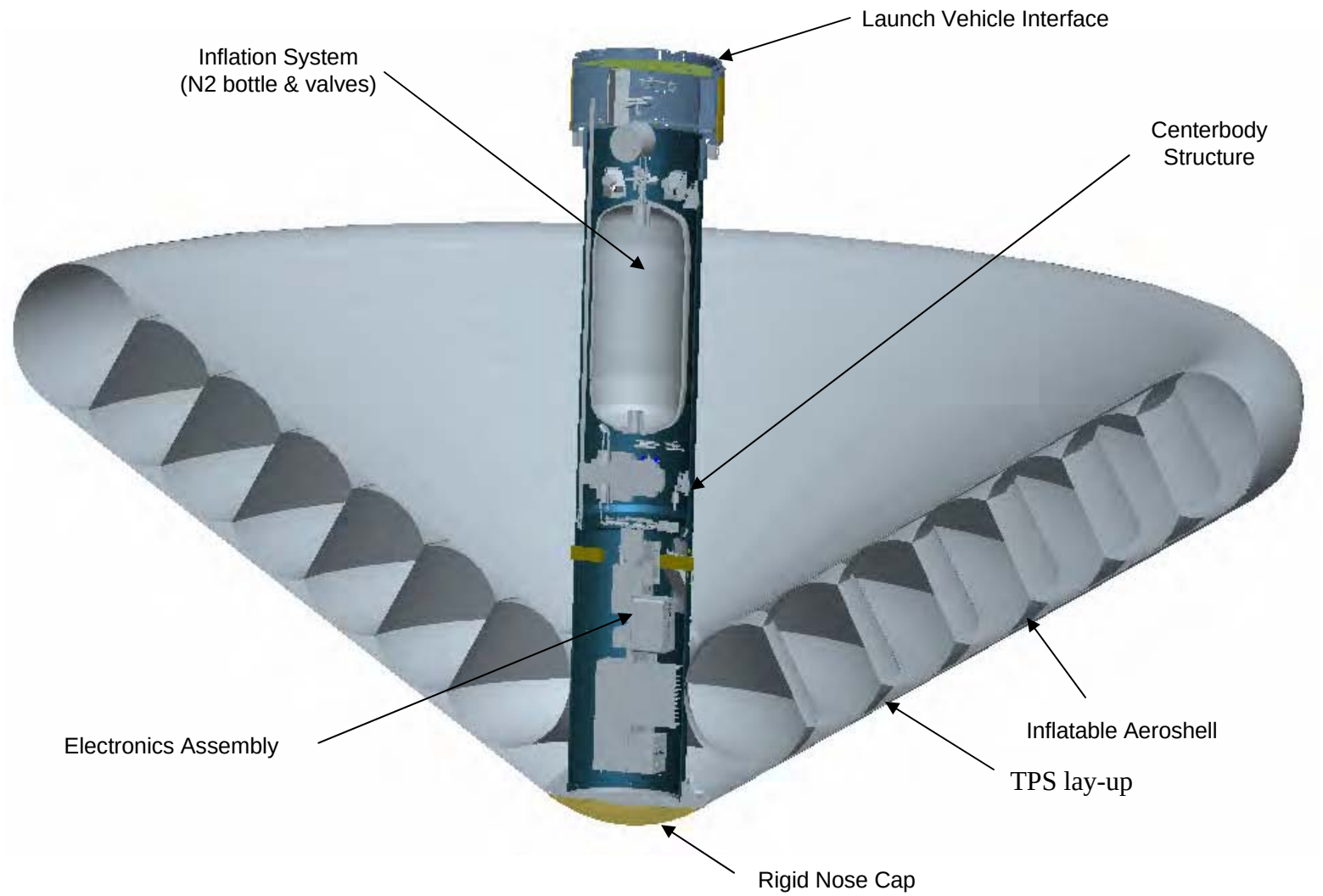

# Inflatable Reentry Vehicle Experiment

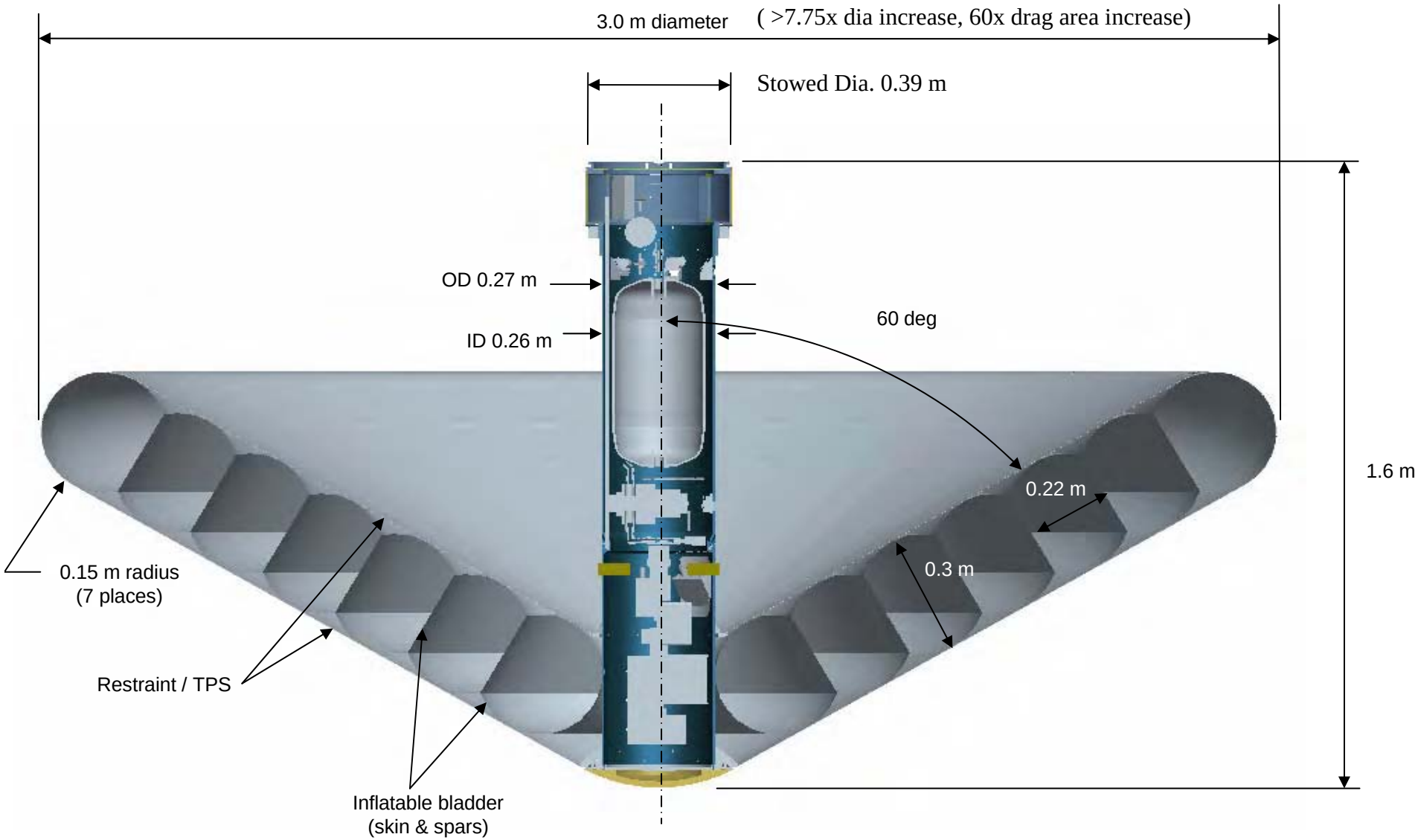

# Custom Geometries

- Can customize aftbody & forebody geometry toward the individual mission requirements
  - Typical balance of drag, heating, & stability = 70° cone at Mars
  - Microprobe used 45° cone to lower drag, increase impact speed
- Other examples
  - MSR goal of raising aftbody entry temperatures past 500°C

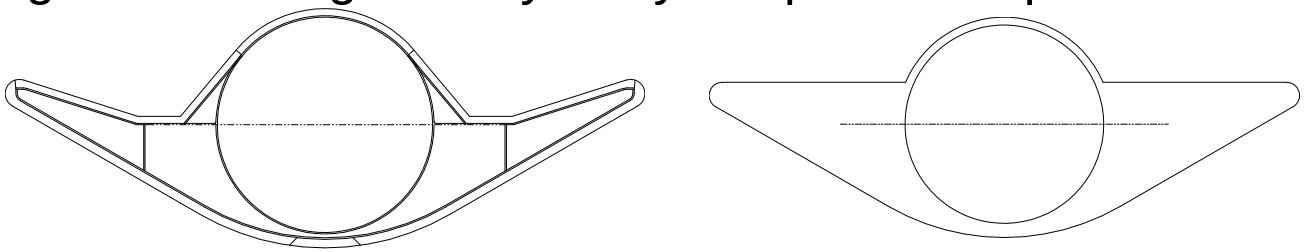

  - Asymmetric backshell features to control flow & re-orient a backwards entry capsule
  - Lifting entries – fly at angle of attack by CG offset, or asymmetric shape, or deployable tab/shelf, or…

# Higher Temperature Materials

- TPS thicknesses are typically sized to keep the structural bondline from exceeding 250°C
- Use of structural materials & adhesives with higher temperature capability should result in significant TPS mass savings
  - Raising the limit to 400°C can reduce TPS thickness 25-40%
- Vendors typically have data on their materials well beyond the quoted range
  - Adhesives RTV-560 & HT-424 list upper temperature limit as 260°C
  - Both manufacturers have strength data to 650°C
  - Shuttle specs allow single-mission use of RTV-560 to 329°C
    - Allow use to 650°C if not under load
  - Planetary entry missions are typically single-use
- Adhesives typically weaken with increasing temperature
  - Entry probes are through entry heating before the bondline heats up
  - Forebody TPS adhesives are under compressive loads during descent
- Some testing of higher temperature materials & adhesives for flight use is underway at NASA Langley, with more planned

# Conclusions

- Advances in atmospheric entry technologies offer the prospect of improved planetary probe performance.
  - Increased mission design flexibility
  - Expanded access to high altitude regions
  - Increased deliverable mass
  - Increased payload mass fraction

# Questions?