Development of an Astrobiology Penetrator and Delivery System

S. Vijendran ESA ESTEC, The Netherlands
M.C. Perkinson Astrium Limited, Stevenage, UK
T. Kennedy, R. Gowen MSSL, UK

IPPW-9

ESA UNCLASSIFIED – For Official Use

Planetary Penetrators

Mars96

Deep Space 2

Luna Glob

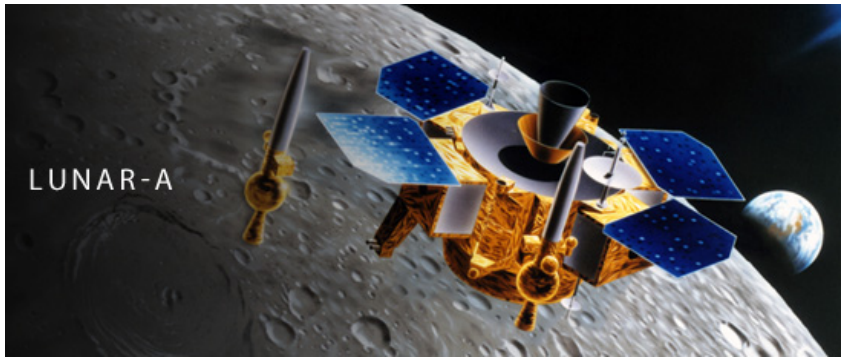

Selene II

ESA UNCLASSIFIED – For Official Use

Europan surface conditions

- Cold
- Hard
- Rough
- Radiation
- Relatively poorly understood

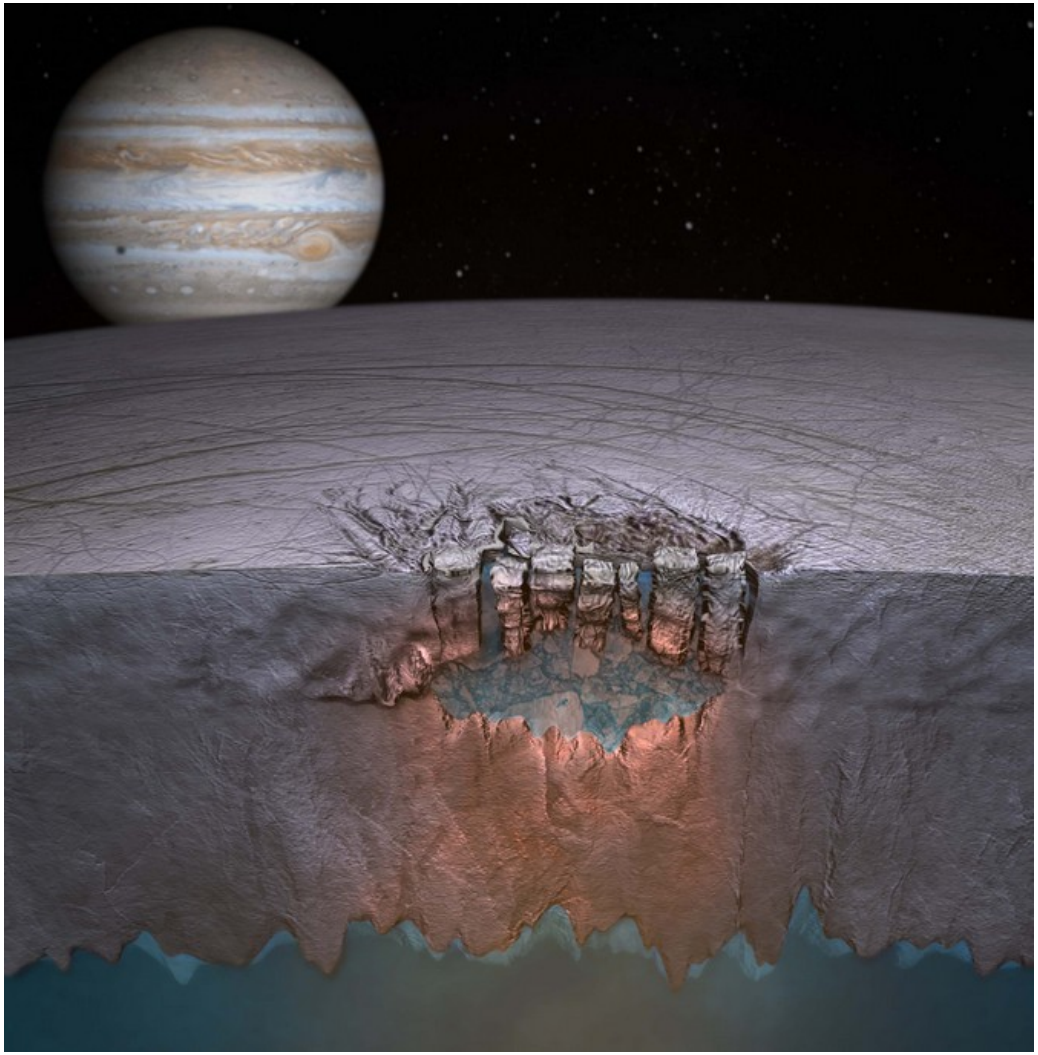

ESA UNCLASSIFIED – For Official Use

Phase 1 mission design for Europa

	PLM	De-Orbit
Ganymede	~30m/s	~2km/s
Europa	~34m/s	~1.5km/s

200km release

Manoeuvre-1
PDM lowers pericentre to 34km via small apocentre burn ~34m/s

Manoeuvre-2
Large de-orbit manoeuvre at pericentre ~1450m/s

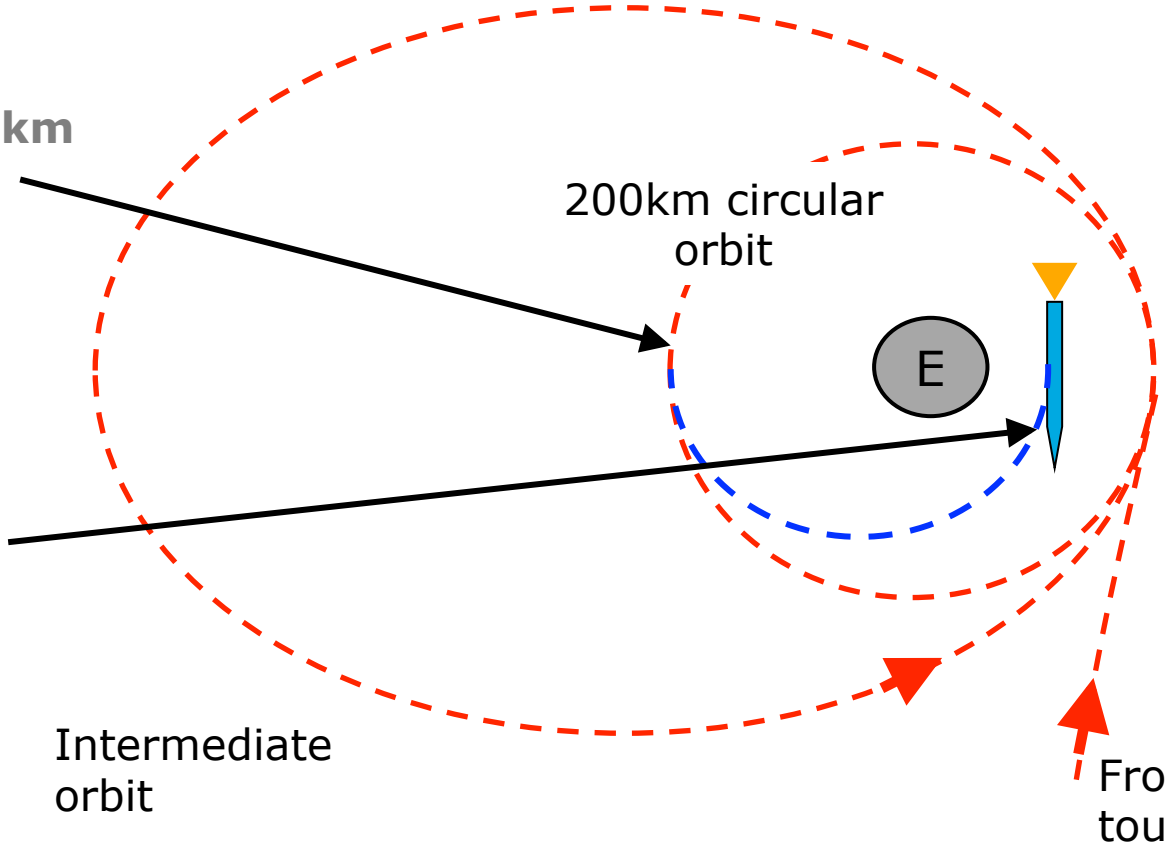

ESA UNCLASSIFIED – For Official Use

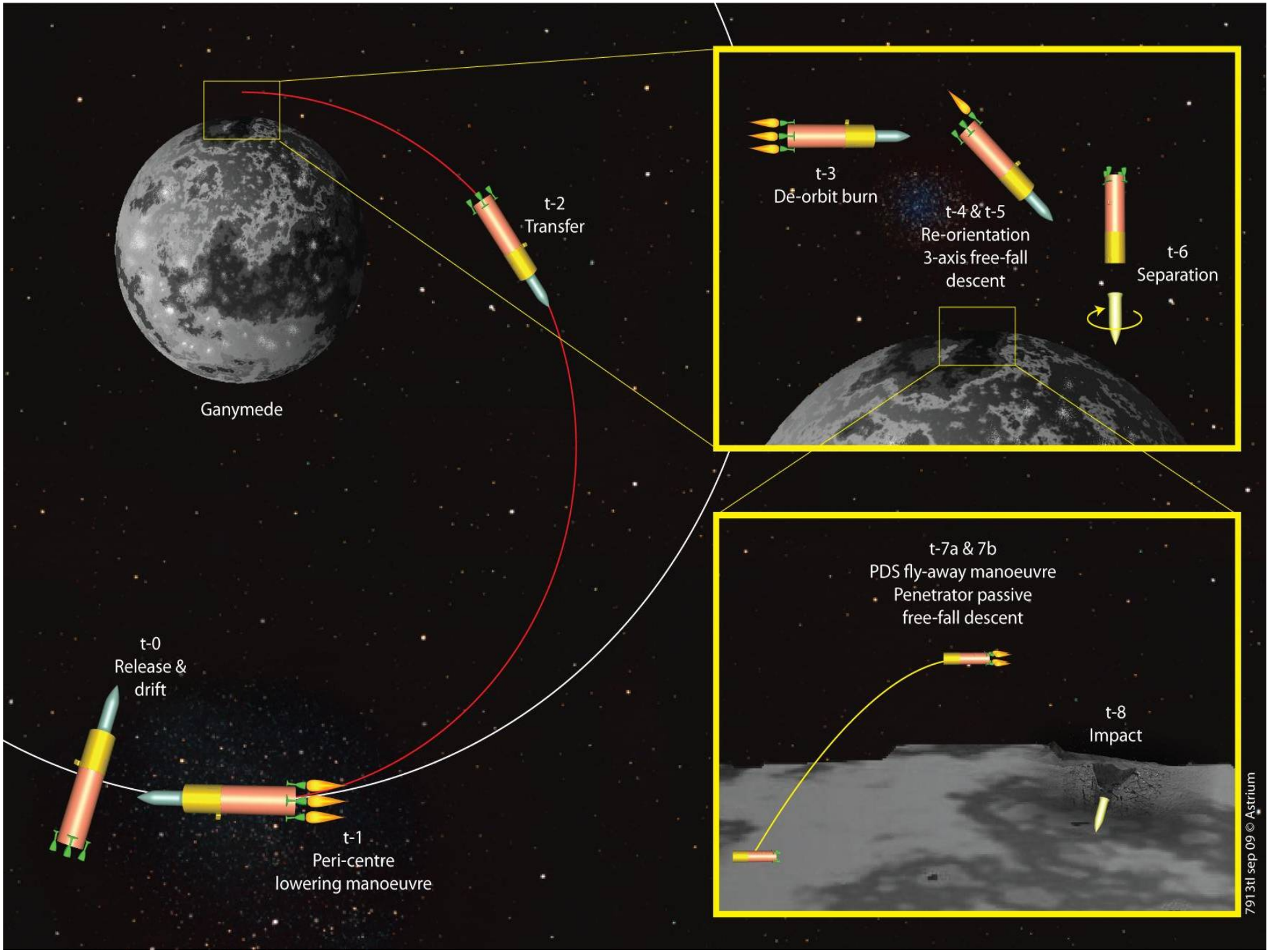
Ganymede
t-2
Transfer
t-0
Release &
drift
t-1
Peri-centre
lowering manoeuvre
t-3
De-orbit burn
t-4 & t-5
Re-orientation
3-axis free-fall
descent
t-6
Separation
t-7a & 7b
PDS fly-away manoeuvre
Penetrator passive
free-fall descent
t-8
Impact
7913tl sep 09 © Astrium

Impact modelling

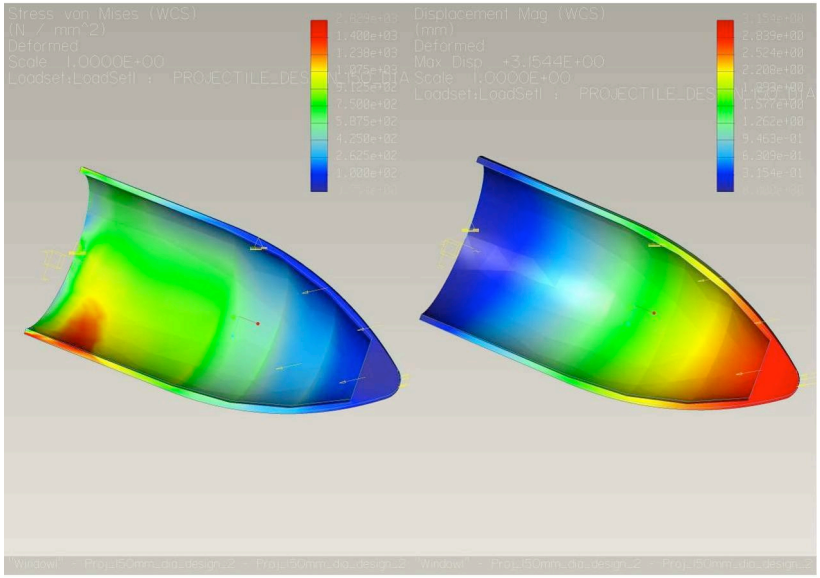

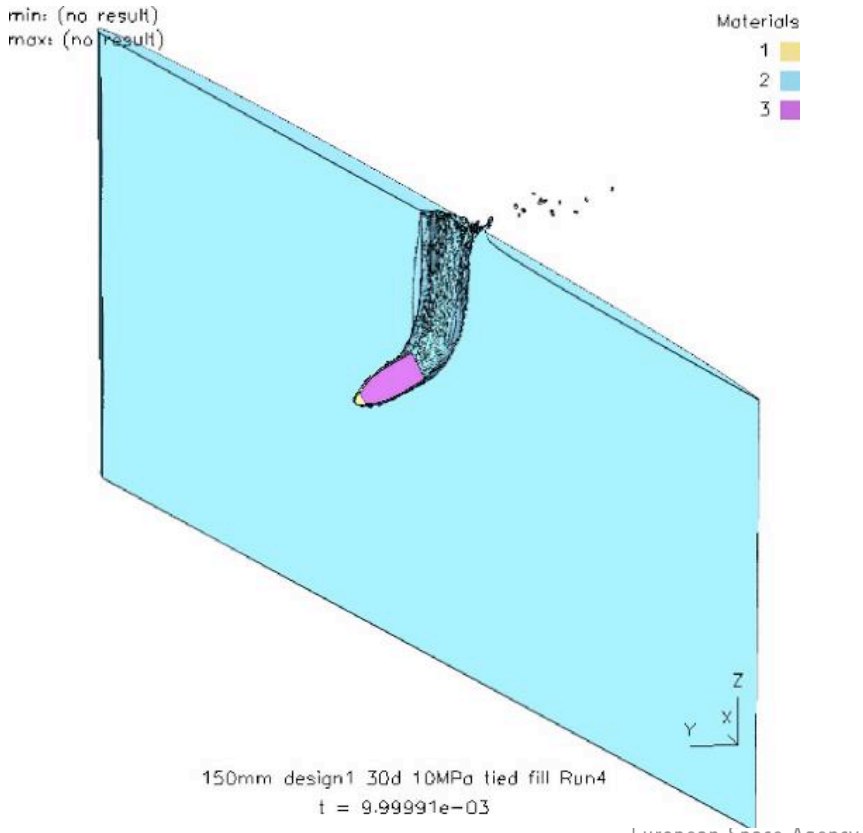

Heritage from QinetiQ UK munitions systems development

ESA UNCLASSIFIED – For Official Use

Phase 1 Penetrator for Europa

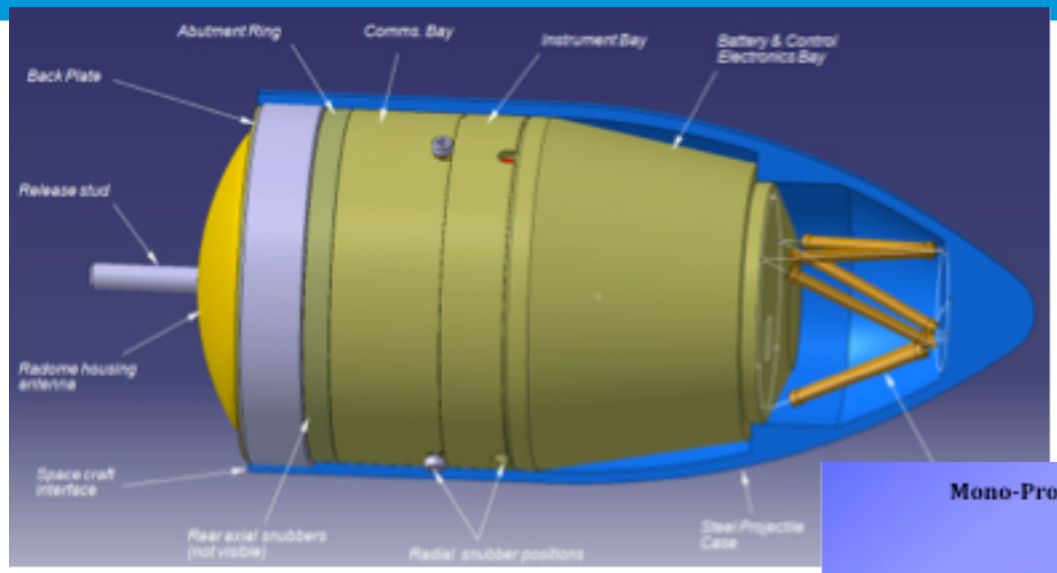

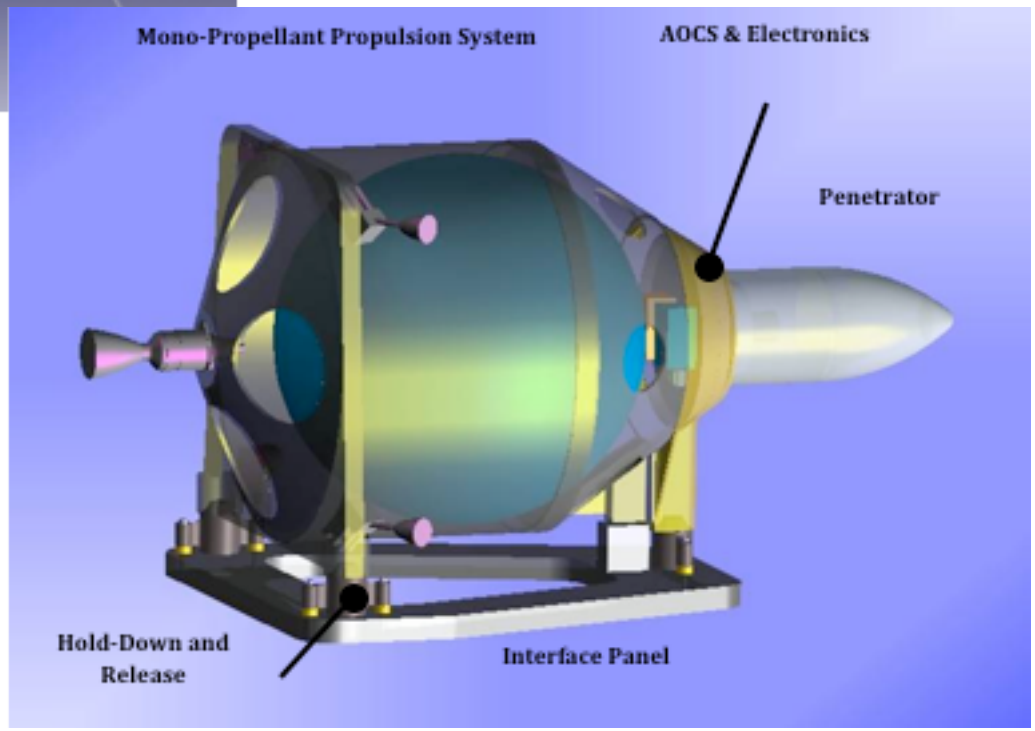

ESA UNCLASSIFIED – For Official Use

Phase 2 TDA background and driving requirements

1. 800 kEuro, 18 months, TRL4/5
2. Focus on astrobiology for Europa/Mars
3. Bottom-up approach to payload package (mass limit of 4kg incl. margins)
4. Full-scale breadboarding of shell and sample acquisition system with impact testing

ESA UNCLASSIFIED – For Official Use

Phase 2 astrobiology payload design

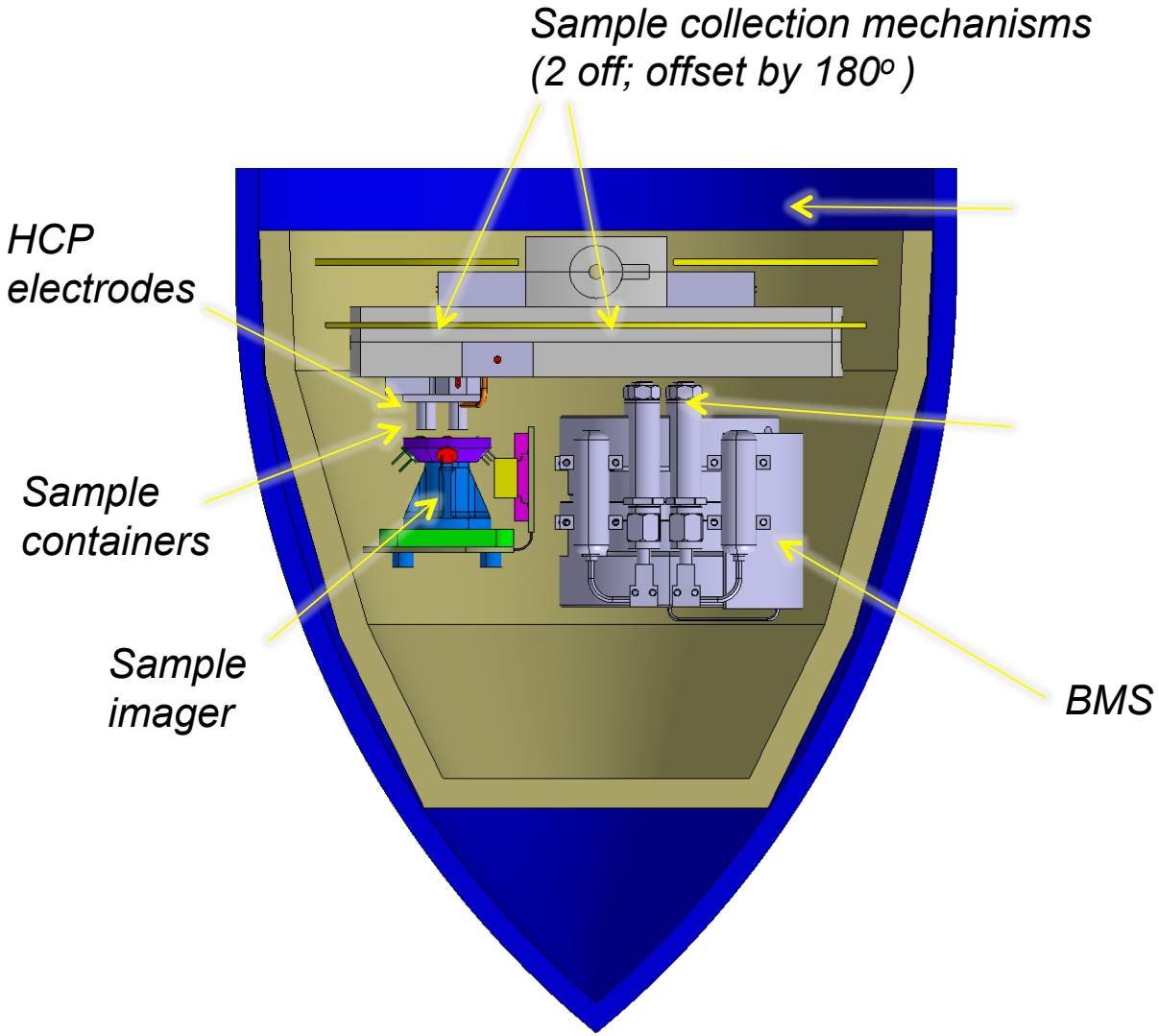

ESA UNCLASSIFIED – For Official Use

Phase 2 updated penetrator design

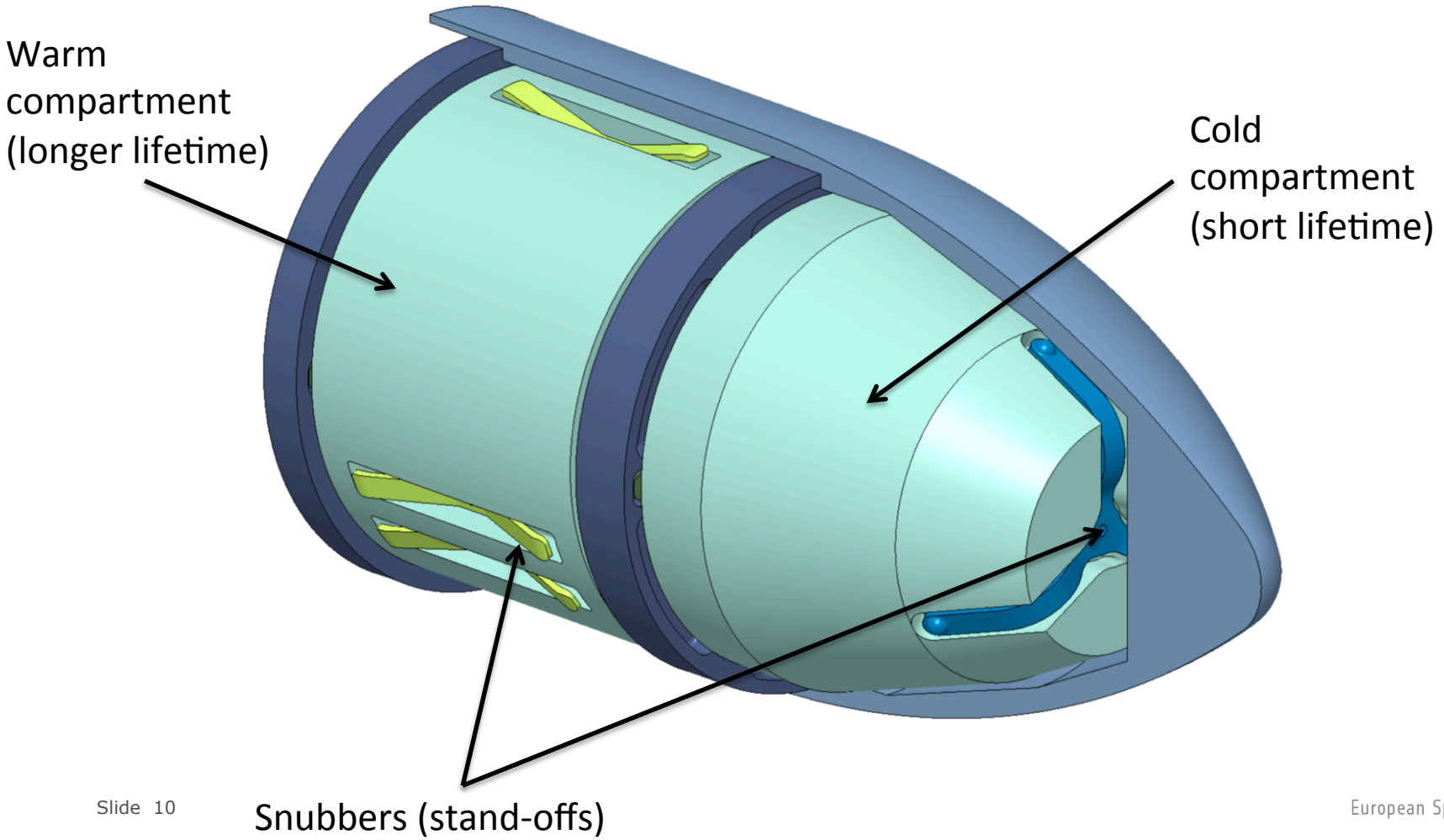

ESA UNCLASSIFIED – For Official Use

Phase 2 updated penetrator design

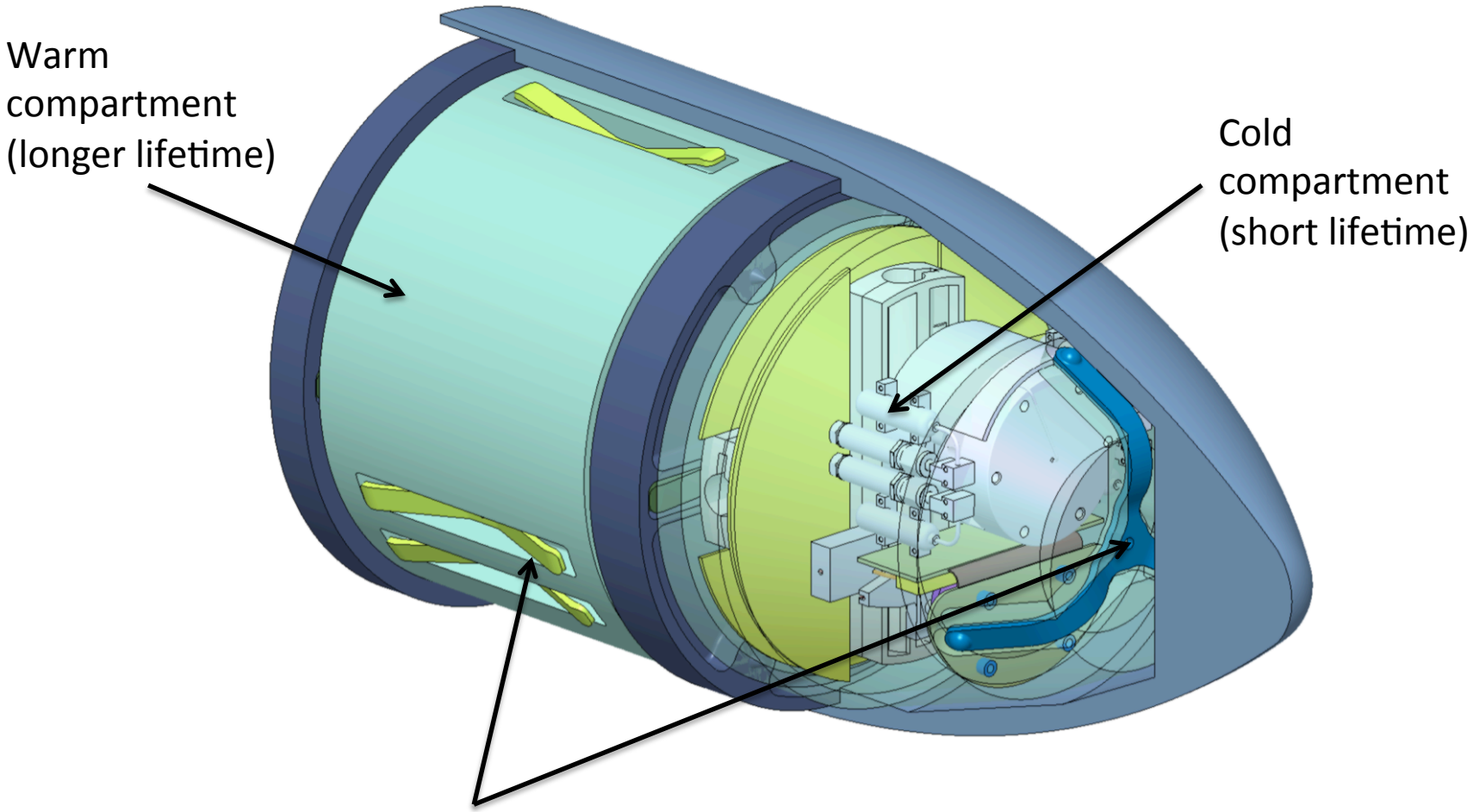

ESA UNCLASSIFIED – For Official Use

Phase 2 updated PDM mass budget

- Instruments – 4kg
- Penetrator – 20kg
- Delivery system – 110kg
- Total = 130kg

ESA UNCLASSIFIED – For Official Use

Phase 2 – next steps

1. Small scale testing
2. Impact modelling
3. Full scale breadboarding and test

ESA UNCLASSIFIED – For Official Use

Small scale testing

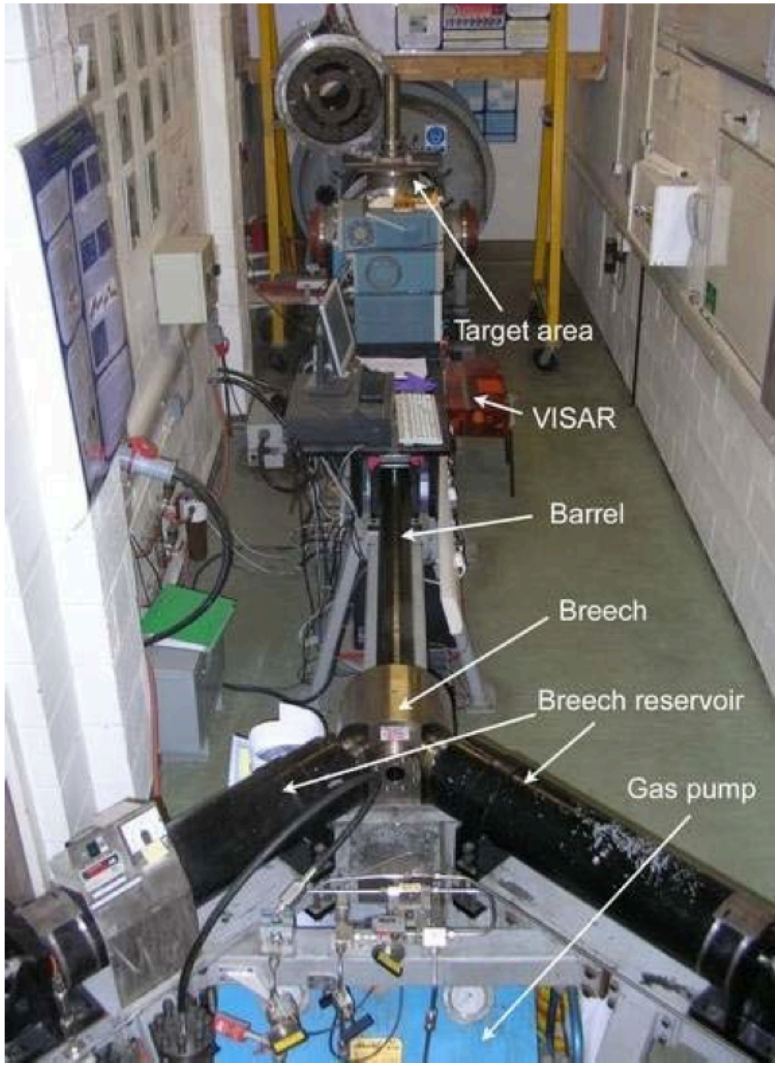

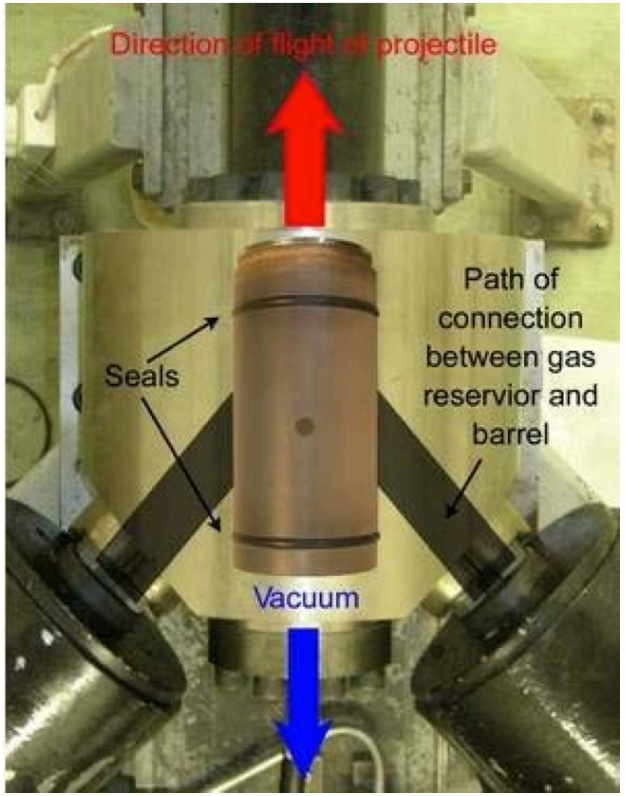

ESA UNCLASSIFIED – For Official Use

Full scale impact testing

UK Ministry of Defence – Pendine facility

ESA UNCLASSIFIED – For Official Use

Future developments

- High-g, low temperature primary battery

- Miniaturised, high-g UHF comms transceiver

ESA UNCLASSIFIED – For Official Use

Summary

- ESA Phase 2 study of Penetrators for Europa/Mars is underway
- Astrobiology package designed.
- Full-scale breadboarding and impact testing to 10's kgees planned.
- External shell and sampling mechanism to TRL4/5
- Phase 3 planned for 2013 – further subsystems to TRL5.

ESA UNCLASSIFIED – For Official Use