SOAREX-VI
NASA Hypersonic Program

SOAREX-VI Re-entry Flight Test Experiment - Electronic Systems of the Slotted Compression RAMP (SCRAMP) Probe

Fifth Annual
International Planetary Probe Workshop
Bordeaux, France
26jun07

Bruce White - NASA Ames Research Center
Marcus Murbach - NASA Ames Research Center
Herbert Morgan - NASA Wallops Flight Facility

Launch

- October 2007
- 500 km altitude
- 1998 km downrange distance
- 4 km/s re-entry

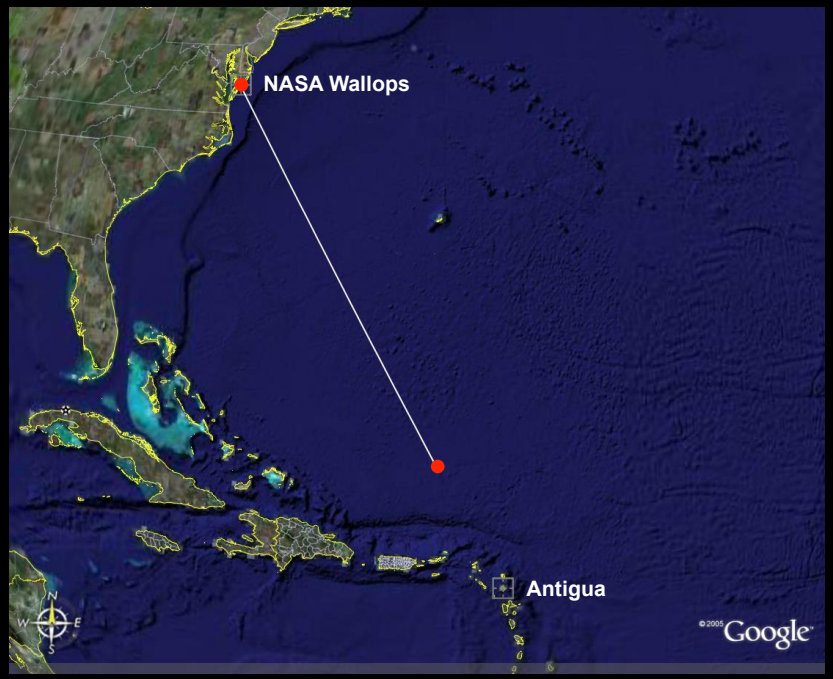

The SCRAMP

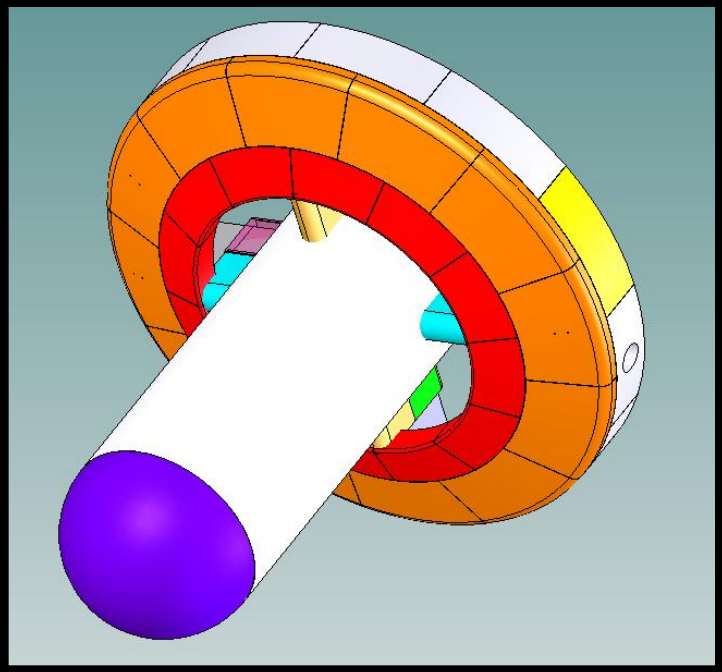

- Previous flight validated shape (30 cm flare)

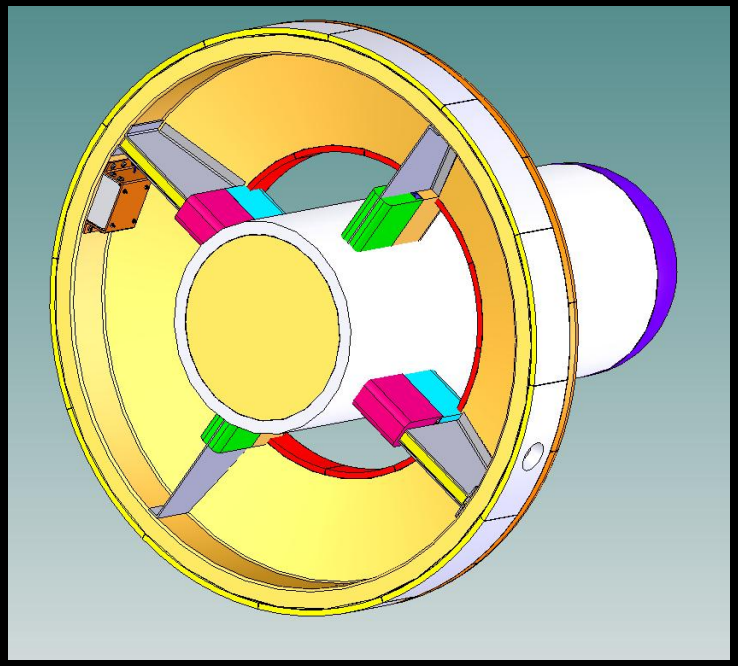

- SOAREX VI will attempt to validate probe large enough to carry appreciable science payload (56 cm flare)

SOAREX-VI
NASA Hypersonic Program

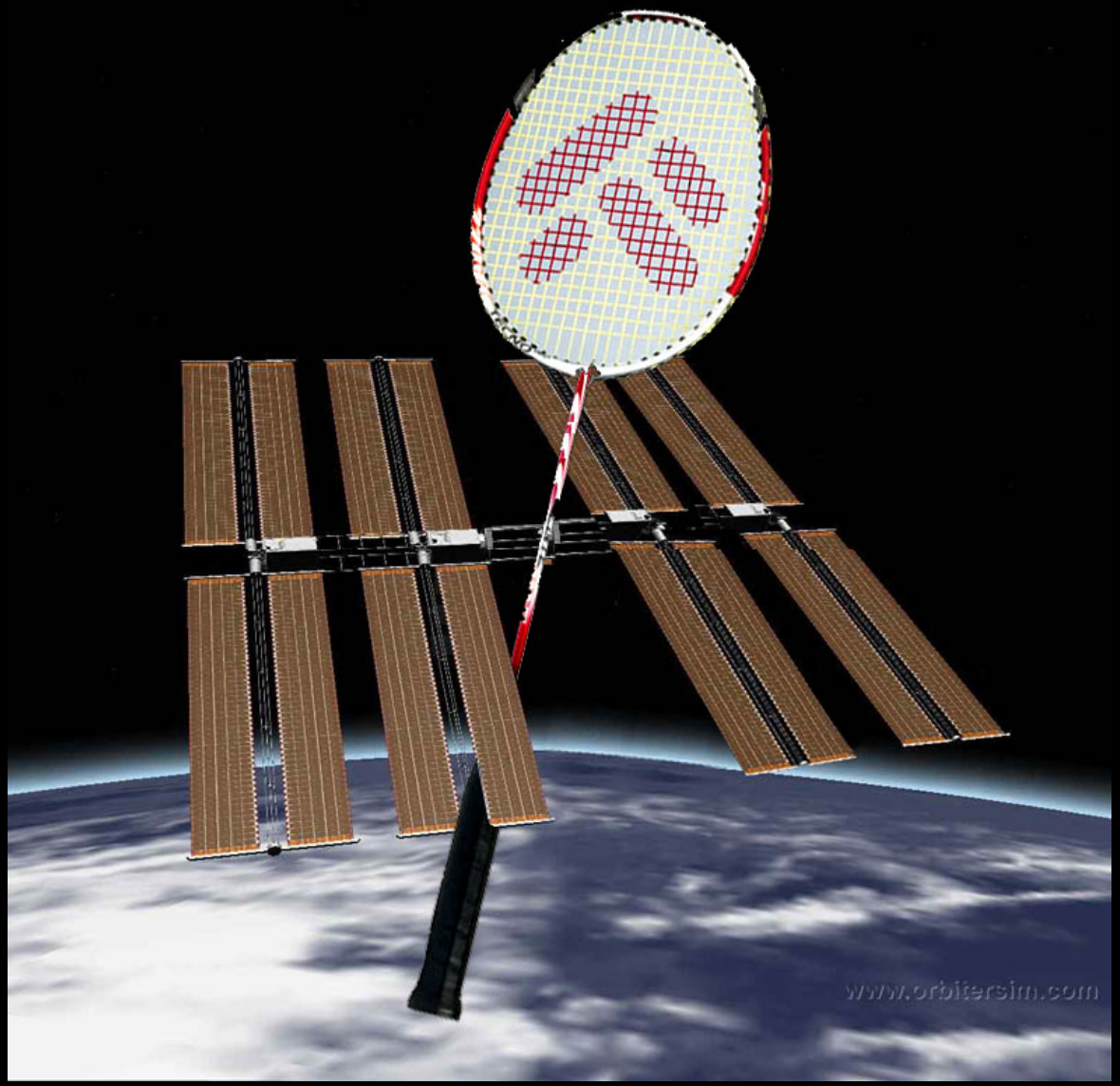

SCRAMP Electronic Systems

- Initiation
- Sensing
- Data Handling
- Telemetry

** Power system non-centralized*

SCRAMP Internal Layout

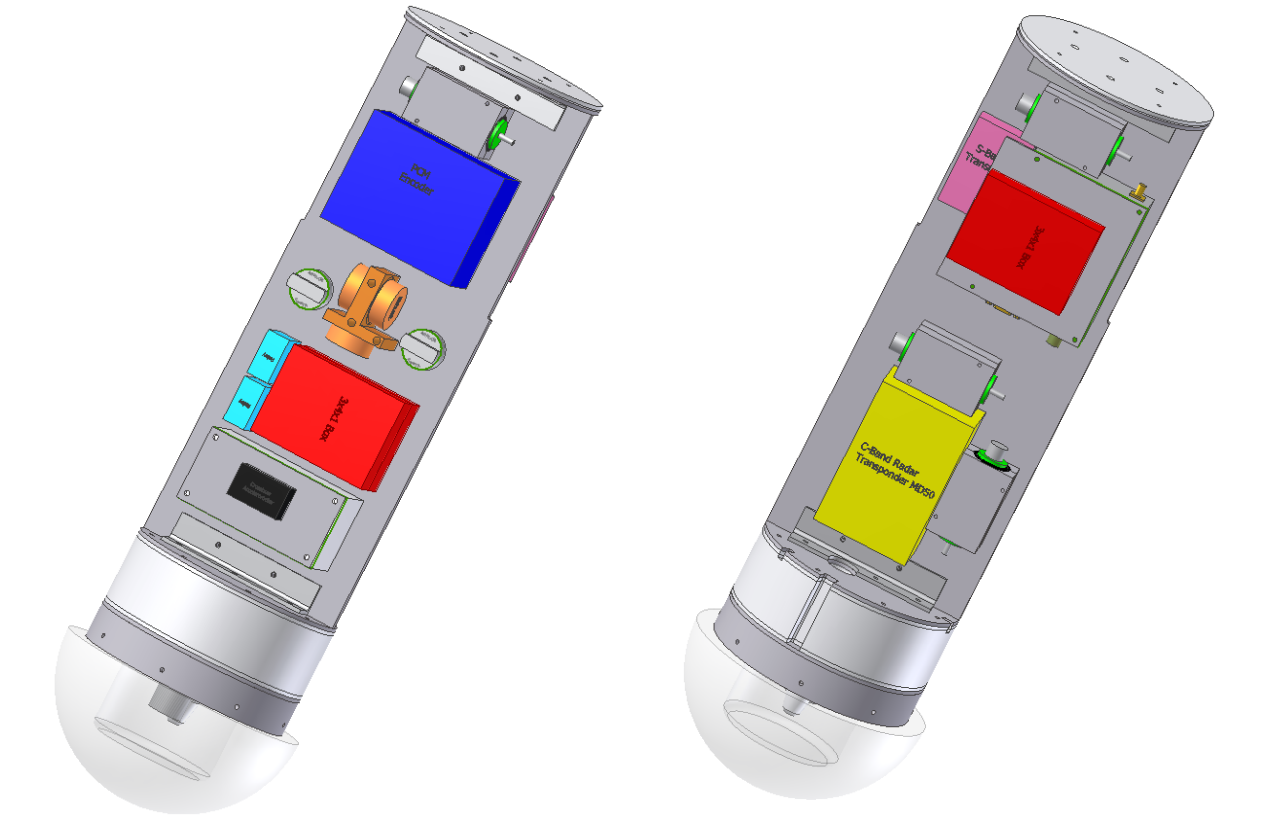

Initiation

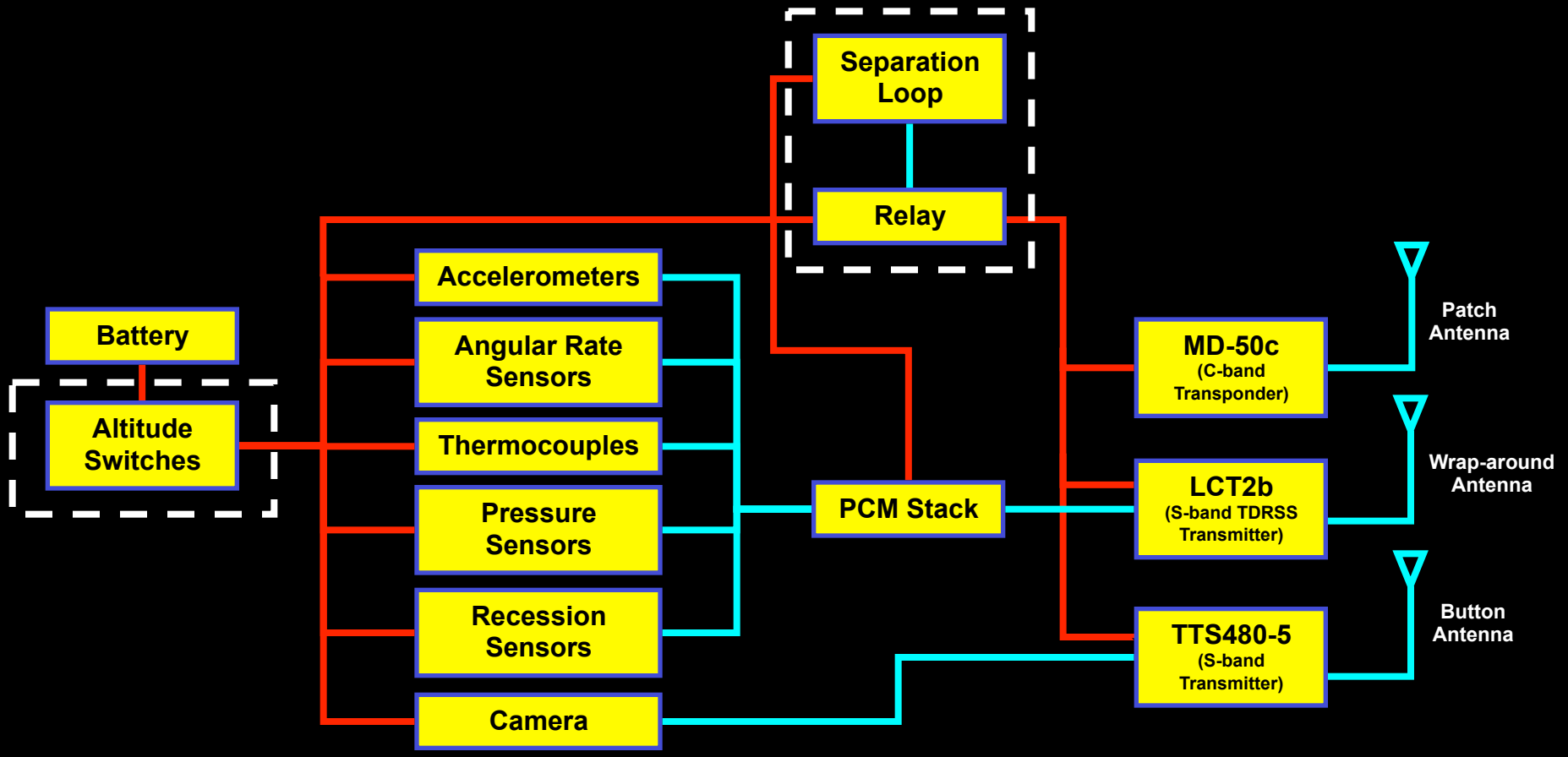
Separation Loop
Relay
Battery
Altitude Switches
Accelerometers
Angular Rate Sensors
Thermocouples
Pressure Sensors
Recession Sensors
Camera
PCM Stack
MD-50c (C-band Transponder)
LCT2b (S-band TDRSS Transmitter)
TTS480-5 (S-band Transmitter)
Patch Antenna
Wrap-around Antenna
Button Antenna

Sensors

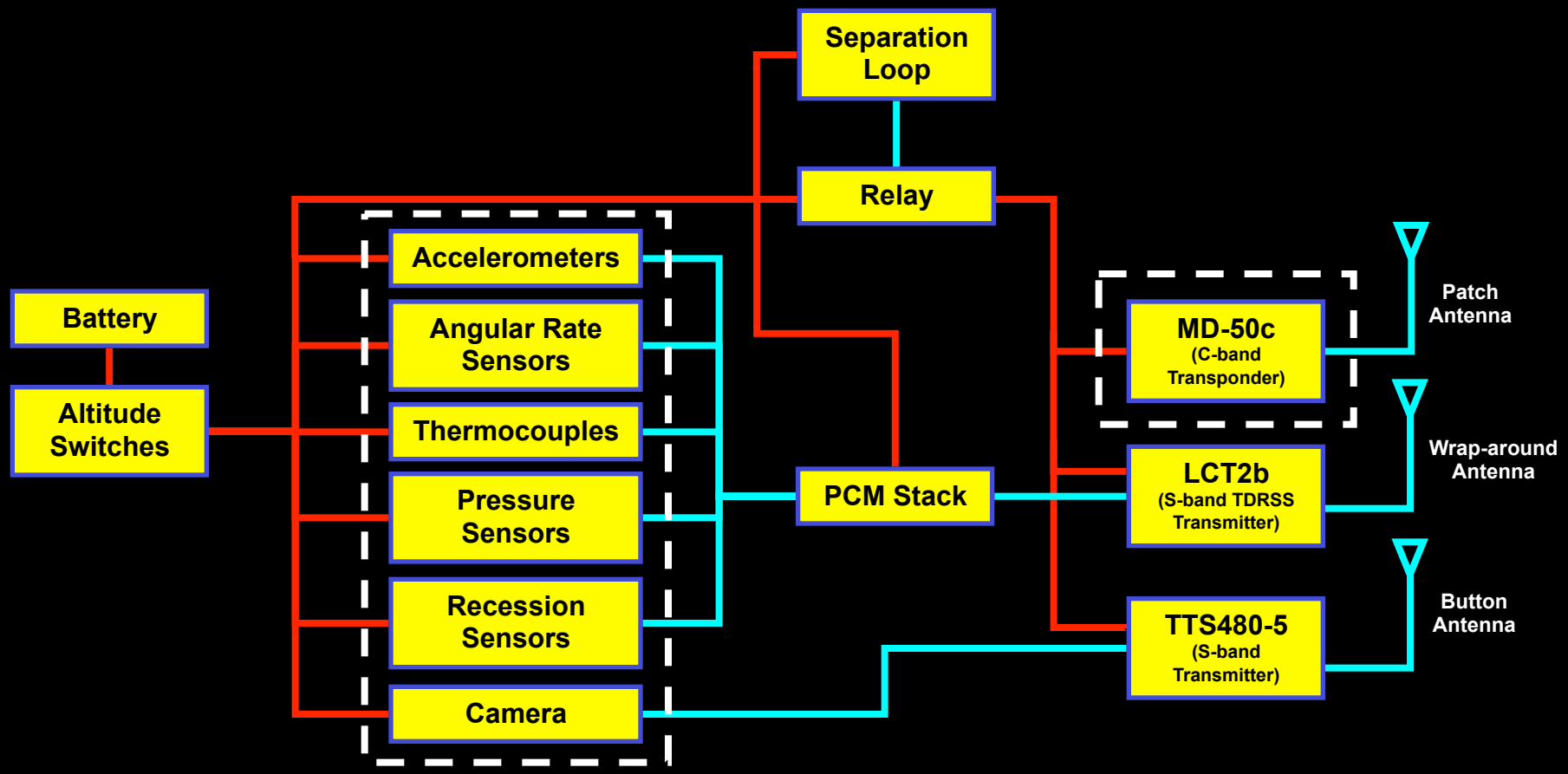
Separation Loop
Relay
Battery
Altitude Switches
Accelerometers
Angular Rate Sensors
Thermocouples
Pressure Sensors
Recession Sensors
Camera
PCM Stack
MD-50c
(C-band Transponder)
LCT2b
(S-band TDRSS Transmitter)
TTS480-5
(S-band Transmitter)
Patch Antenna
Wrap-around Antenna
Button Antenna

Data Handling

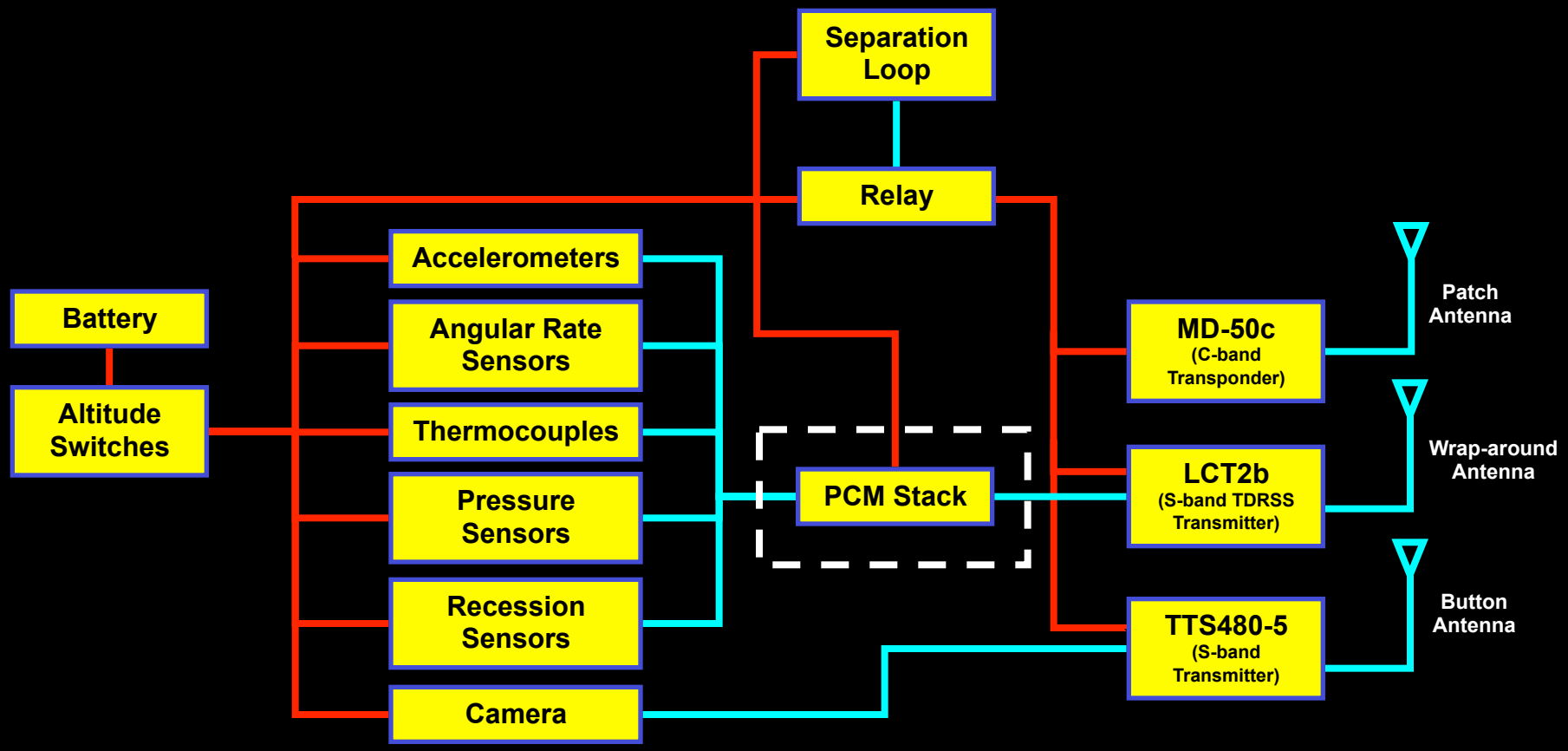

Telemetry

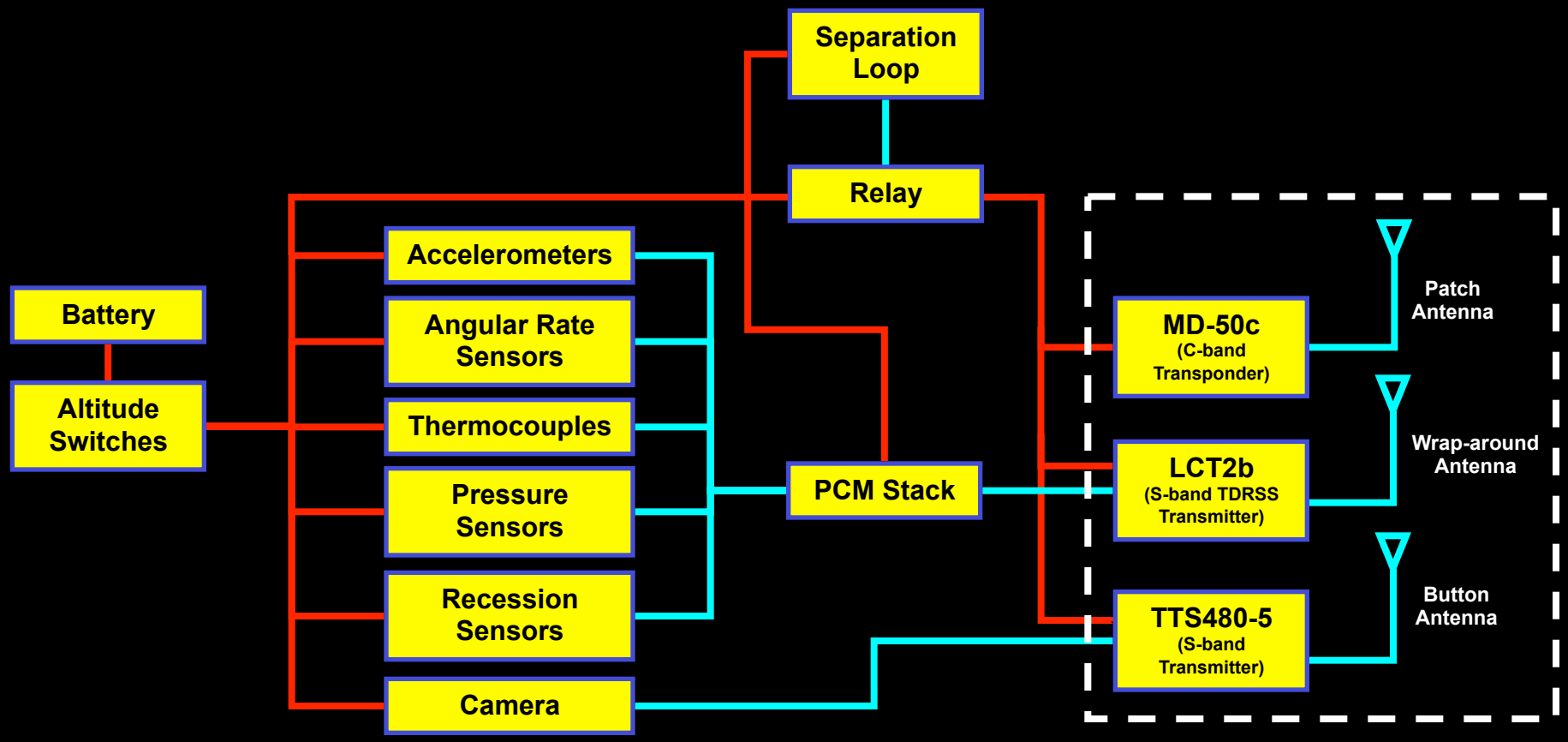
Separation Loop
Relay
Battery
Altitude Switches
Accelerometers
Angular Rate Sensors
Thermocouples
Pressure Sensors
Recession Sensors
Camera
PCM Stack
MD-50c
(C-band Transponder)
LCT2b
(S-band TDRSS Transmitter)
TTS480-5
(S-band Transmitter)
Patch Antenna
Wrap-around Antenna
Button Antenna

Initiation

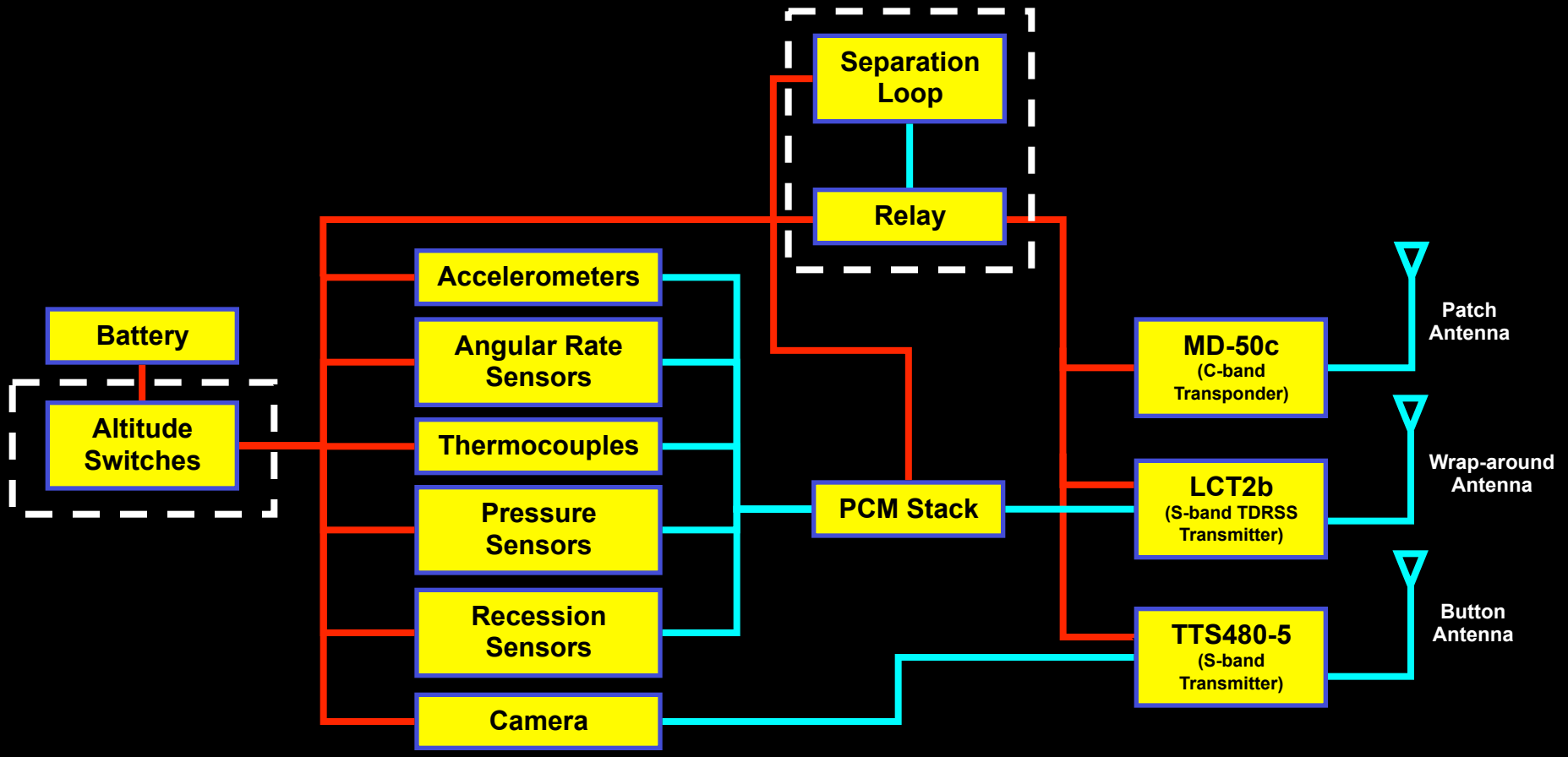
Separation Loop
Relay
Battery
Altitude Switches
Accelerometers
Angular Rate Sensors
Thermocouples
Pressure Sensors
Recession Sensors
Camera
PCM Stack
MD-50c (C-band Transponder)
LCT2b (S-band TDRSS Transmitter)
TTS480-5 (S-band Transmitter)
Patch Antenna
Wrap-around Antenna
Button Antenna

Initiation

- Sensors and data handling activated at 1.5 km by altitude switches - prevents launch pad battery drain

- Telemetry activated at 298 km altitude by umbilical cut by pyrotechnic event - prevents RF interference with launch vehicle telemetry* and flight termination systems

** Launch vehicle TM no longer in use at start of SOAREX RF transmission*

Initiation System Separation Loop

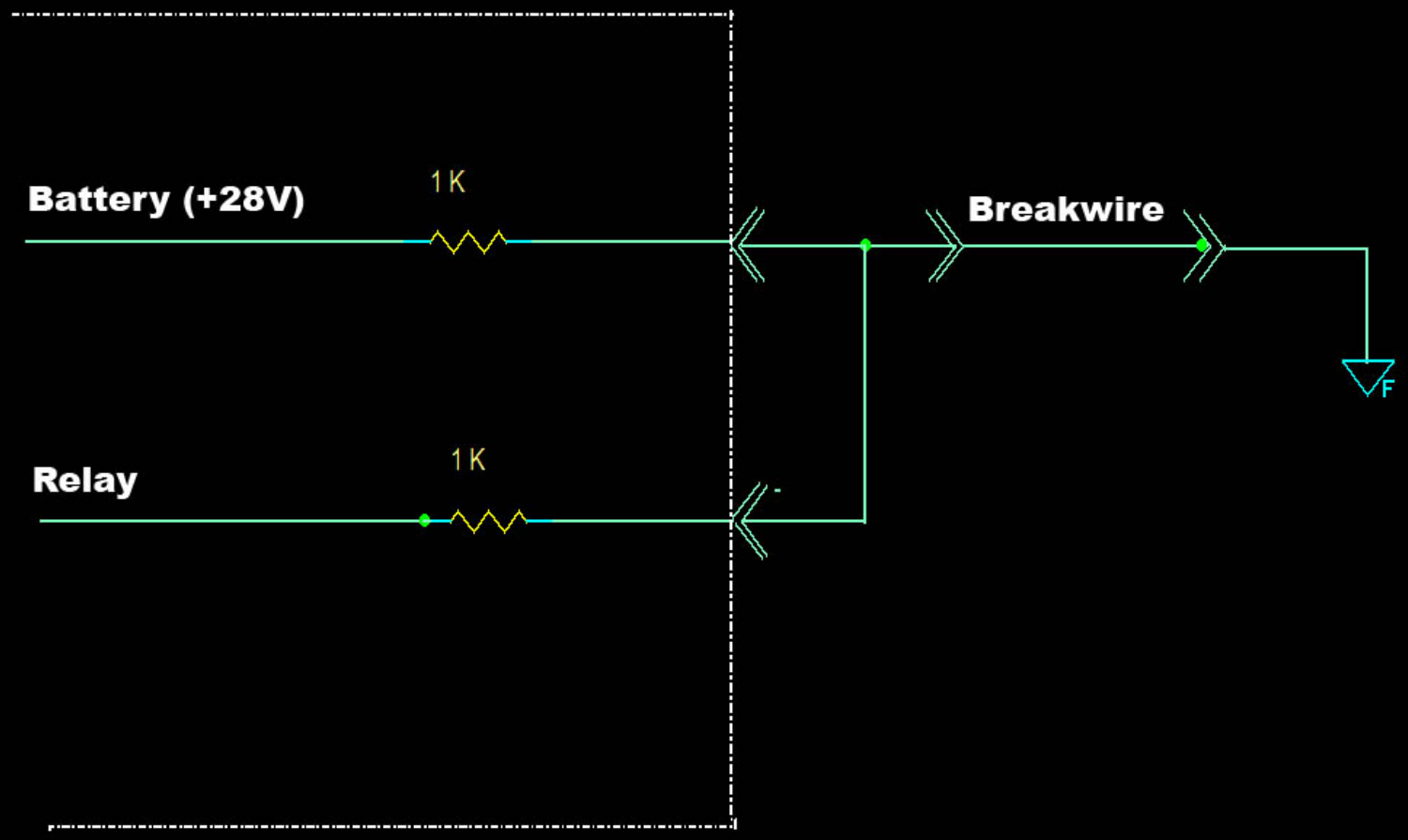

Sensors

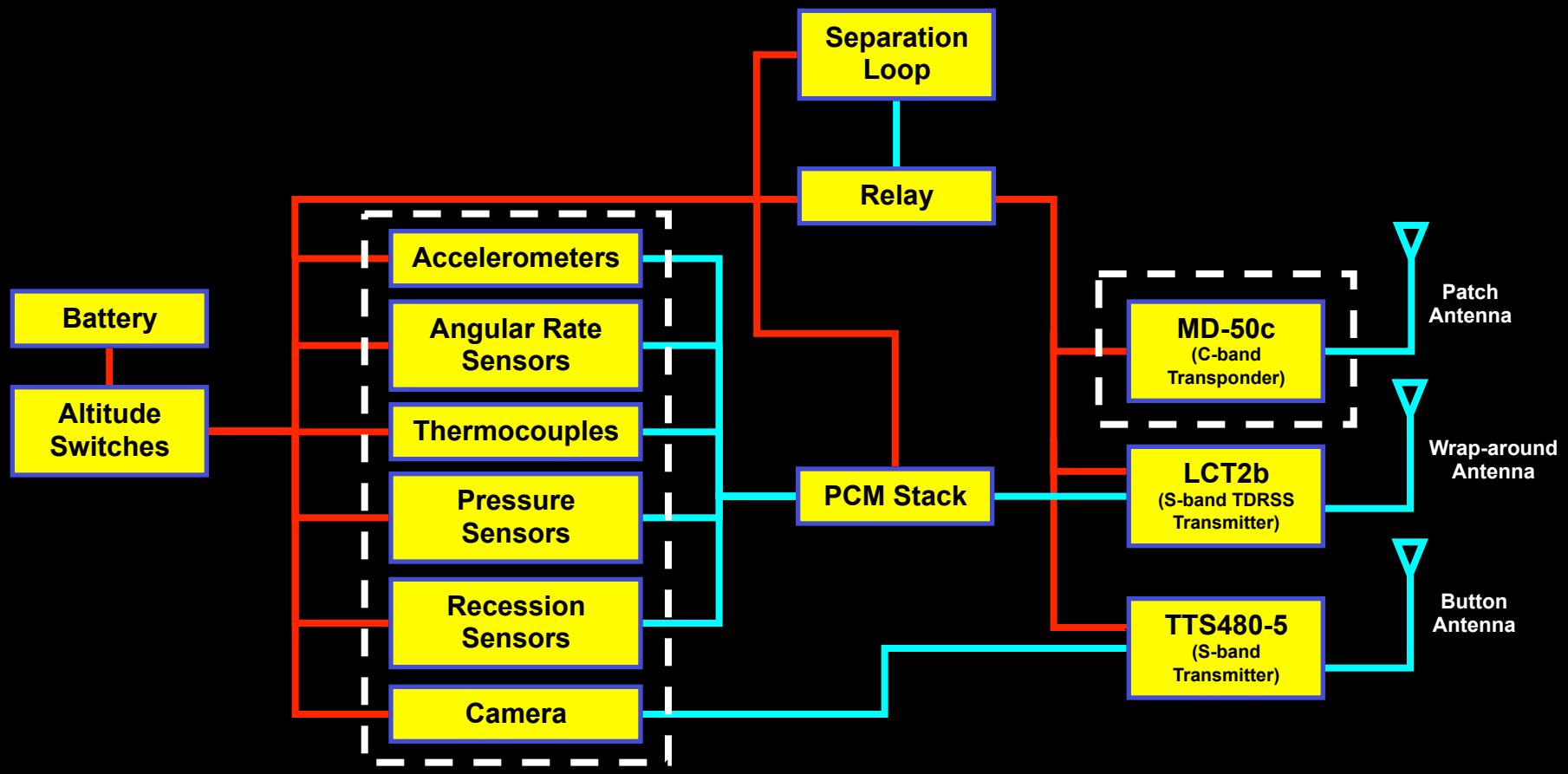
Separation Loop
Relay
Battery
Altitude Switches
Accelerometers
Angular Rate Sensors
Thermocouples
Pressure Sensors
Recession Sensors
Camera
PCM Stack
MD-50c
(C-band Transponder)
LCT2b
(S-band TDRSS Transmitter)
TTS480-5
(S-band Transmitter)
Patch Antenna
Wrap-around Antenna
Button Antenna

Sensors

Motion

- **Angular Rate -** Systron-Donner QRS11 angular rate sensors (±0-1000°/sec, 2.5mV/°/sec)
- **Acceleration -** Crossbow CXL25LP3 triaxial accelerometer (±25g, 10mg RMS)
- **Velocity, Position -** Herley MD-50c C-band radar transponder
- **Stability, entry angle -** Supercircuits PC169XS (70° FOV, 480 lines)

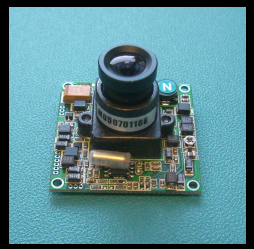

Environment

- **Pressure -** GP50 242 pressure transducers (0-30 PSIA, ±0.5% FSO)
- **Temperature -** Omega type-K thermocouples (–270 to 1372°C, ±1.5° C)
- **TPS Recession -** Hollow aErothermal Ablation Temperature (HEAT) sensors (24.13–0mm, ±0.5mm)

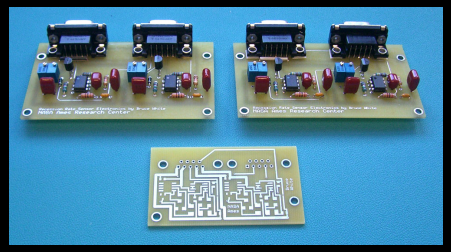

Sensor Placement

- Thermocouple 7 & 8 internal for calibration temperatures

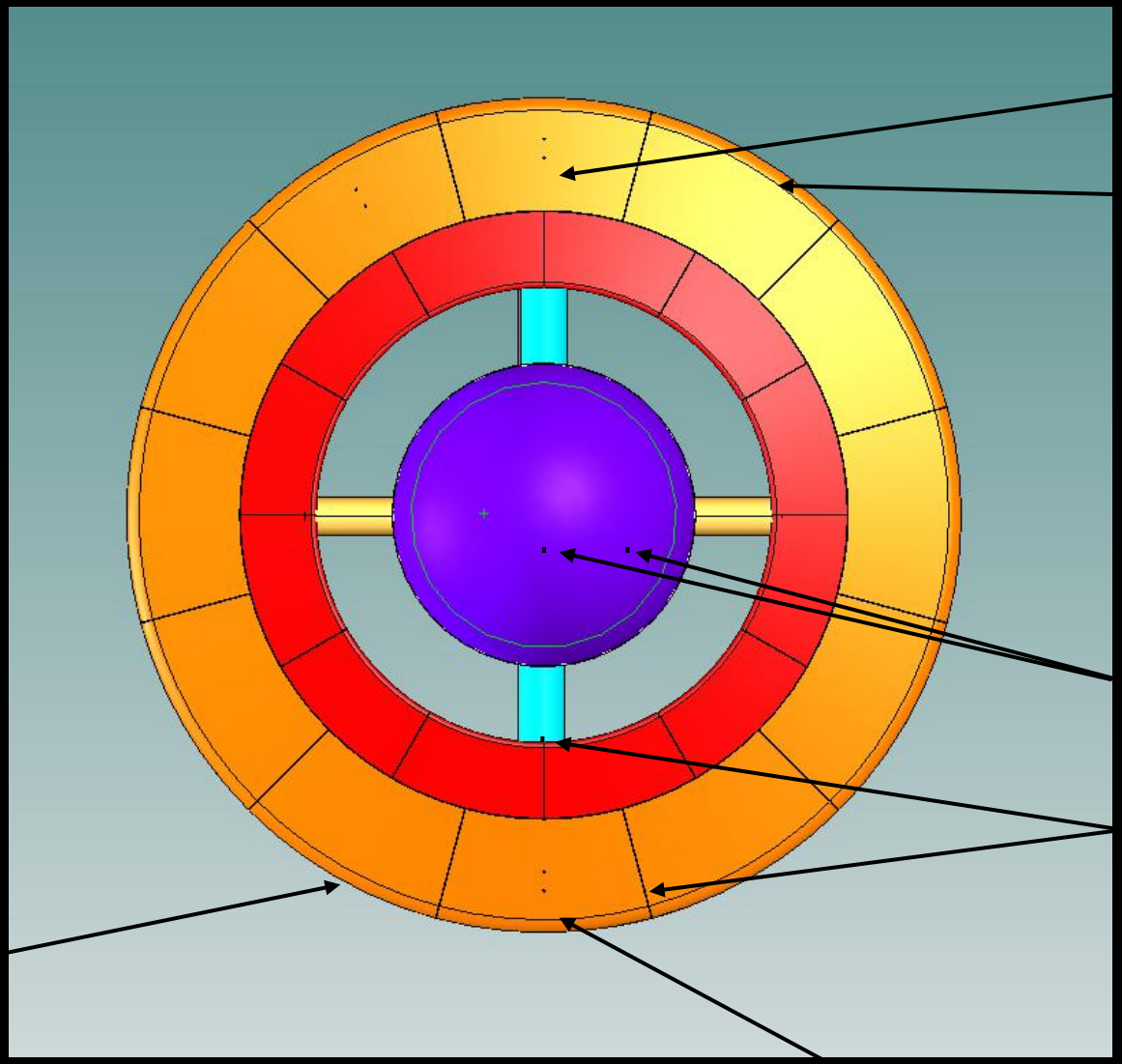

Video Camera

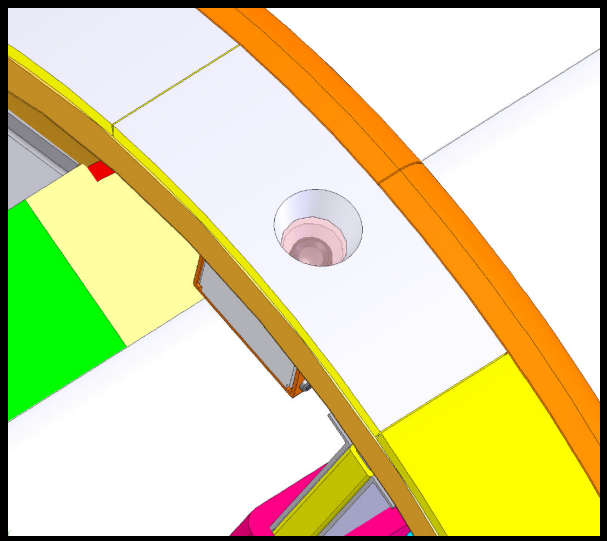

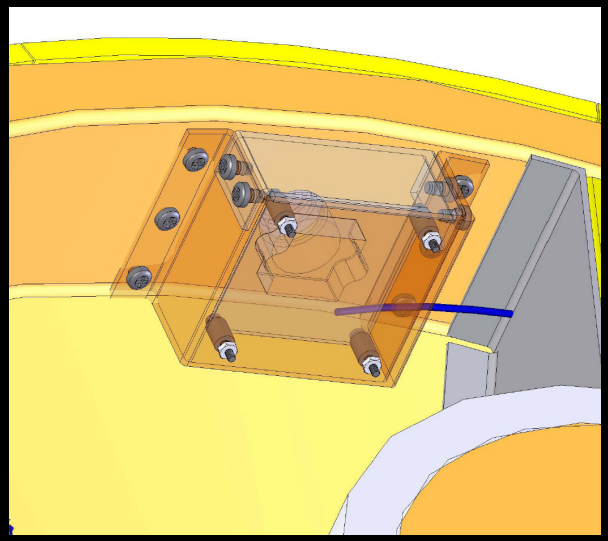

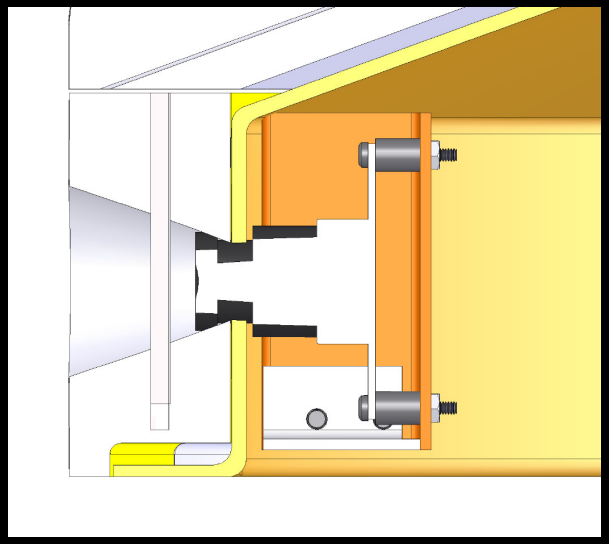

Data Handling

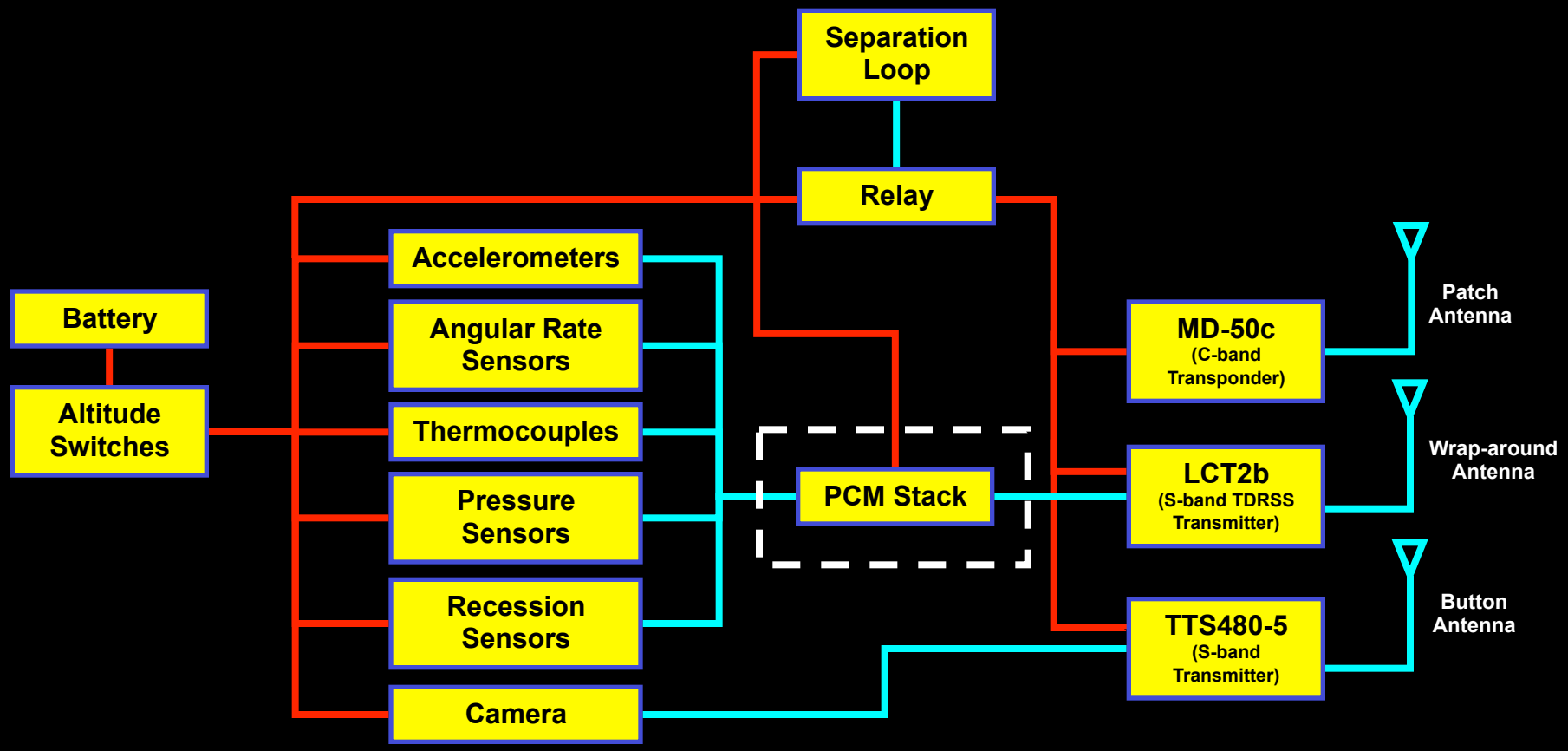

Data Handling

Pulse Code Modulation (PCM) Encoder built by NASA Wallops Flight Facility

- **Input -** 20 x 16 bit ADCs
- **Output -** 10 kbits/second, 10 bit word, Bi-phase level

Word 0	Word 1	Word 2	Word 3	Word 4	Word 5	Word 6	Word 7	Word 8	Word 9	Word 10	Word 11	Word 12	Word 13	Word 14
Sync	Sync	SFID	Press 1	Press 2	Press 3	Press 4	Accel x	Accel y	Accel z	Gyro x	Gyro y	Gyro z	Temp 1	Temp 2
Sync	Sync	SFID	Press 1	Press 2	Press 3	Press 4	Accel x	Accel y	Accel z	Gyro x	Gyro y	Gyro z	Temp 3	Temp 3
Sync	Sync	SFID	Press 1	Press 2	Press 3	Press 4	Accel x	Accel y	Accel z	Gyro x	Gyro y	Gyro z	Temp 5	Temp 4
Sync	Sync	SFID	Press 1	Press 2	Press 3	Press 4	Accel x	Accel y	Accel z	Gyro x	Gyro y	Gyro z	Temp 7	Temp 5
Sync	Sync	SFID	Press 1	Press 2	Press 3	Press 4	Accel x	Accel y	Accel z	Gyro x	Gyro y	Gyro z	HEAT 1	HEAT 2

- **Pressure -** 66.6 samples/second
- **Acceleration -** 66.6 samples/second
- **Angular Rate -** 66.6 samples/second
- **Temperature -** 13.3 samples/second
- **TPS Recession -** 13.3 samples/second

Telemetry

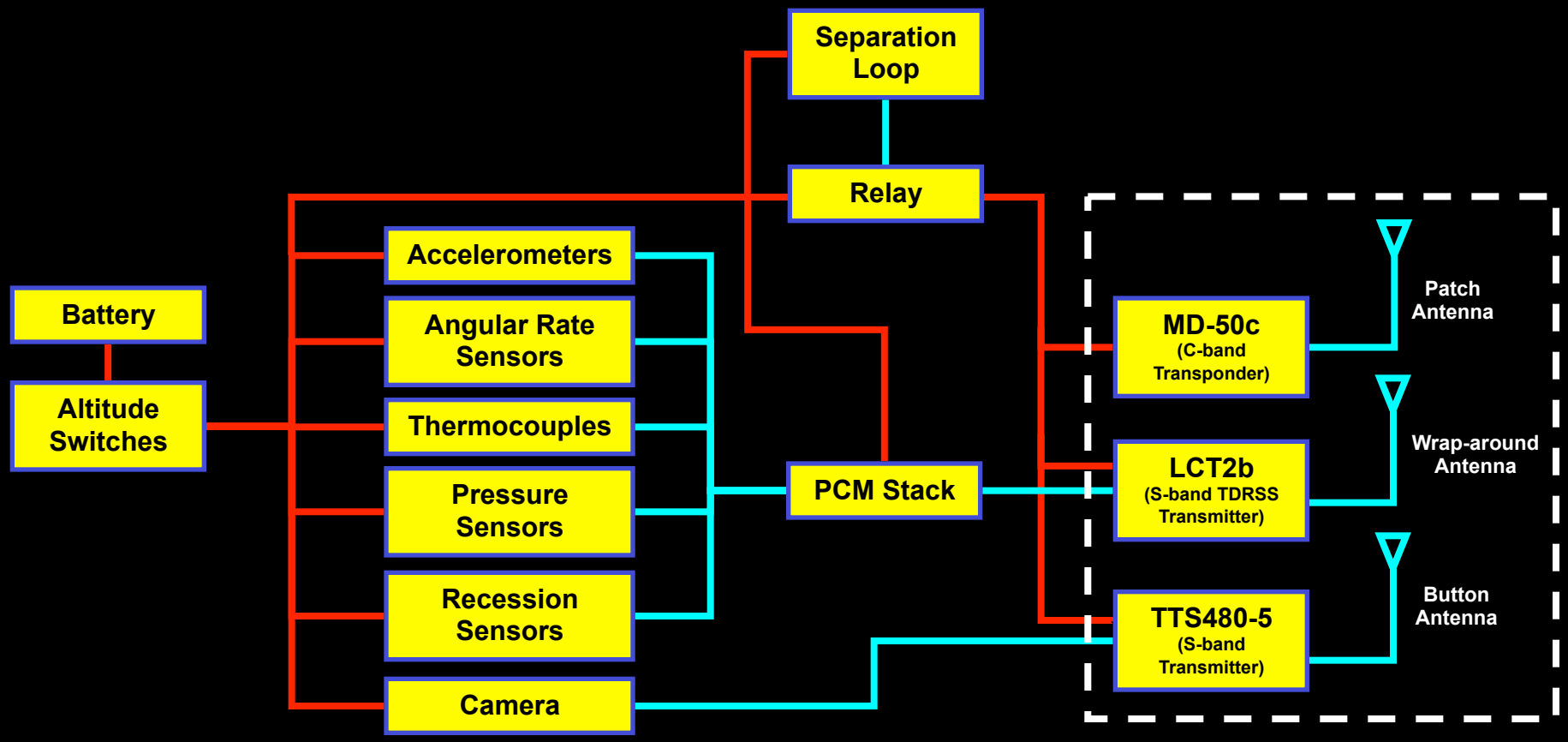
Separation Loop
Relay
Battery
Altitude Switches
Accelerometers
Angular Rate Sensors
Thermocouples
Pressure Sensors
Recession Sensors
Camera
PCM Stack
MD-50c
(C-band Transponder)
LCT2b
(S-band TDRSS Transmitter)
TTS480-5
(S-band Transmitter)
Patch Antenna
Wrap-around Antenna
Button Antenna

Telemetry Assets

MD-50c C-band Radar Transponder (Radar)
- NASA Wallops Flight Facility
- Antigua

LCT2b S-band Transmitter (Sensor Data)
- TDRSS*
- Antigua

TTS480-5 S-band Transmitter (Analog Video)
- NASA Wallops Flight Facility
- Antigua

*** TDRSS limits LCT2b to 10k bits/second**

Telemetry Timeline

Time (s)	Event	Altitude (km)	Range (km)	Lat (deg)	Long (deg)
188	WFF and TDRSS AOS	298	361	35.47	72.72
248	Antigua AOS	389	520	34.39	72.00
433	Apogee	509	996	30.07	68.33
733	WFF LOS	182	1785	25.35	63.70
795	Antigua LOS	93	1958	24.07	62.55
803	Splash - TDRSS LOS	0	1998	23.78	62.33

Antigua, then Mars!