MARCO POLO: AN ASTEROID SAMPLE RETURNS TO EARTH
7TH INTERNATIONAL PLANETARY PROBE WORKSHOP
12-18 JUNE 2010, BARCELONA

Lisa Peacocke[(1)], Marie-Claire Perkinson[(1)], and Jörn Bellermann[(2)]

[(1)]EADS Astrium, Gunnels Wood Road, Stevenage, Hertfordshire, SG1 2AS, United Kingdom, lisa.peacocke@astrium.eads.net
[(2)]EADS Astrium, 33165 St Médard en Jalles, Cedex France, joern.bellermann@astrium.eads.net

ABSTRACT

Marco Polo is a candidate mission for ESA's Cosmic Vision programme [1], aiming to obtain a sample of asteroid surface material and return it safely to the Earth. Asteroids are very primitive objects, of great interest to scientists, having recorded the history and formation of our solar system. An asteroid sample would give us critical and fundamental information [2].

The Marco Polo spacecraft would travel to asteroid 1999 JU3, rendezvous with the asteroid, and then map the surface to select a sampling site. Descent to the surface and touchdown would be performed, and a sample of regolith material obtained with a rotating corer mechanism. The spacecraft would then return to the Earth.

An Earth Re-entry Capsule (ERC), containing the sample, would re-enter the Earth's atmosphere at 12.1 km/s, receiving extreme thermal loads. The design of the Marco Polo mission, and the ERC in particular, will be outlined in this paper.

1. MARCO POLO

Asteroids are some of the most primitive bodies in our solar system and are of great scientific interest due to their fossil-like nature [3]. They contain vital clues about the processes of solar system and planetary formation that assist in our understanding of Earth, as well as providing information on the nature and origin of any organics or pre-solar material in the asteroids. Near-Earth asteroids (NEAs) also represent a potential Earth impact threat, and their structure and composition must be understood before any deflection attempts can reliably be made.

The primary goal of the Marco Polo mission is to obtain a sample from a near-Earth asteroid belonging to a primitive class, and return it to the Earth for extensive analysis in high precision laboratories. Such highly sensitive chemical and mineralogical analyses cannot be performed by a spacecraft at the asteroid. An asteroid sample return mission is vital to answer fundamental questions such as:

- What were the properties of the building blocks of the terrestrial planets?
- What are the organics in primitive materials?
- What is the role of impacts by NEOs in the origin and evolution on Earth? [3]

An asteroid sample return mission would be a significant step in our understanding of the origin of the solar system.

As well as obtaining a sample, preferably of some 30-100 grams, Marco Polo must also provide complementary science so the collected sample can be placed in context. During these operations, the Marco Polo spacecraft must ensure safe operation and manoeuvring in close proximity to the asteroid.

A 12 month assessment study of the Marco Polo mission was concluded in September 2009, under ESA contract. The study team was led by Astrium Satellites, and included Astrium Space Transportation, Selex Galileo and the Deutsches Zentrum für Luft- und Raumfahrt (DLR).

The study had the following programmatic requirements to ensure a robust design:

- Nominal and back-up launches to be identified from 2017-2018.
- Asteroid stay time of 8-24 months with total mission operations less than 8 years.
- Technologies preferred to be at Technology Readiness Level (TRL) 5 in 2009.

A thorough analysis of the science, mission, and programmatic requirements was performed in the initial part of the study. Various architecture options were investigated for the sample return mission, with 52 potential missions evaluated and then down-selected to 5 major architectures as in Fig.1. A detailed trade-off analysis was then performed to select the optimal

mission design, including the launch and transfer strategy, proximity operations, and return strategy. Four critical technologies were identified and studied, and preliminary designs for the spacecraft and Earth Re-entry Capsule (ERC) were completed.

Architecture No.	S/C elements		Configuration
1	PRM	ORB/DM/SM/ERV	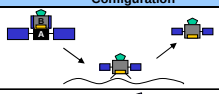
2	PRM/ORB	DM/SM/ERV	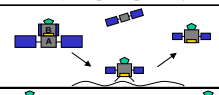
3	PRM/ORB/ERV	DM/SM	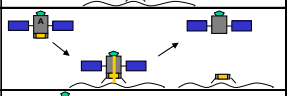
4	PRM/DM/SM	ORB/ERV	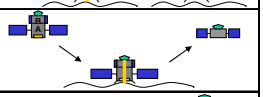
5	PRM/ORB/DM/SM/ERV		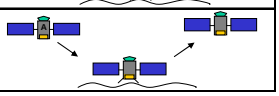

Fig. 1. Marco Polo's 5 major architectures.

Note: PRM = Propulsion Module, ORB = Orbiter, DM = Descent Module, SM = Sampling Module, ERV = Earth Return Vehicle

In Fig. 1, architecture 1 comprises a simple propulsion module that is separated after the outward transfer, and a landing/return vehicle. Architecture 2 includes a full orbiter with remote sensing payload that separates after the outward transfer, and a lander/return vehicle. Architecture 3 is effectively a single spacecraft that leaves the landing gear, sampling system and in-situ payload at the asteroid to reduce dead mass on return. Architecture 4 is a landing spacecraft with a very small spin-stabilised return vehicle, to minimise mass for the return. Architecture 5 is a single spacecraft.

Initially, it was expected that Marco Polo would be a collaboration between ESA and the Japanese Aerospace Exploration Agency (JAXA), in a follow-on to the JAXA Hayabusa mission. Hayabusa visited asteroid 25143 Itokawa as a technology demonstrator, and attempted to obtain a microgram sample using a projectile and funnel mechanism. The Hayabusa ERC will be returning to Earth in June 2010. During the Marco Polo study, it was decided to proceed with an ESA-led mission architecture, but the requirements to be compatible with a Hayabusa-type mission remained.

2. MISSION DESIGN

The baseline Marco Polo mission design is depicted in Fig.2 – a single spacecraft (architecture 5) performing all manoeuvres with an attached Earth Re-entry Capsule. The target asteroid is 1999 JU3, a primitive class C [4] near-Earth asteroid. A single chemical propulsion system is used for the outbound and return transfers. This particular architecture was selected after the trade-off analysis as it is the lowest cost and mass mission with low risk implementation.

The asteroid 1999 JU3 is of small size, only 780 m in diameter and approximately 3E+11 kg, giving it a very low gravitational environment. Due to its small size, it has a relatively fast rotation period of 7.7 hours. It has an absolute magnitude of 19.2, and an eccentric orbit, with a perihelion of 0.96 AU and aphelion of 1.42 AU. The maximum temperature experienced by the surface at perihelion is 399K. These factors all add up to equal a challenging environment for a spacecraft to visit. It is also one of the most primitive types of asteroids [4], and a sample from such an asteroid is highly desired by scientists. The delta-V to reach 1999 JU3 is dependent on the launch date, but is a minimum of 2599 m/s.

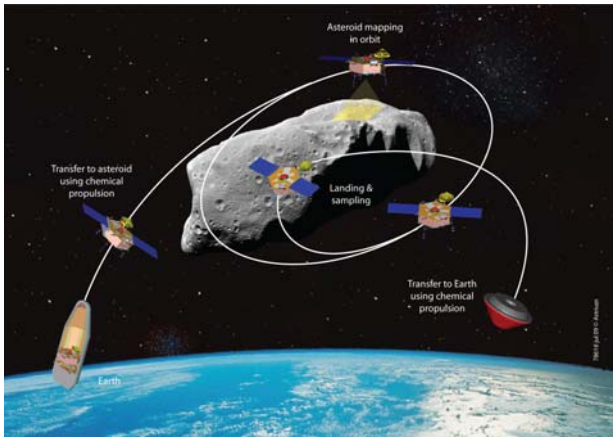

Fig 2. Marco Polo mission architecture.

A Soyuz-Fregat 2-1B [5] would launch the Marco Polo spacecraft in November 2018, into a direct escape trajectory. The chemical engine would fire and initiate the transfer to asteroid 1999 JU3. The spacecraft would arrive at the asteroid in March 2022, and then perform far characterisation and radio science campaigns to accurately measure the mass of the asteroid. A global characterisation phase would then take place, to map the surface of the asteroid and identify potential sampling sites, followed by local characterisation of the five preferred landing sites by close fly-bys or hovering.

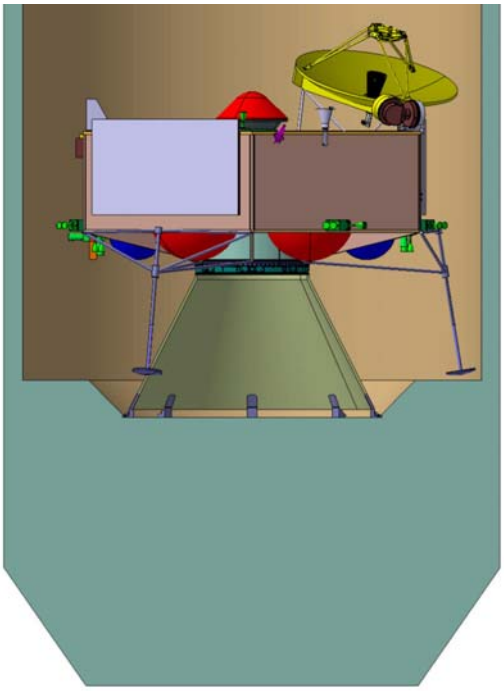

Fig. 3. Marco Polo space segment in Soyuz ST fairing.

Three potential landing sites would then be selected, and sampling rehearsals performed. The spacecraft would then initiate the descent and sampling manoeuvres, to be completed by visual navigation. The descent sequence starts from a 2 km orbit and moves the spacecraft down to a gate position orbit at 500 m above the asteroid surface, at which point an Earth command will initiate the autonomous final descent phase. At 50 m above the surface, the spacecraft enters a free vertical descent, and touches down on the surface with three landing legs at a maximum speed of 20 cm/s.

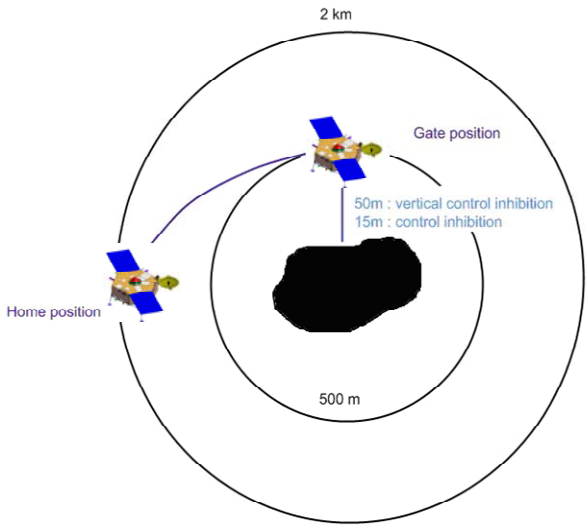

Fig. 4. Descent strategy.

Once on the surface, the thrusters would continue to fire, to hold down the spacecraft in the microgravity environment while the autonomous sampling sequence takes place. A robot arm would reach down with a rotating corer mechanism to obtain a 30-100 g sample of asteroid regolith. If successful, the sample would be transferred to the Earth Re-entry Capsule by the robot arm and safely sealed in a compartment in the back of the ERC. If not successful, the spacecraft would ascend from the surface, return to home position, and attempt another descent. The spacecraft is designed to allow up to three separate sampling attempts.

Once a sample has been obtained and verified, the spacecraft would return to perform further remote sensing science of the asteroid from orbit. In July 2023, the return transfer to Earth would be initiated, and the spacecraft would arrive back in December 2024. The ERC separates from the main spacecraft, is spun-up, and then re-entry takes place at 12.1 km/s, with a parachuted landing in Australia. The sample must be protected inside its strongly sealed compartment at all times during this phase, to ensure it remains in pristine condition.

Beacons within the ERC would be activated to lead the recovery team to the landing site, and the sample would be recovered and transported to a sample curation facility. After extraction of the asteroid sample, extensive analysis would take place in laboratories across the world.

Four critical technologies were identified as being of low maturity, yet essential to the success of Marco Polo. These technologies are:

- Guidance, navigation and control technologies for proximity operations
- Landing/touchdown system technology
- Sampling and sample transfer technology
- Earth re-entry technology

Each of these requires technology development activities to increase their maturity. Most are also highly relevant to other planetary exploration missions, such as Mars Sample Return.

3. SPACECRAFT DESIGN

The Marco Polo landing spacecraft is a 3-axis controlled spacecraft that is designed to land at any location on the illuminated side of the asteroid. It is a hexagonal structure with two folding solar panels and three landing legs. A steerable high gain antenna is attached to the side of the spacecraft, along with a steerable medium gain antenna. The ERC is located in the top centre of the spacecraft, over a central cylinder

where the robot arm and sampling mechanism are stowed, as shown below.

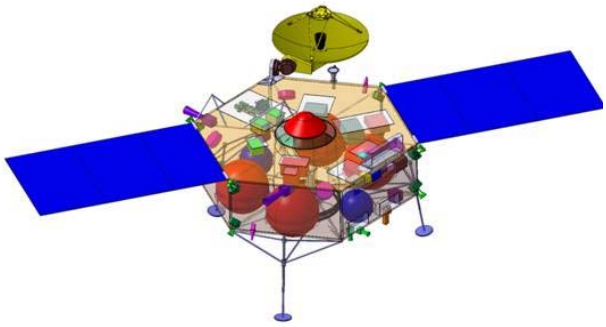

Fig. 5. Marco Polo spacecraft design.

The central cylinder is based on the LISA Pathfinder spacecraft [6] central cylinder, and two hexagonal floors are attached. The lower floor supports the propulsion system, the landing gear, the close-up camera and landing sensors. The upper floor supports the remote sensing payload and all avionics. This configuration allows the parallel integration and test of the mechanical platform and the avionics 'flatsat'.

The spacecraft is approximately 4 m wide, and has a wide and short design to give it a low centre of gravity to improve the stability at landing. The structure is manufactured from aluminium panels, and vertical closure panels protect the payload and tanks from the space environment. Radial shear walls support the two main floors.

A maximum power of 965 W (including margin) is required for the spacecraft during remote sensing, with 658 W required during landing. Solar arrays will provide power during all phases of the mission apart from the descent and landing, where a lithium-ion battery is used. An X-band communications system is required, with an average downlink science data rate of 74 kbit/s. The total data acquired during the asteroid stay is on the order of 1100 Gbit, and the mass memory is sized to store 508 Gbit.

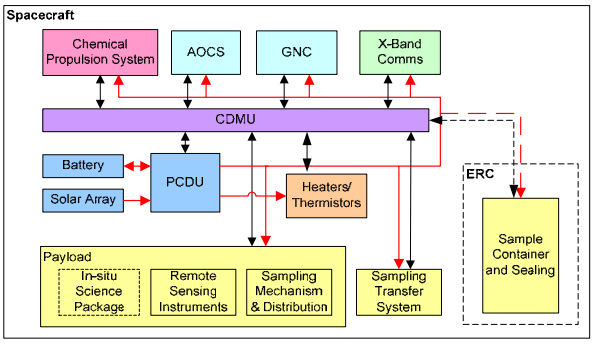

Fig. 6. Marco Polo spacecraft functional architecture.

The propulsion system is a chemical bipropellant system with two 22 N thrusters used for the transfers, and eight 10 N thrusters used for attitude control and proximity operations. The tanks are equatorially mounted on the lower floor of the spacecraft. The propellant mass required for the mission is 663 kg.

Radiators are located on the top panel of the spacecraft, which will face the sun during the landing manoeuvres. A directional reflector is therefore necessary to shade the radiator for the optical bench. Primarily passive thermal control techniques, including multi-layer insulation blankets and thermal fillers, will be used, with some electrical heaters where necessary. The surface finish is selected to minimise absorption and maintain high infrared heat rejection capability. External equipments will reach a temperature of 70°C during the landing manoeuvres.

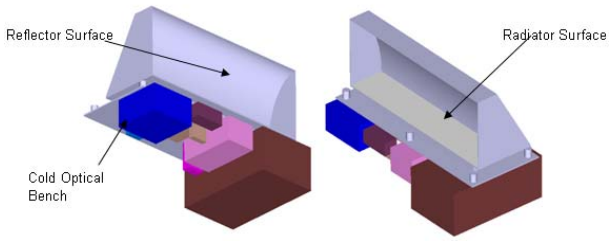

Fig. 7. Directional reflector and radiator for optical bench.

The three landing legs are unidirectional carbon/glass fibre tubes with crushable Rohacell R31 cell material inside. A piston tube with a circular landing pad is guided within each tube, and the crushable material will crush up to 10 cm on each landing attempt, absorbing the impact energy.

The rotating corer mechanism used for sampling is attached to a robotic arm, and is located in the otherwise clear central cylinder. The corer has a chamber volume of 89 cm^3, and has closure doors over the end to retain the sample when it is obtained. A tool drive (mandrel) is used to provide the rotation, which assists the mechanism to enter the asteroid regolith. Breakable sensing wires within the mechanism verify whether a sample was acquired.

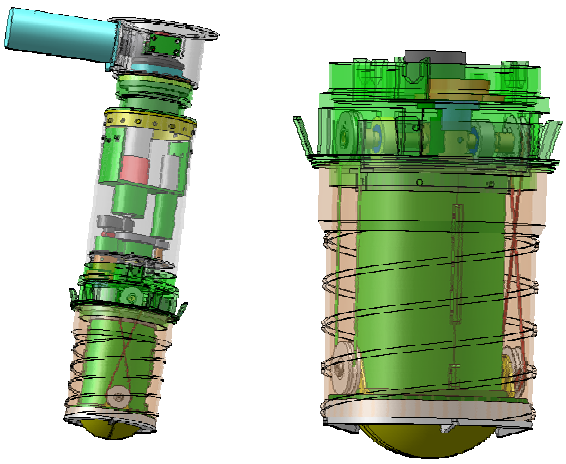

Fig. 8. Sampling mechanism: rotating corer and mandrel

A three degree of freedom robot arm with three rotational joints is used to place the rotating corer on the asteroid surface and transfer it through the central cylinder up to the ERC. A clip mechanism around the corer is used to seal the sample within the sample container. An additional ERC closure lid with integrated thermal protection, pre-attached to the robot arm, is then used to cover the sample and fully seal the back of the ERC.

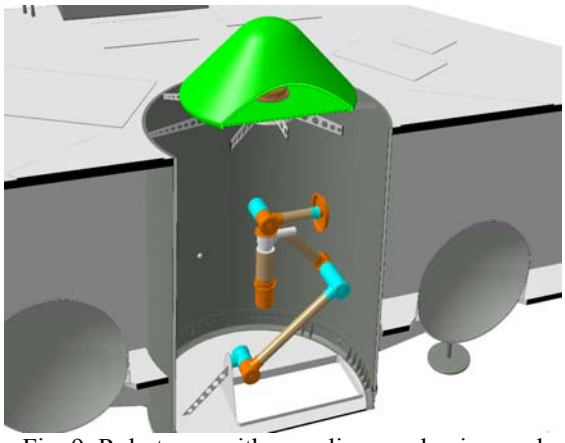

Fig. 9. Robot arm with sampling mechanism and closure lid attached

The ERC is supported on an interface cone between the central cylinder, with a spin-up and eject mechanism for the final separation. There is a four point interface between the ERC and the spin-up and eject mechanism.

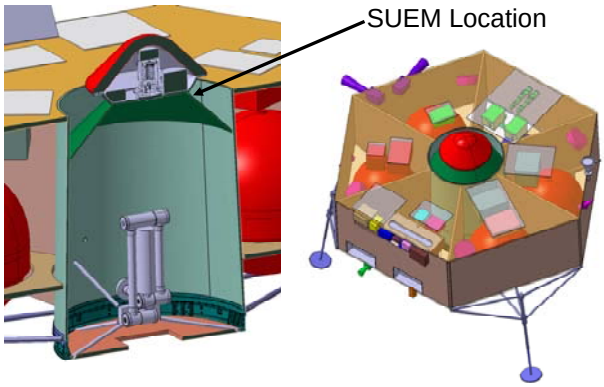

Fig. 10. Interface between ERC and main spacecraft.

The overall composite spacecraft wet mass, including ERC, is 1408 kg for the baseline mission, with a dry mass of 745 kg. A margin of 13% is achieved, with an additional 20% system margin on top of this.

4. EARTH RE-ENTRY CAPSULE DESIGN

The main design drivers for the Earth Re-entry Capsule (ERC) were:

- Hayabusa-type design preferred by ESA.
- Re-entry velocity of 12.1 km/s.
- Mass of 20-30 kg.
- Diameter of 400-600 mm.
- Sample container volume allocation of 100 mm diameter and 200 mm length.
- Maximum g-loads to the sample of 200g (25 Hz) and 800g (100 Hz)
- Provide a recovery time of ~5 days.

A RadFlight-like aeroshape, as illustrated in Fig. 11, was selected for the ERC due to its stability and the extensive aerodynamic database available within Astrium. Such a shape offers a favourable internal volume-to-size ratio. The frontshield has a half-cone angle of 45° and a back cover that will be compliant with a Hayabusa-type separation device.

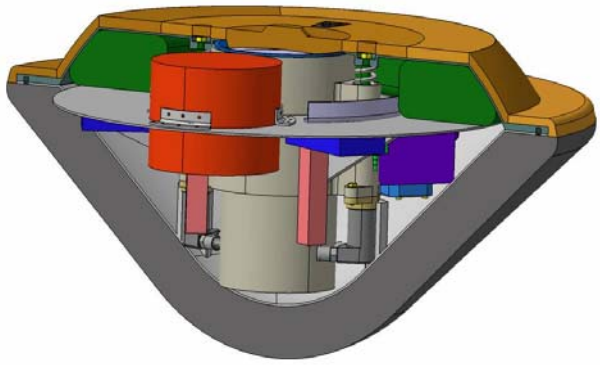

Fig.11. Marco Polo ERC reference design.

5.1 General Architecture

The ERC reference design consists of:

- *Thermal protection system (TPS)* comprising carbon reinforced low density material ASTERM for the frontshield (with Aleastrasil as a backup), and Norcoat liege for the back cover, with high density TPS on the sample container closure door.
- *Structure* of aluminium.
- *Sample containment area* to store the obtained asteroid sample.
- *Two parachutes*, a pilot chute and main parachute.
- *Separation mechanism* based on off-the-shelf pyro-nuts.
- *Dampers* to attenuate high frequency shocks that may occur at launch.
- *Crushable material* to attenuate landing impacts (although following analysis, it was concluded that this is not strictly necessary).
- *Equipments* as detailed in a following section.

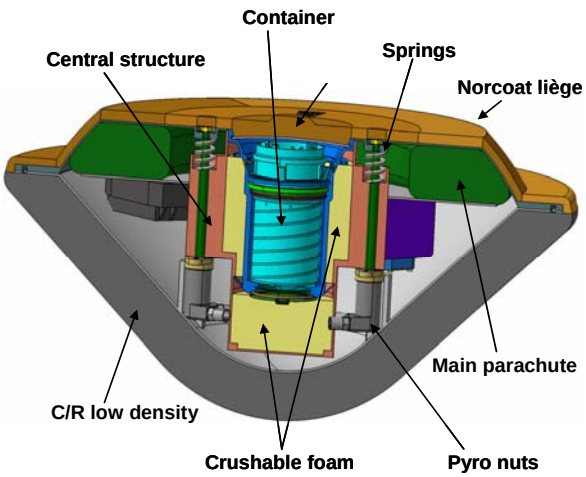

Fig. 12. Marco Polo ERC internal view.

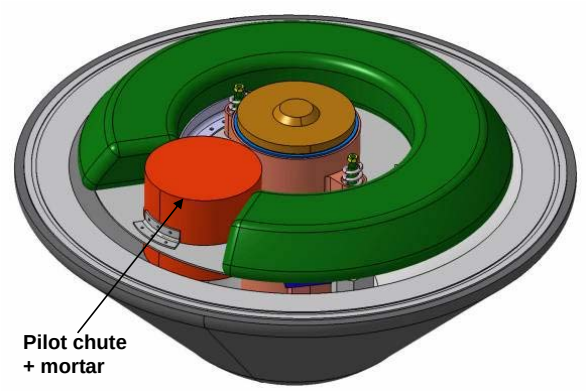

Fig. 13. Marco Polo ERC top view

The equipments include the battery, beacon, accelerometer, pyro-nuts, and central electronics unit.

To avoid shocks to the equipments and overheating, all equipments are integrated onto a dedicated circular stiffened panel fixed to the central structure that supports the sample container, rather than to the front shield or back cover structure.

5.2 Preliminary Sizing

Preliminary sizing analyses were performed to define the TPS thickness, and assess the shocks at landing. The structure design is based on heritage from similar projects, with a 20% margin.

The thickness of the TPS is derived from the allowed temperature limits of the ERC structure, which has been set to 150°C, while the heat flux entering the TPS was calculated and illustrated in Fig. 14.

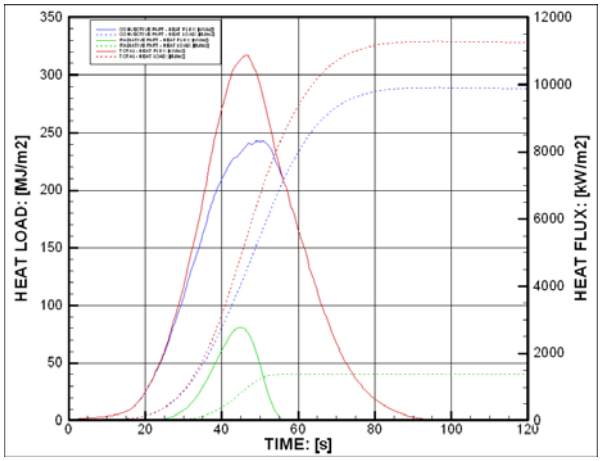

Fig. 14. Heat load to the TPS

A 10-15% margin was included in the thickness assessments, and both extremes of FPA were considered to cover the worst case trajectories. When the 20% margin at mass budget level is included, there is a total margin of 30-35% for the TPS thicknesses outlined in Tab.1.

Tab. 1. TPS thicknesses

		TPS Area Assessed		
Thickness assessed (mm)		Frontshield	Back cover (sides)	Back cover (back)
FPA (°)	7.7	44	10	7.5
	8.7	39	9	6.5
Thickness selected (mm)		50	11	8.5

To minimise shocks and ensure the sample is protected, crushable material is used. The duration of the impact was calculated to be 0.00785 s, with a period of 3.14 ms and a reference frequency of 32 Hz. Crushable materials were investigated, and the majority were found to crush to 70%. The spring stiffness equivalent must be in the range of 40,000 N/m.

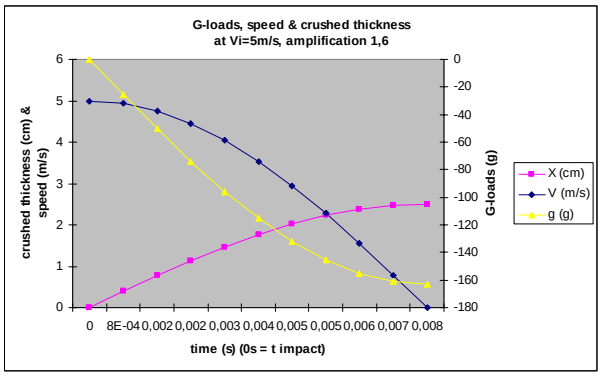

Fig. 15. G-loads, speed and crushed thickness versus time at impact velocity of 5 m/s.

A sensitivity analysis was performed, and the following crushable thicknesses calculated that at 5 m/s impact speed, a crushable material thickness of 25 mm is sufficient to limit g-loads to less than 200g. Many candidate materials are available for such applications.

A mass budget was established, as illustrated Tab. 2. The nominal mass was calculated to be 22.14 kg. When margins were included, a mass of 26.28 kg was calculated.

Tab. 2. Marco Polo ERC mass budget

	Marco polo ERC mass budget				
	material	density	Mass (kg)	Mass + margin (kg)	Margin (%)
Front Shield TPS	ASTERM	0,27	4,48	5,37	20%
Back cover TPS	Norcoat liege	0,47	1,35	1,42	5%
Front shield structure	Aluminium	2,77	1,99	2,39	20%
Back cover structure	Aluminium	2,77	2,52	3,02	20%
PT container	Aleastrasil	1,65	0,36	0,43	20%
Internal container structure	Aluminium	2,77	1,33	1,60	20%
crushable foam	Carbon foam	0,05	0,07	0,08	20%
Sample container	_	_	1,06	1,27	20%
Parachute (drog + main)	_	_	4,00	4,80	20%
Separation device (pyro nuts, spring, screws)	_	_	0,62	0,68	10%
Plateau for equipment	Aluminium	2,77	0,95	1,14	20%
Battery	_	_	1,00	1,20	20%
Emitter + antenna	_	_	0,30	0,36	20%
Central unit	_	_	1,00	1,20	20%
Accelerometer	_	_	0,06	0,06	5%
Harness (5% dry mass)	_	_	1,05	1,25	5%
TOTAL			22,14	26,28	18,7%

The location of the centre of gravity is at 216 mm with respect to the nose, which corresponds to a centring at 36% (assessed by considering nominal masses). This centre of gravity could be pushed forward by the addition of ballast.

5. RE-ENTRY ANALYSIS

6.1 Re-entry Trajectory Assessment

A number of constraints were considered in the re-entry trajectory assessment. According to the thermal protection system (TPS) performance and the Astrium Space Transportation test facility limitations, the heat fluxes experienced by the ERC must be limited to 18 MW/m^2. This includes margins of 100% for radiation, and 20% for convection.

At 120 km altitude and a relative re-entry velocity of 12.1 km/s, the heading angle must be set at 115° west/southwest and a latitude of 30° south. It is still to be determined whether this is a retrograde or prograde entry. Additionally, the g-loads must be limited to 80g to avoid excess stress on the ERC structure and subsystems.

It was assumed that a RadFlight-like ERC would have an entry mass of 25 kg, and a maximum diameter of 600 mm to minimise mass. The frontshield was assumed to have a homothetic nose radius of 180 mm for a 600 mm diameter ERC. The steepest entry was assumed to be preferable, to minimise the landing ellipse, which implies the selection of the flight path angle (FPA) is driven by the peak heat flux and also by the maximum g-load. Using these assumptions, the aeroshape size and trajectory flight path angle were determined to fit within the above constraints.

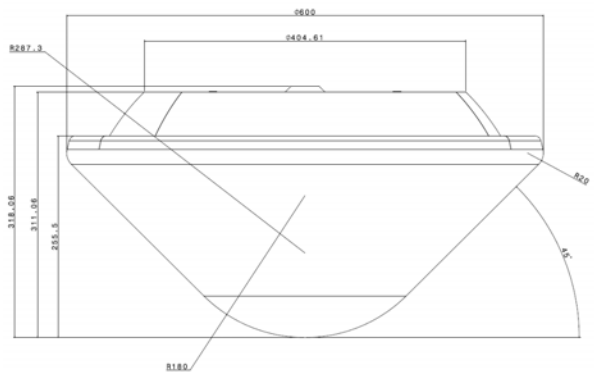

Fig. 16. Marco Polo ERC aeroshape

An entry FPA of -8.2° ± 0.5° results in a sizing FPA range of -8.7° to -7.7°, to comply with the ERC mass and maximum heat flux (convective + radiative). This includes margin for air density and ERC drag coefficient.

The peak heat flux for an FPA of -8.7° (worst case steep entry were determined using engineering code with Fay-Riddell formulation for convective heating and Sutton formulation for radiative heating on the

frontshield. For the back cover, the Huygens correlation [7] is applied. The following results were obtained:

- Frontshield ~ 17 MW/m^2
- Back cover ~ 1.5 MW/m^2
- Heat flux peak duration ~ 60s

The total energy was calculated to be a maximum of 330 MJ/m^2 at the stagnation point, with an average total energy of 250 MJ/m^2 due to the heat flux repartition at the surface of the frontshield.

The re-entry duration is approximately 1100 seconds. The following figure illustrates the convective and radiative contributions of the heat flux to the ERC.

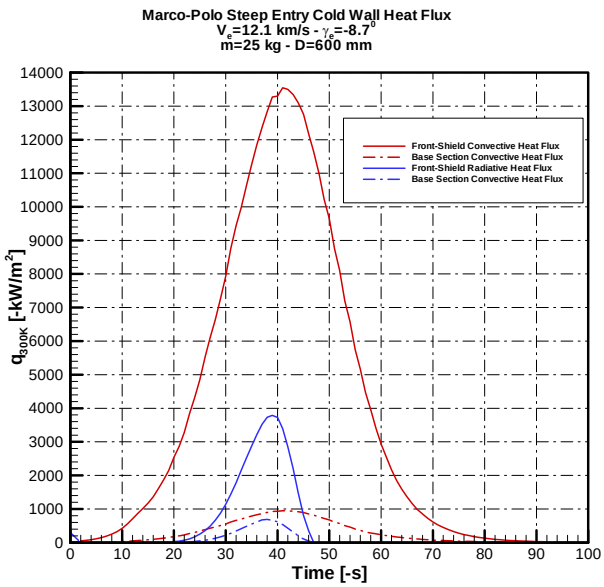

Fig. 17. Heat flux history in the boundary layer on front shield and back cover at maximum heat flux location.

6.2 Re-entry Stability Assessment

The stability of the selected aeroshape along the proposed trajectory was assessed, including static and dynamic assessments. It was assumed that the ERC wa jettisoned with a spin of 2 rpm (equivalent to the Hayabusa design), and a centring of 35%. The initial angle of attack was set at a conservative 9°. Fig. 18 below illustrates the total angle-of-attack time history. Note: the heat flux displayed here is not the sizing case, but a reference flux computed for nominal conditions according to the Sutton-Graves formulation.

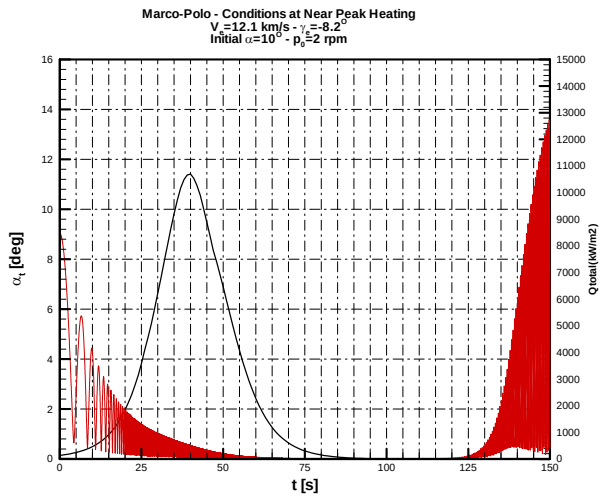

Fig. 18. ERC re-pointing and stability.

It can be seen that the ERC re-pointing occurs before the heat flux peak, at α_t < 2° near peak heating. The ERC is stable during the supersonic phase (M > 3). Fig. 19 below shows the "instability" when M < 1.4, with an angle-of-attack divergence of 18° amplitude at high subsonic. The divergence is due to dynamic instability of the capsule characterised by a pitch damping coefficient that is positive below Mach 3 due to the centre of gravity location towards the rear of the ERC.

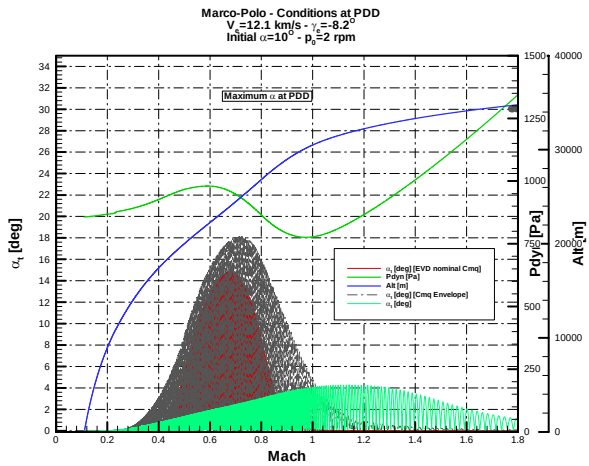

Fig. 19 Angle-of-attack divergence during transonic flow regime.

Due to this divergence, a supersonic deployment of a pilot chute may be necessary for stabilisation of the ERC, to allow a safe opening of the main chute at a low subsonic speed. It is also recommended that the centre of gravity of the ERC is moved forward by the addition of ballast in future work, if possible within the mass budget.

6.3 Descent Sequence

The aerodynamic stability and landing impact conditions drive the descent sequence. High ERC stability is required, but the rearwards centre of gravity makes this difficult to achieve – hence the recommendation for a supersonic pilot chute.

The vertical speed limit at impact is 5 m/s to minimise high shocks to the sample. This drives the parachute canopy size and type. The available planetary exploration parachute database was used to determine a preliminary parachute mass, with a 20% margin addition. Three parachute options were considered.

A single-stage disk-gap-band (DGB) parachute deployed at M = 1.4 results in large canopy size to ensure the impact speed limit is met. The DGB parachute has poor drag performance and the related dynamic pressure at deployment is high, resulting in a high parachute mass of 15 kg.

A two-stage parachute system includes a pilot/drogue chute that deploys at M = 1.4 to act as a decelerator and stabiliser. Although the dynamic pressure is still high here (1100 Pa), the size of this chute is small and the resulting mass is reduced. A second parachute is deployed at 3 km altitude at M < 0.1, corresponding to a dynamic pressure of 400 Pa. This is much smaller than the DGB due to better drag efficiency of the cross-canopy or tri-conical canopy design. This option is the most mass efficient, with a maximum descent system mass of 4 kg.

If the ERC stability was improved and consolidated, subsonic deployment could be considered as an alternative. This deployment would occur at 3 km altitude, corresponding to a dynamic pressure of 850 Pa., and the same canopy size as for the two-stage parachute system. However, the resulting mass is greater, at 9 kg, due to the higher dynamic pressure and the larger mortar system due to the ejection of a heavier parachute.

For the Marco Polo mission, the two-stage parachute system was selected as the baseline. A 0.8 m diameter DGB pilot chute is deployed during the subsonic regime phase, using a mortar. After a timed 500 s, the pilot chute would then pull off the back cover to extract the 5.3 m diameter subsonic parachute at 3 km altitude, to slow the ERC to the appropriate impact speed. An off-the-shelf parachute is expected to be used here, either cross-canopy (as in Hayabusa), or bi-or triconical (as in Stardust).

The main parachute is designed to deploy as late as possible to minimise the landing ellipse. The barking efficiency of the pilot chute is also maximised, as in Fig. 20 below. The front shield will not be jettisoned, to enable examination and testing after landing.

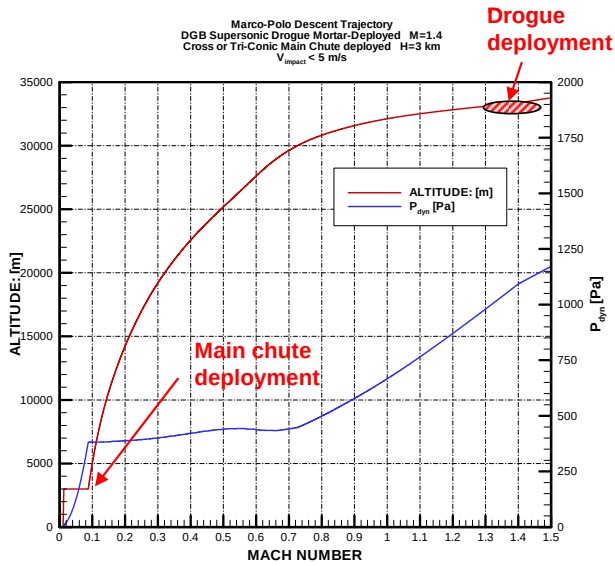

Fig. 20. Altitude, dynamic pressure and Mach for pilot and main chute deployment.

A preliminary sizing was made for the descent system, considering the Marco Polo ERC design and trajectory parameters:

- Pilot chute: 0.8 m diameter, 1.25 L volume.
- Main chute: 5.3 m diameter, 4.88 L volume.

This results in a total mass for the descent system of 4 kg, including the mortar and a 20% margin.

6. SUMMARY

The Marco Polo Assessment Study has resulted in an innovative and efficient mission design that has a launch margin of 13%. The design and analysis of the ERC has shown that a two-stage parachute descent is necessary for stability and impact load requirements. Such a descent would ensure the pristine asteroid sample is protected sufficiently to allow high quality science analysis.

7. REFERENCES

1. ESA, *Cosmic Vision: space science for Europe*, ESA report BR-247, 2005. http://www.esa.int/esapub/br/br247/br247.pdf
2. Barucci M. A., et al. Marco Polo: near earth object sample return mission, *Experimental Astronomy*, Vol. 23(3), 785-808, 2009.
3. Koschny D., et al. Marco Polo – a Mission to return a sample from a Near-Earth Object – science

requirements and operational scenarios, *Proceedings of the ISTS 2009 Conference*, Tsukaba, Japan, July 2009.
4. Tholen, D., Asteroid taxonomic classification, Asteroids II: Proceedings of the conference, Tucson, AZ, University of Arizona Press, 1989.
5. Starsem, *Soyuz Launch Vehicle Users Manual*, ST-GTD-SUM-01, Iss. 3, Rev. 0, 2001.
6. Racca G. D. and McNamara, P. W., The LISA Pathfinder mission, *Space Science Reviews*, Vol. 151, (1-3), 159-181, 2010.
7. Aerospatiale Les Mureaux, *Huygens Program Technical Report*, HUY-AS/m-120-TN-0010, August 1992.