Session IX: Sample Return Challenges

Overview of the Mars Sample Return Earth Entry Vehicle

Robert A. Dillman
NASA Langley Research Center
Hampton, VA
757-864-7177
robert.a.dillman@nasa.gov

6th International Planetary Probe Workshop
Georgia Institute of Technology
Atlanta, GA
23-27 June 2008

Introduction

- Goal of Mars Sample Return (MSR): Bring surface and atmosphere samples from Mars back to Earth for detailed study.

- Langley's MSR Earth Entry Vehicle (EEV) protects the sample container from reentry heating and deceleration loads during entry, descent, and landing.

- Basic EEV design developed 1998-2001 for the 2003/05 MSR Project.
- Project cancelled in 2001; technology development through 2004.
- 2004 plans called for suborbital EEV system validation flight test in 2010 and MSR launch in 2013.
- New study starting at JPL and Langley evaluating EEV flight test in 2015 and MSR launch in 2018.

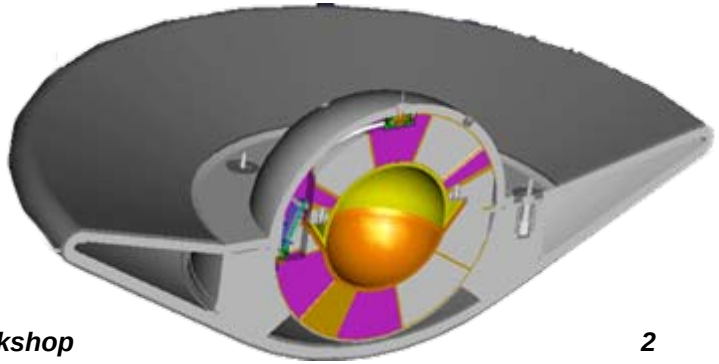

Mission Scenario

- Mars lander seals samples into container
- Mars ascent vehicle puts container into orbit
- Spacecraft retrieves container, inserts it into EEV
- Spacecraft flies past Earth, releasing EEV on intercept trajectory
- EEV taken to sample handling facility

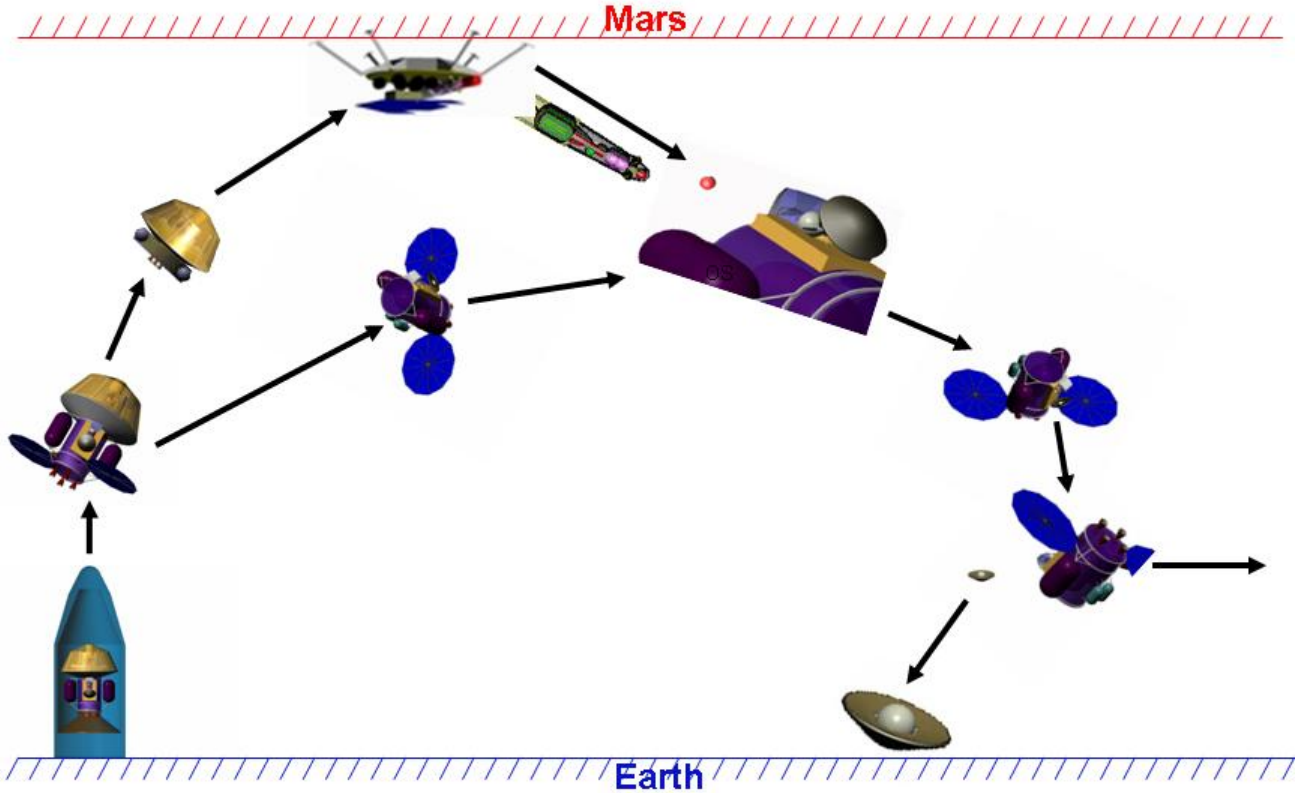

Reliability

- Mission and EEV design driven by containment assurance.
- For 2003/05 MSR, NASA Planetary Protection Officer established a draft mission requirement of 10^{-6} probability of releasing ≥0.2 micron particle into Earth's biosphere.
- Required higher reliability than any other planetary entry vehicle.
- Probabilistic Risk Assessment used to quantify risk based on failure rates of spacecraft components and hardware.
- Achieved high reliability through heritage and elimination of most active systems from EEV.
  - TPS selected for high heritage rather than low mass.
  - No on-board attitude control; spin-stabilized on ballistic trajectory. EEV aerodynamics act as a passive backup to ensure entry orientation. Preliminary simulations showed that the vehicle will reorient to nose-forward in hypersonic regime, before the entry heat pulse, even if spin-stabilized 180° backwards.
  - No parachute; designed for terminal velocity landing.

Design Description

Langley Research Center

- Axi-symmetric 0.9m diameter, 60° blunt body, 44kg at Earth entry
- 0.5kg samples inside 16cm diameter sample container
- Layered protection: Sealed metal sample container, inside sealed flexible containment vessel, inside crushable energy absorber
- Aft side concave; hemispherical lid latches closed after sample insertion.
- Structure provides large drag area to passively slow terminal descent.
- 11.56km/s entry speed for 2003/05 mission; -25° flight path angle; 1500W/cm^2 peak heat flux; 130G atmospheric deceleration

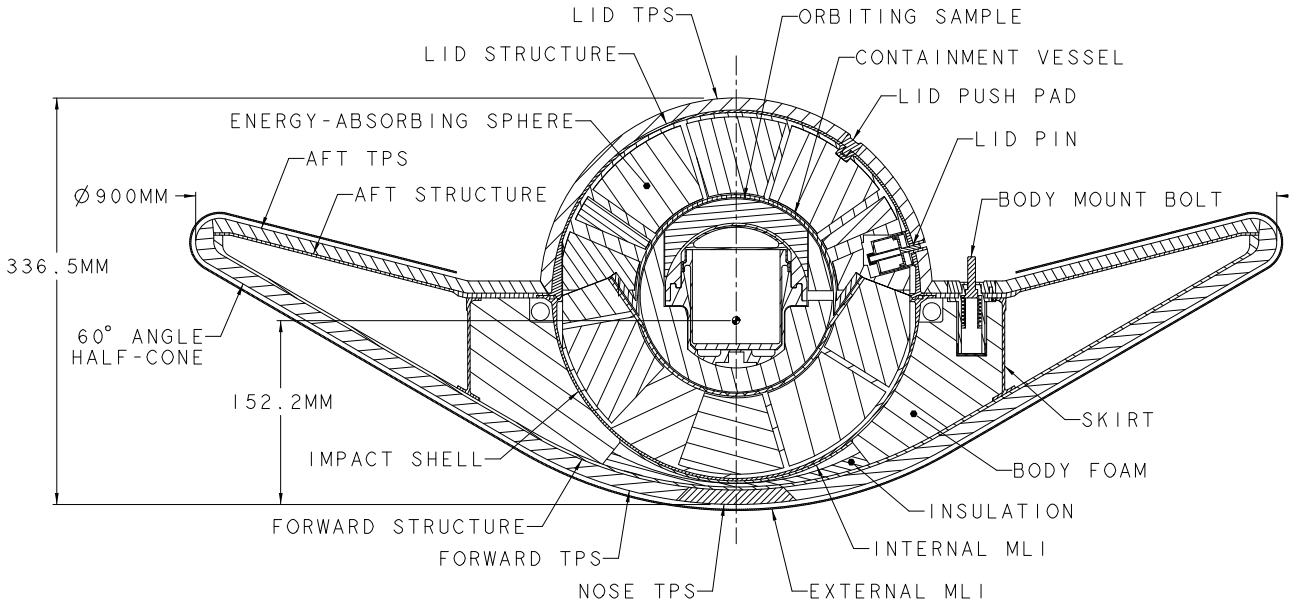

Thermal Protection

- Thermal protection system (TPS) development led by NASA Ames.
- Reliability requirement led to choice of Fully Dense Carbon Phenolic (CP) as forward TPS material based on extensive flight heritage.
  - Thousands of tests, hundreds of flights across range of environments
  - Missile heat shields, solid rocket nozzle throats, Pioneer Venus, Galileo
  - Well-characterized material with known performance
- Two types of CP TPS on EEV: Tape-wrapped CP on body of vehicle, chopped-molded CP on nose due to geometry.
  - Samples of both passed arc-jet testing at NASA Ames

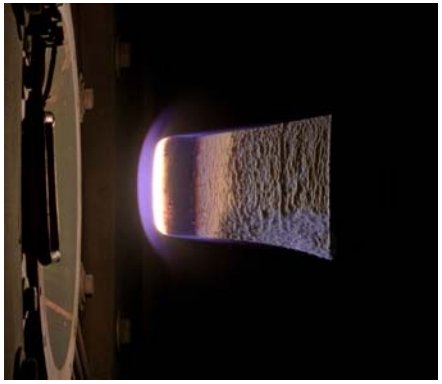

- 12mm of CP for 2003/05 MSR: 1/3 of EEV mass.
- Modern low-density TPS can produce lower mass shield, but lack the required extensive flight heritage.

- Aft TPS material yet to be selected. 10mm of SLA-561V used for vehicle mass properties calculations.

Micrometeoroid Shield

- Micrometeoroid analysis and shield design work led by JPL.
- Due to reliability requirement, need micrometeoroid shield to protect TPS from damage during round trip to Mars.
- Ground test facilities can't duplicate the combined reentry air flows and heating conditions well enough to reliably prove that damaged TPS won't fail during Earth entry and release Mars samples.
- Unfortunately, shield large enough to provide complete protection is prohibitively large and massive.
- Alternative approach developed:
  - Shield to level acceptable for mission success
  - Add sensors to detect breach of shield, and abort mission if breached
  - Shield must still be large enough to provide highly reliable protection for time between EEV release from spacecraft and Earth interface, when can no longer abort the mission
- To avoid interfering with TPS performance, MM shield must separate cleanly from EEV before entry heat pulse. One notional approach is to stitch wedge-shaped shield segments to each other with low-melt-point thread, so shield comes off early in entry before TPS ablation begins.

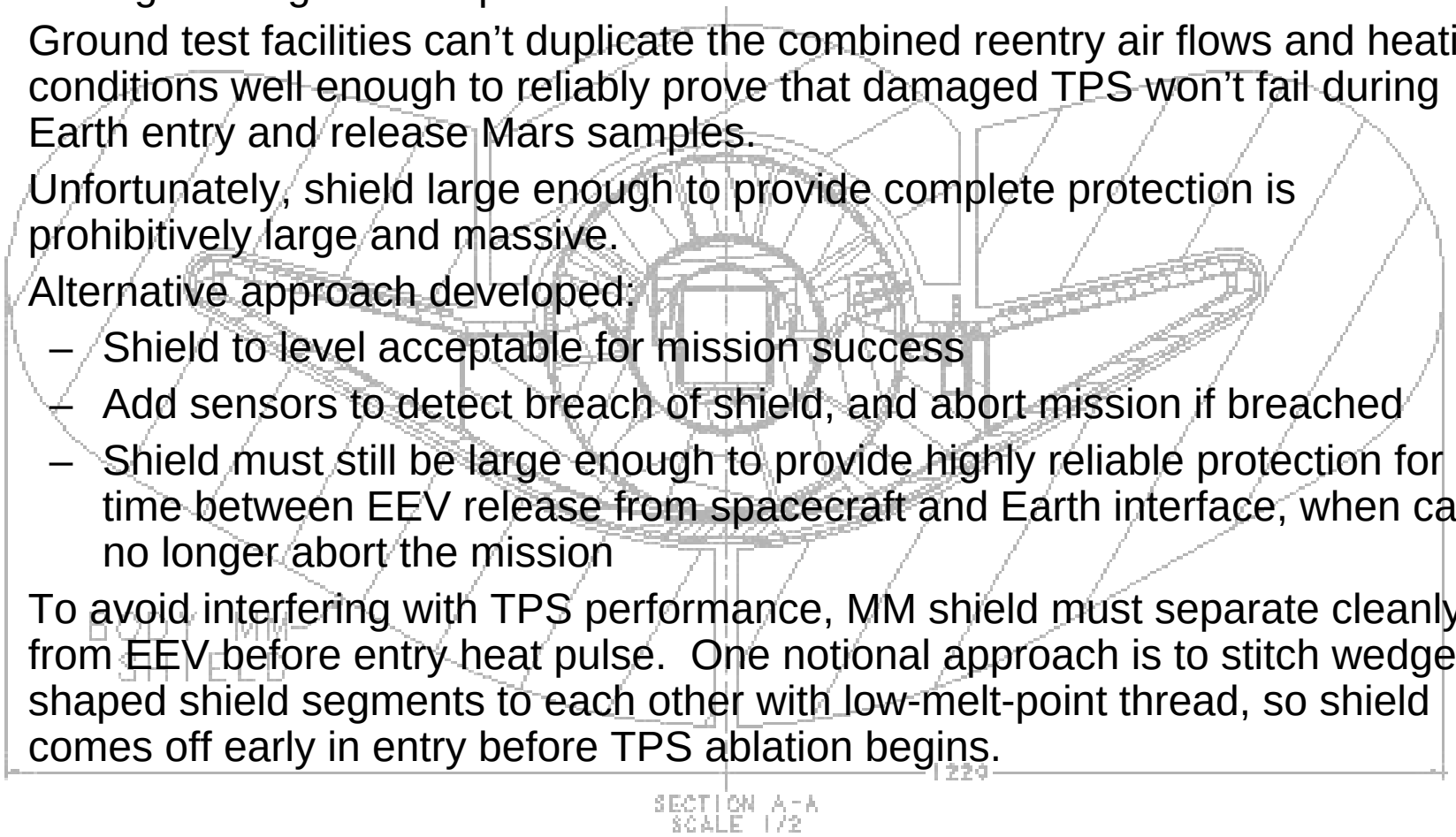

EEV Landing

Langley Research Center

- Nominal: Terminal velocity (41m/s) impact on soft terrain
- Ground tests at Utah Test and Training Range show that soft terrain cushions landing loads well below the 2500G level for preservation of science value of samples.
- Hard-surface landing: Crushable energy absorber protects sample container to 3500G level.
  - Cellular structure, of resin-impregnated Kevlar and carbon walls, braced by carbon foam to prevent buckling. Walls deform and tear to absorb energy.
- Full-velocity tests onto concrete at Langley's Landing and Impact Research Facility proved landing loads below 3500G level, and were used to correlate non-linear finite element models and simulations across range of impact conditions.

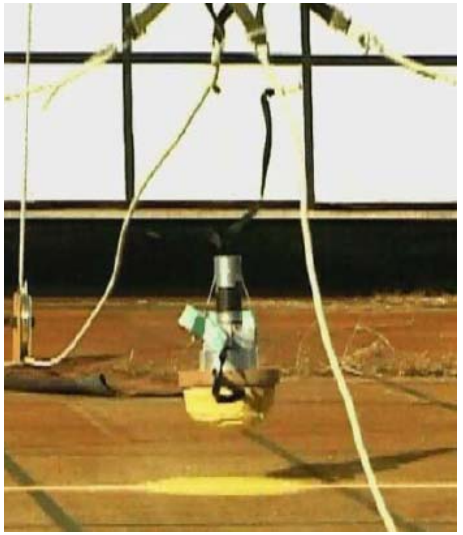

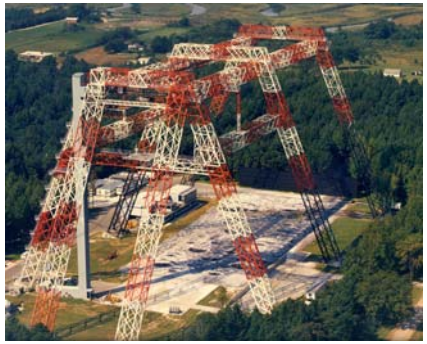

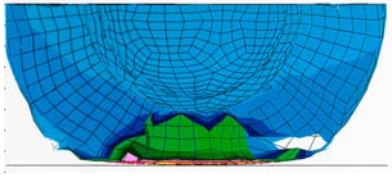

Remaining Development (1 of 2)

- Maturing the MSR EEV to a flight-ready condition requires work in multiple areas, all of which interact due to the integrated design.
- Aft body geometry and TPS
  - Fwd surface >2000°C; aft surface <500°C
  - Previous risk mitigation studies identified possible shape changes to increase aft heating and sterilize any Mars dust on outside of EEV.
  - Detailed thermal analysis requires selection of aft TPS, which first needs heritage study.
  - New shape must also maintain aerodynamic reorientation capability

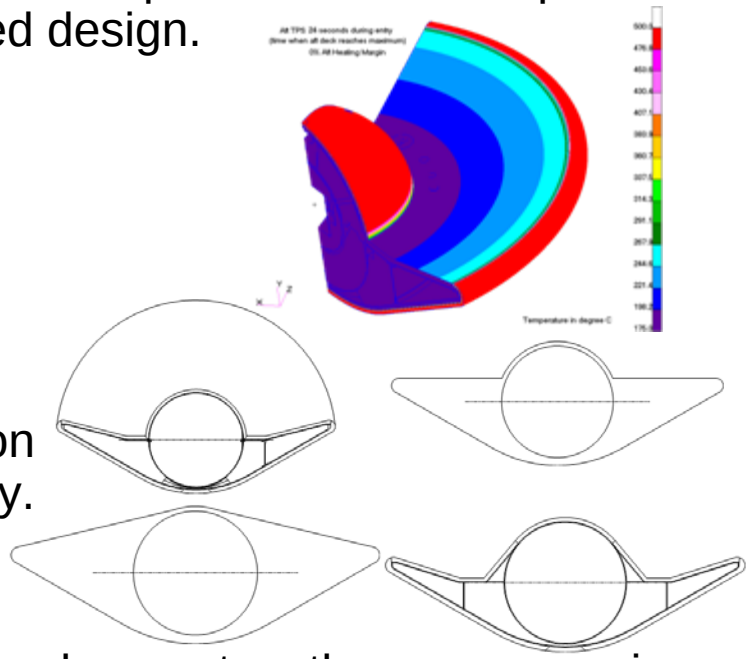

- Chopped-molded CP TPS needs additional development as there are gaps in documentation of heritage fabrication techniques. Must also finalize joint designs between types of TPS, as well as design of penetrations for cabling to control the lid latches and seal the containment vessel. All will need arc-jet testing for verification.

Remaining Development (2 of 2)

- Micrometeoroid shield design needs to be matured to flight level. Need mission trade study to investigate whether period between EEV release from spacecraft and Earth entry can be shortened enough to remove need for shielding during this period, which would simplify shield development.
- Impact absorber design relatively mature, but needs update to match new sample container size and mass. Need to finalize design using flight-qualified materials, which weren't part of earlier ground tests. Need to define interface details to containment vessel, sample container, and lid latches.
- Overall EEV structural and mechanical design needs to be matured to flight level, with detailed design of structural components, lid latches, and interfaces to parent spacecraft. The independent components must be shown to work together toward 10^{-6} containment requirement.
- General update of requirements, including those for system validation flight test, to match new mission parameters.

Conclusions

- The Earth Entry Vehicle design for a future Mars Sample Return mission is expected to follow the EEV concept baselined for the 2003/05 mission.
- Longevity of the design indicates the robustness of the approach, where aerodynamic performance, heritage materials, and passive impact attenuation form the basis of meeting the 10^{-6} sample containment requirement.
- EEV design was matured by technology development through 2004, but additional development efforts culminating in the full-scale EEV system validation flight test are needed for flight readiness.
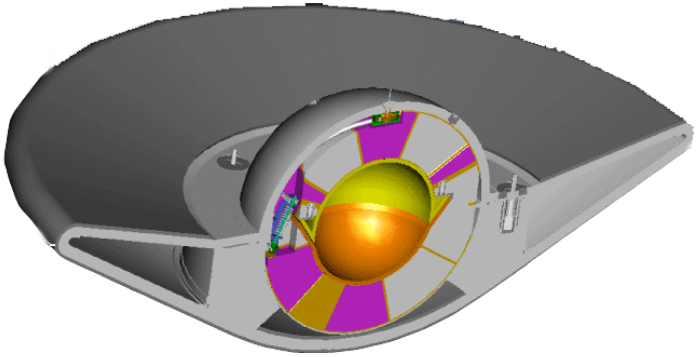
- Questions?