Overview of the Hypersonic Inflatable Aerodynamic Decelerator Large-Article Ground Test Campaign

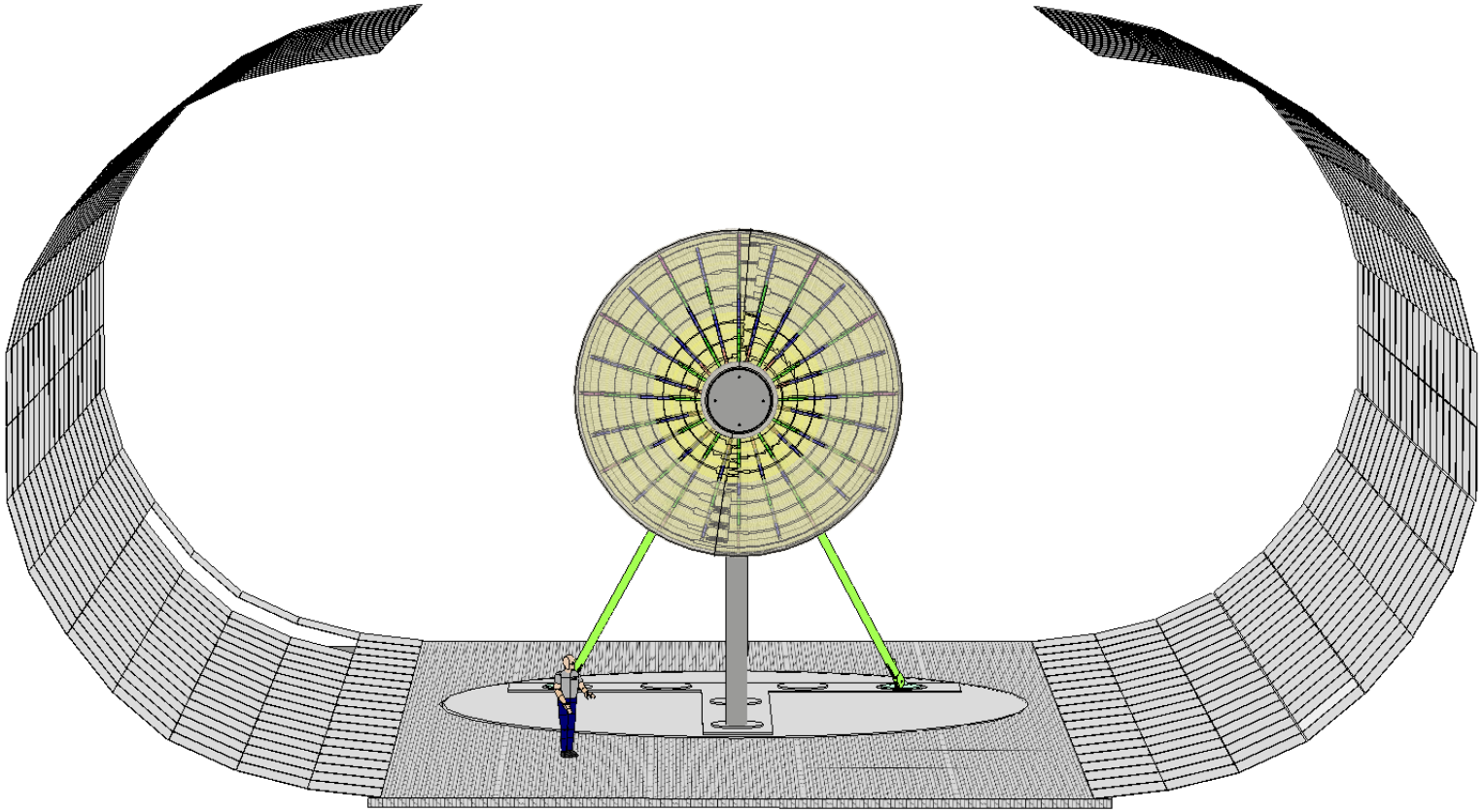

Alan M. Cassell, Gregory T. Swanson (NASA Ames Research Center, TSS, ERC Inc.)
R. K. Johnson, Stephen J. Hughes, F. M. Cheatwood (NASA Langley Research Center)

Outline

- Motivation
  - -HIAD Inflatable Aeroshell Development
  - -Design Reference Mission
- Test Design
  - -Objectives
  - -Facility Envelope
  - -NFAC Structural Analysis
- Test Article Design
- Instrumentation
- Photogrammetry
- Modeling and Simulation

Inflatable Aeroshell Structures Development

Large-Scale Manufacturability & Material Development

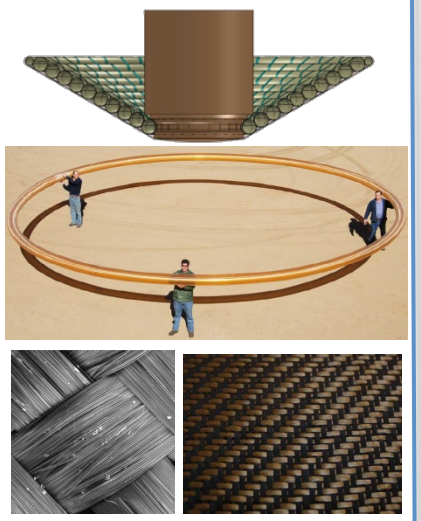

Development of large-scale manufacturing capabilities and advanced, high-temperature capable inflatable structure materials.

Large-Scale Static Load Testing & Model Development

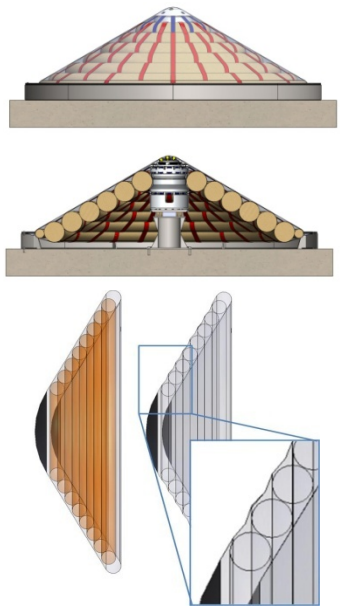

Ground test to demonstrate HIAD scalability and initial structural model development.

Large-Scale Wind Tunnel Testing & Instrumentation Development

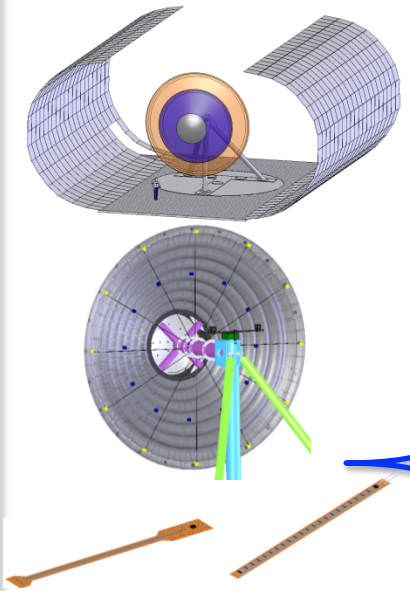

Ground test to characterize HIAD performance under flight-like aerodynamic loading.

3 – 15-meter HIAD Class

Mars robotic (SMD & ESMD)

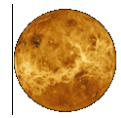

Venus missions (SMD)

LEO/ISS missions (SMD & SOMD)

NEO return-robotic (SMD & ESMD)

Lunar return-robotic (SMD & ESMD)

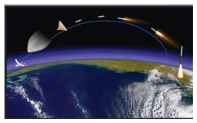

Terrestrial robotic missions (DoD)

Technology development & risk reduction for Human Mars missions (ESMD)

Design Reference Mission- HEART

High **E**nergy **A**erodynamic **R**eentry **T**est

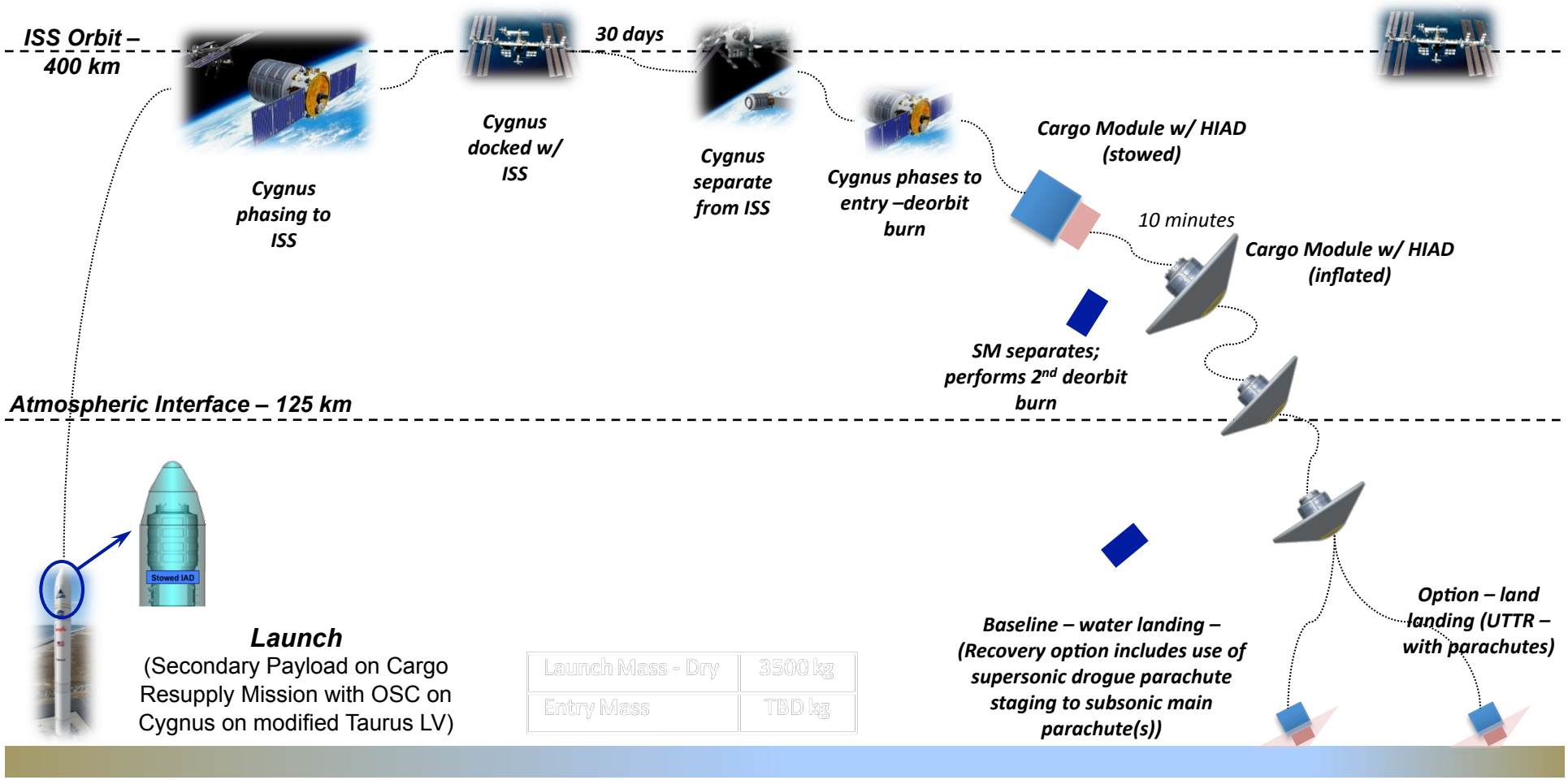

Launch Mass - Dry	3500 kg
Entry Mass	TBD kg

Design Reference Mission- HEART

Requirements	
Orbit Inclination	51.6 deg
Recovery Site	California Coast
Entry	Ballistic
Descent	Subsonic Parachute

Assumptions	
Base Diameter	8.3 m
Nose Radius	1.5 m
Corner Radius	0.1 m
HIAD Geometry	60 deg sphere cone
Entry Mass	3600 kg
Gamma	- 1, -2 deg
Inertial Entry Velocity	7.6 km/sec

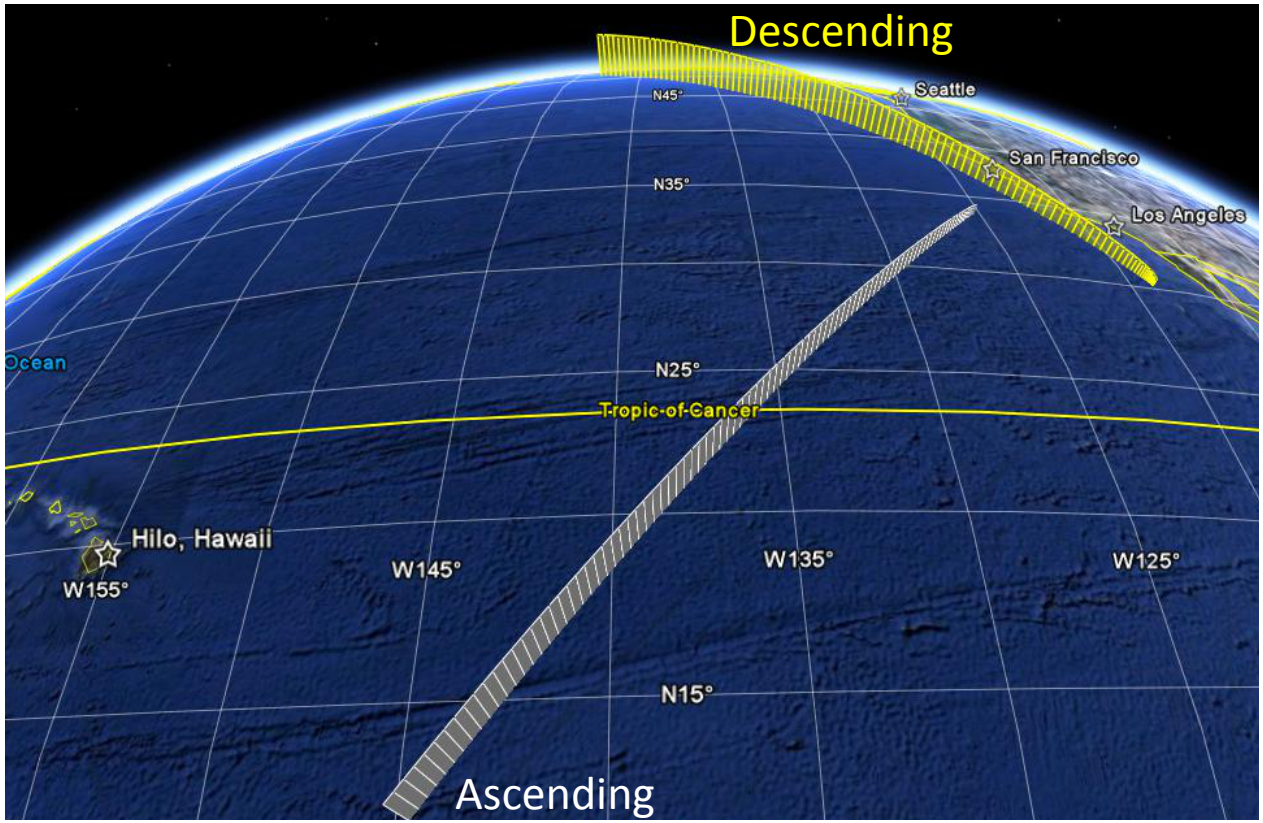

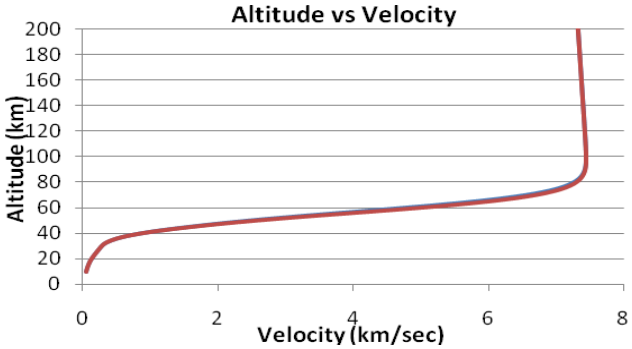

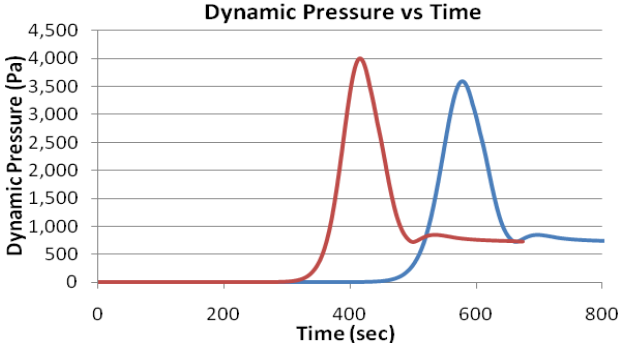

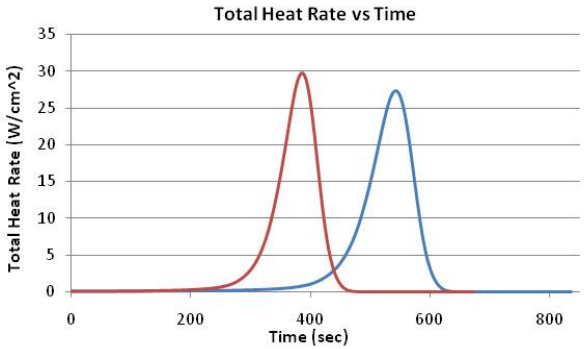

NFAC Wind Tunnel Test Objectives

Primary Objectives:

• **Demonstrate the 3.0 m diameter IRVE-3 EDU response to changes in dynamic pressure and angle of attack** over the range of expected IRVE-3 flight conditions in order to correlate response to structural simulation model.

• **Characterize the 6.0 and 8.3 m diameter HIAD aeroelastic response** to changes in dynamic pressure and AoA over the range of expected flight conditions for a representative LEO reentry demonstration mission. The 6.0 m test model response will be correlated to the structural simulation model.

Secondary Objectives:

• **Determine if there is a minimum inflation pressure** needed to maintain structural stiffness and stability over the dynamic pressure and angle of attack conditions.

• **Characterize the stiffness of the interface of the inflatable structure to the rigid centerbody** for a range of internal pressure versus dynamic pressure and centerbody angle of attack.

• **Measure hysteresis of HIAD deformation** when increasing and then decreasing angle of attack.

• Evaluate **HIAD response to torus loss of pressure**.

• Evaluate **Developmental Instrumentation** performance.

NFAC Test Design

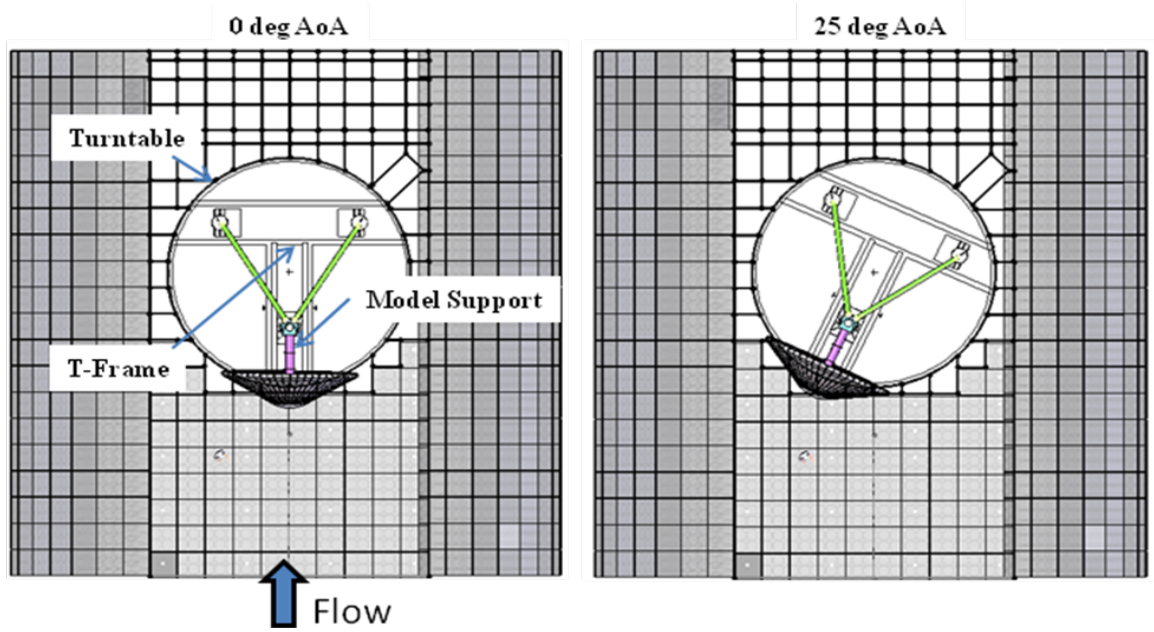

Test Conditions

- Dynamic Pressure: 1-12 kPa (25- 250 psf)
- Inflation Pressure: 5 - 15 psig
- Angle of Attack: +/- 25 degrees
- Off-Nominal Conditions: Inflation pressure variations, Failure modes, Decreasing number/size straps

Instrumentation

- Surface Pressure, tori pressure
- Inflatable deformation & deflection using Photogrammetry
- Strain gages/bend sensors (developmental)
- Wireless Data Acquisition Systems

NFAC 40 x 80 Structural Considerations

Objectives & Requirements

- Determine operational capability with current NFAC facility configuration. No major modifications.
- Utilize existing scale system, do not bypass.
- Analyze tunnel structure with 8.3 m HIAD to load achievable within known facility structural limits.

Findings

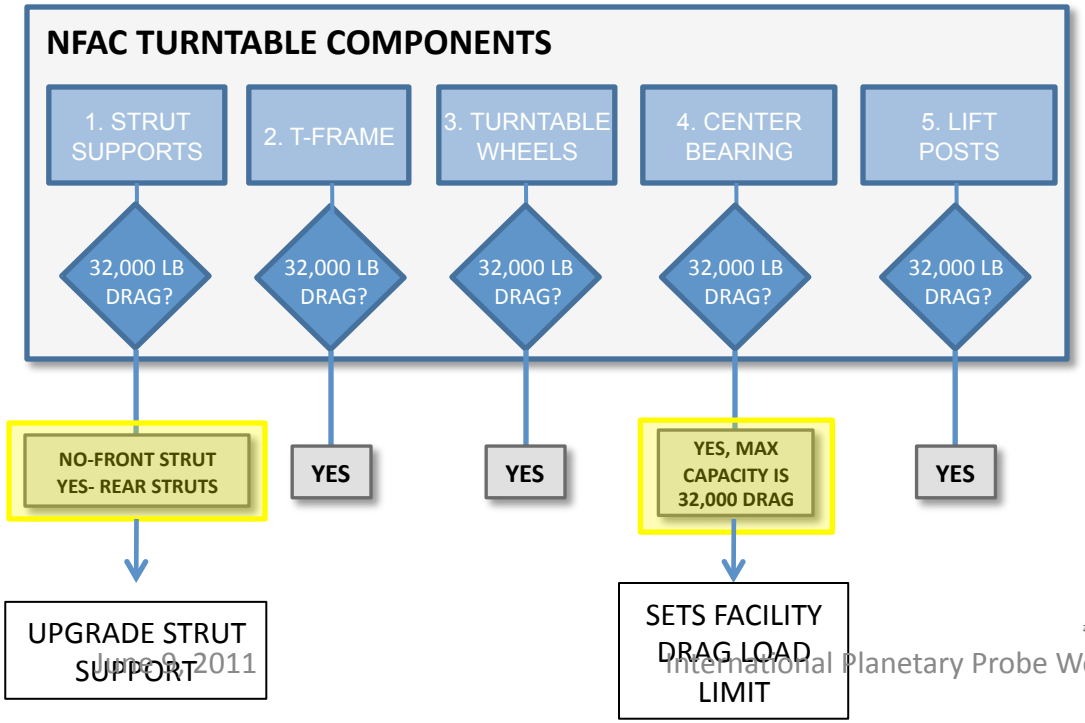

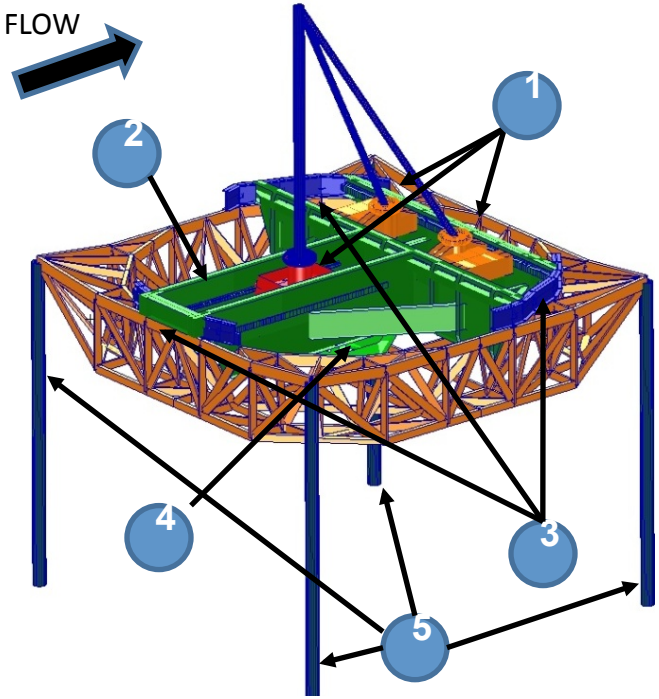

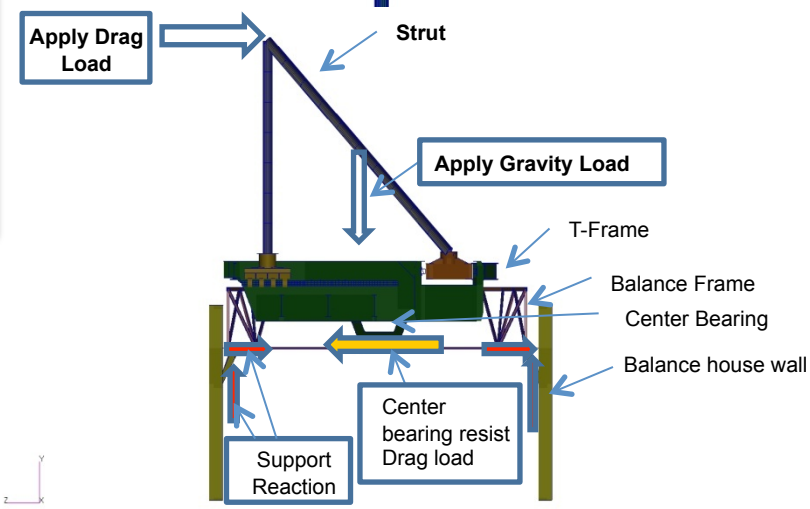

NFAC Test Envelope

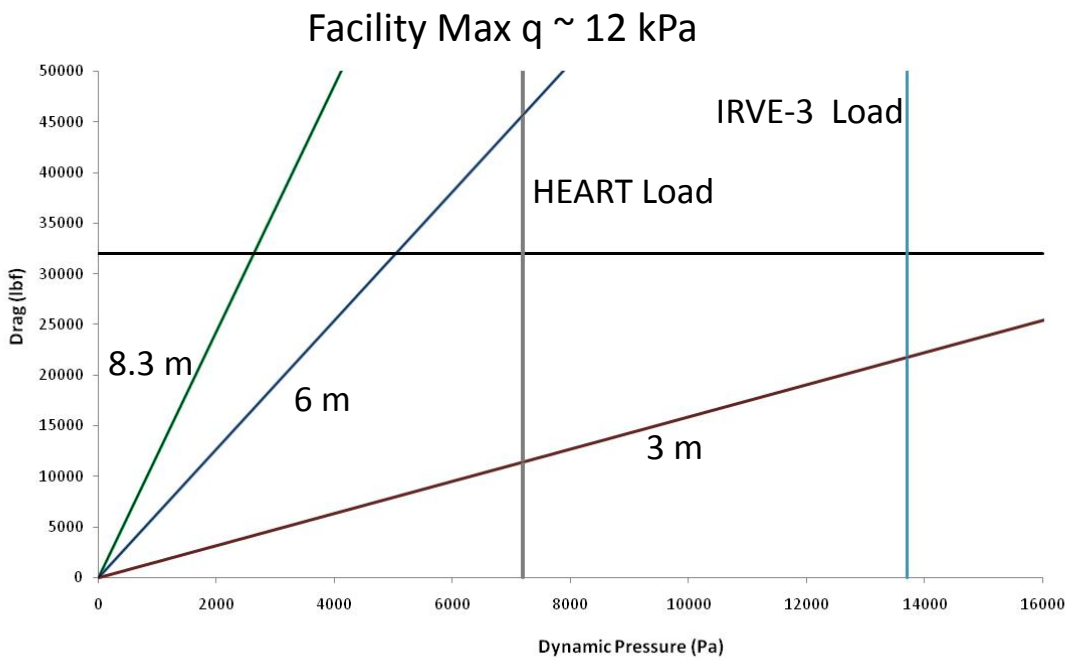

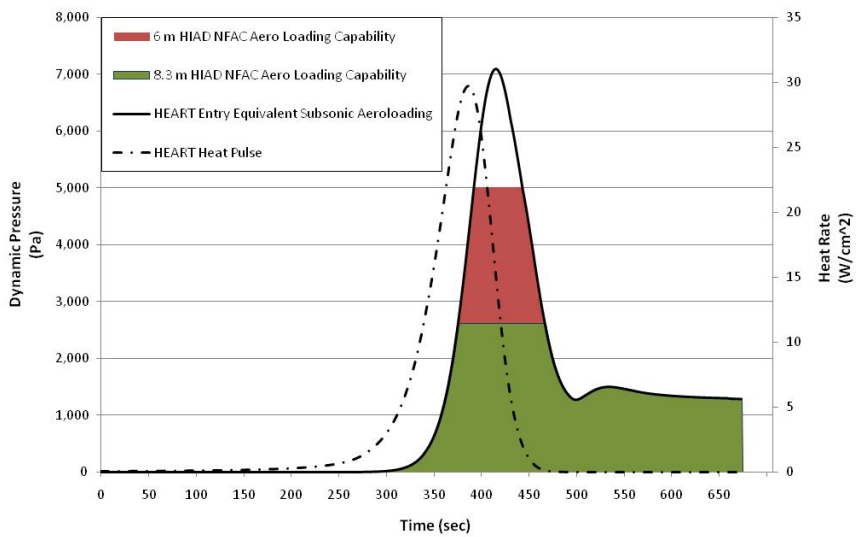

Blockage %

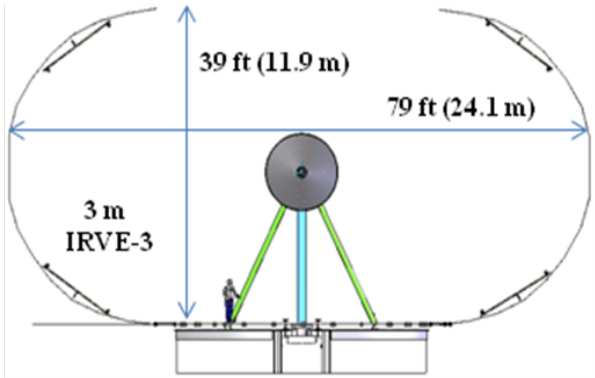

2.8 %

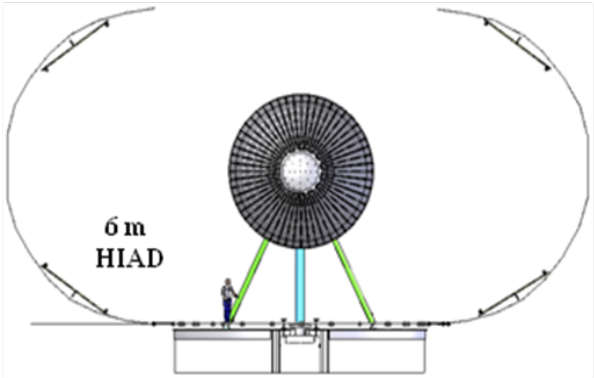

11.0 %

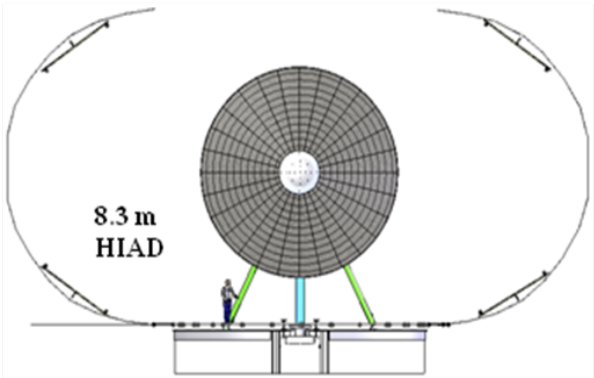

21.1 %

HIAD Test Articles and Support Hardware

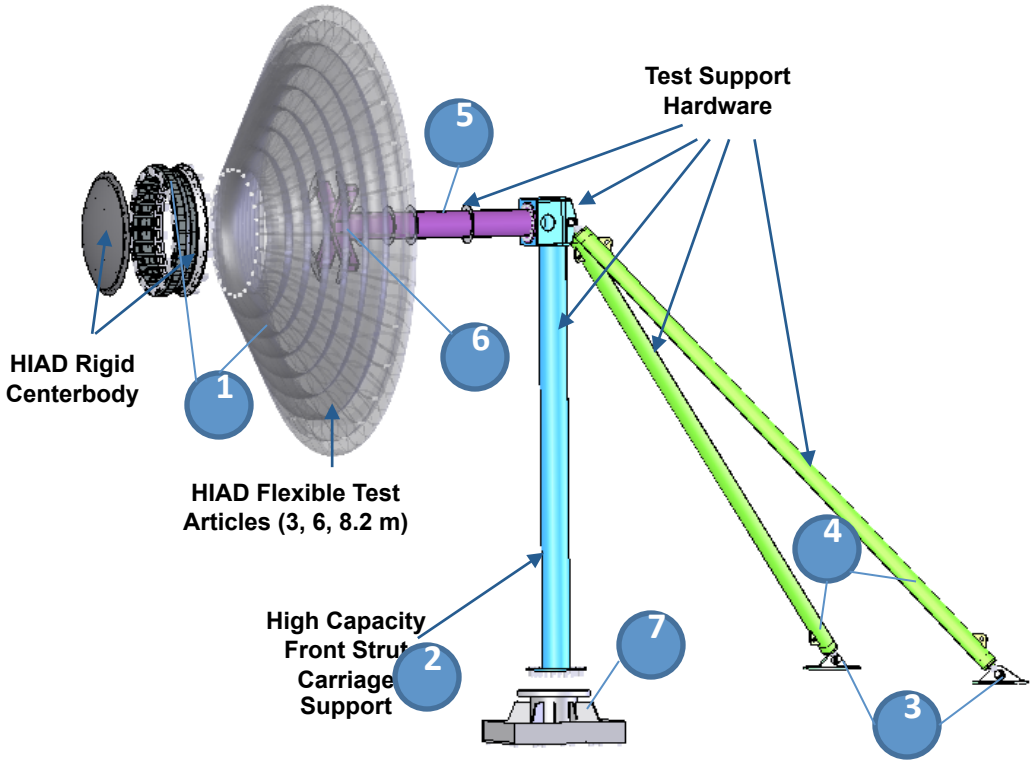

Item #	Part description	Qty	unit mass (lbm)	total mass (lbm)
1	HIAD model*	1	1,415	1,415
2	Front strut	1	1,117	1,117
3	rear strut lower plates	2	203	406
4	rear strut	2	811	1,622
5	sting	1	3,821	3,821
6	HIAD model interface	4	16	64
	total model and support mass			8,445
7	tail strut carriage	1		4,211

Inflation System

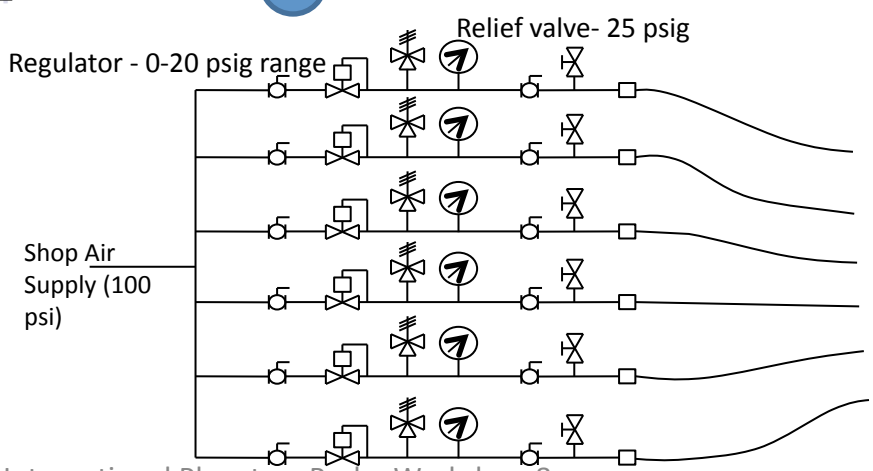

HIAD Test Articles- Inflatable Design

- 6 m (7 structural tori plus 1 shoulder radius torus)
- 8.3 m (11 structural tori plus 1 shoulder radius torus)
- 3 m has similar design, but smaller structural and shoulder tori
- 13.6 inch nominal (as-braided) torus section diameter
- 32,000 lbf. maximum axial load with a design factor of 3 on all textile components

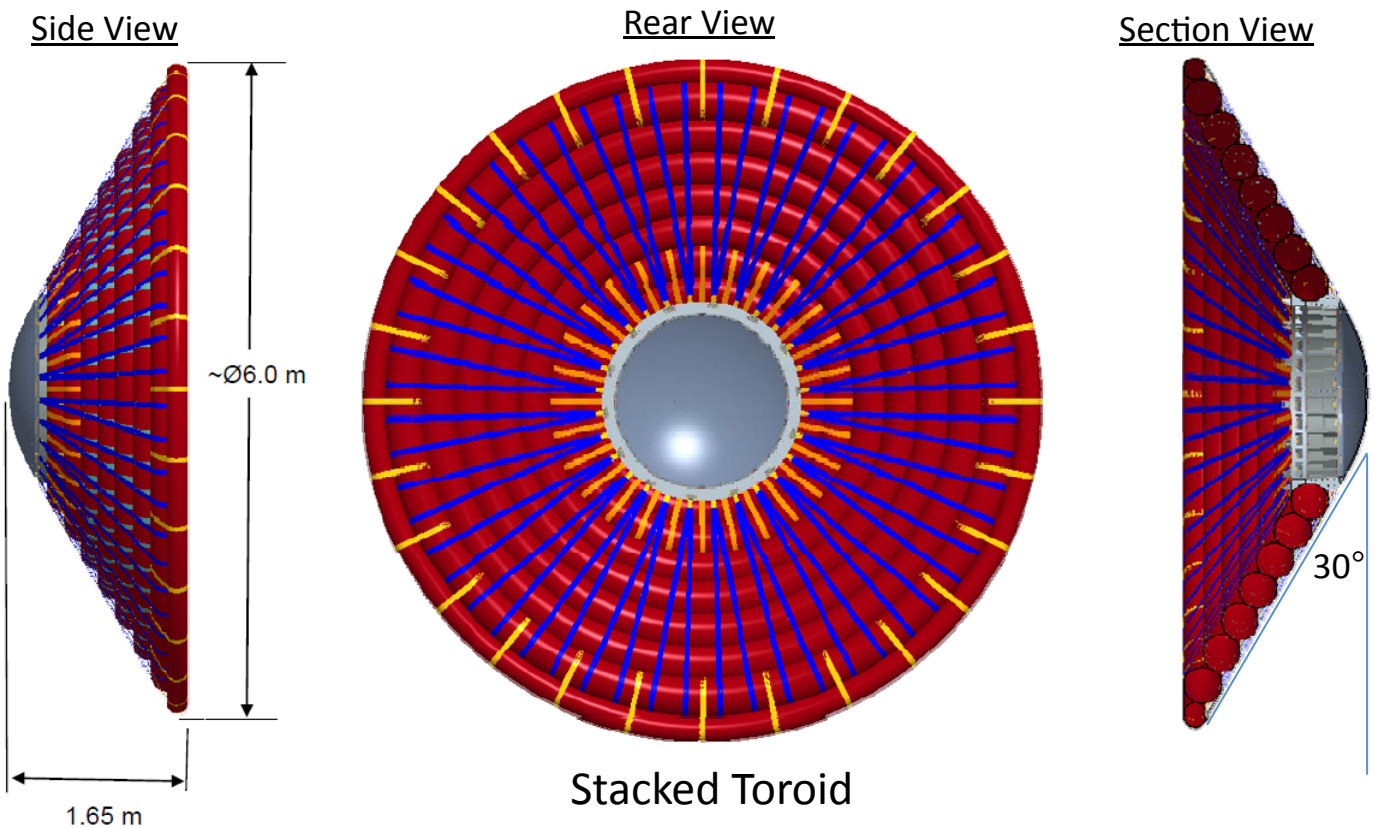

Center-Body Assembly

- Center-body consists of 3 main components
  - Aluminum nose cone
  - Aluminum forward ring frame
  - Aluminum toroid interface ring

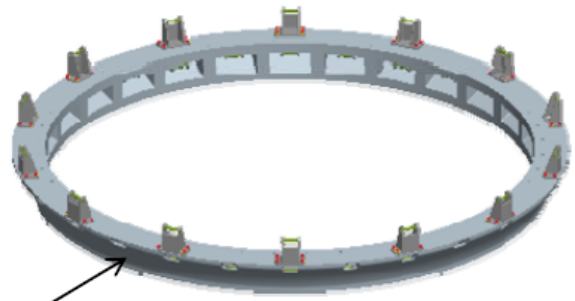

Toroid Ring

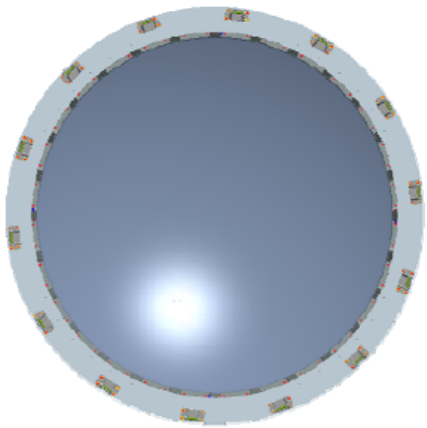

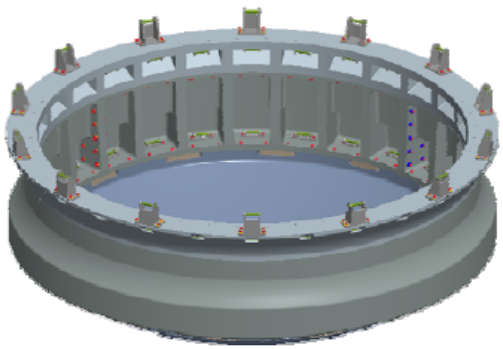

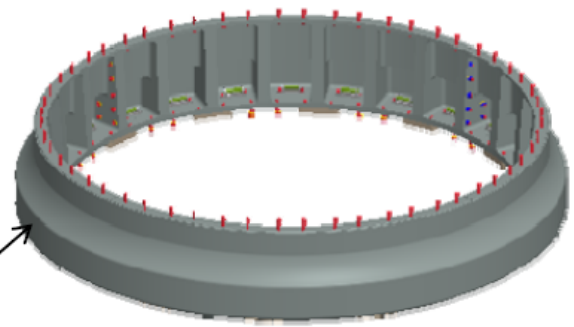

Fwd Ring Frame

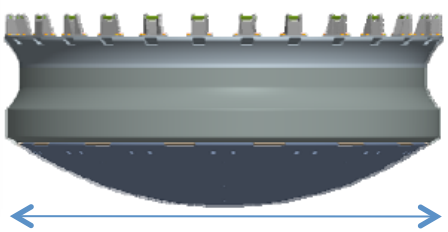

1.7 m diameter

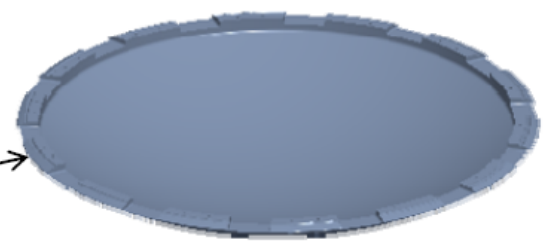

Nose Cone

Center-Body Interface to Inflatable

- Inflatable is mounted to center-body at 28 primary locations with 2 attachments at each location
  - Each strap is wrapped/stitched around torus 1 and each end interfaces a strap mount bracket assembly via a clevis type pin

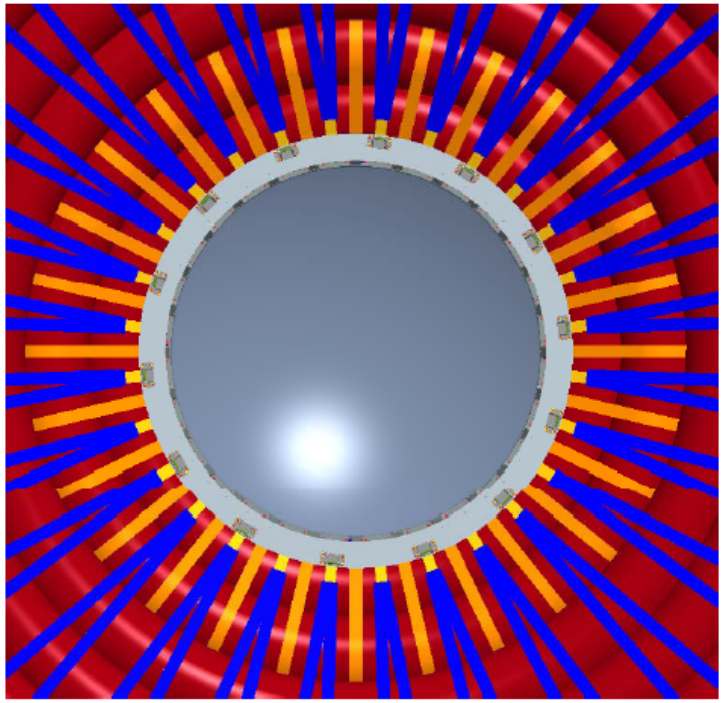

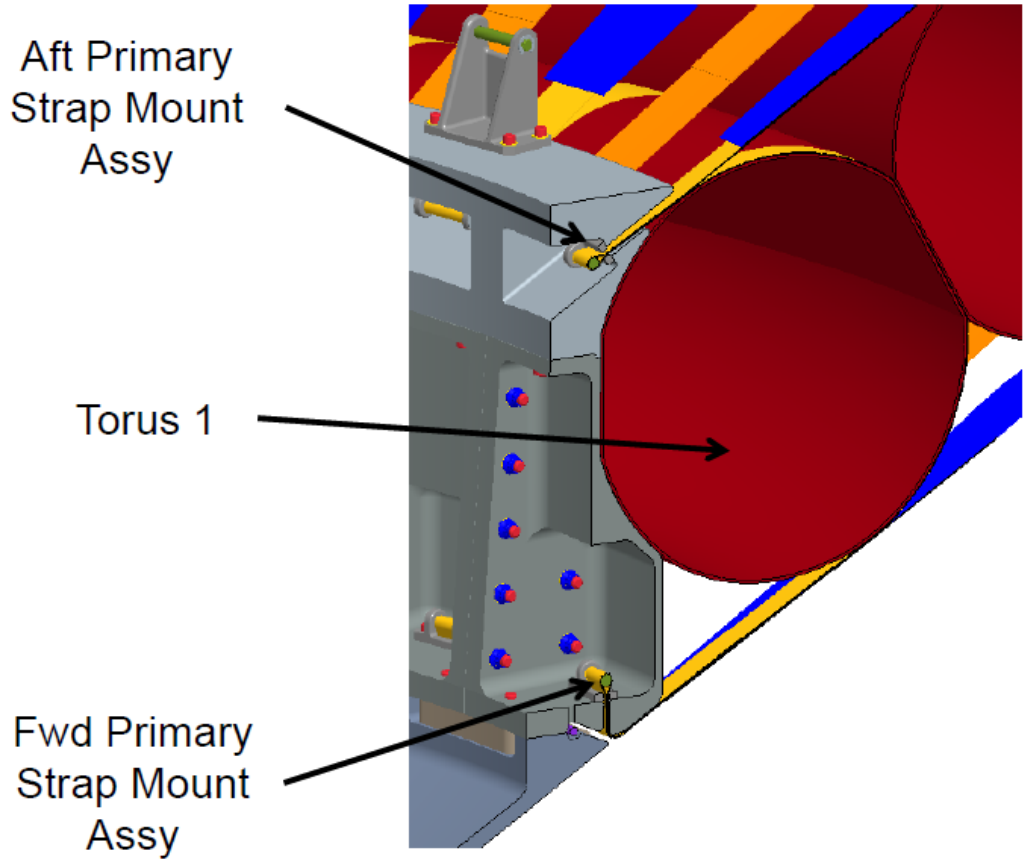

Aero Cover

- 28-gore conic fabric structure
- Made using RF-weldable shelter material
  - White vinyl coated polyester fabric
  - .0165 thick

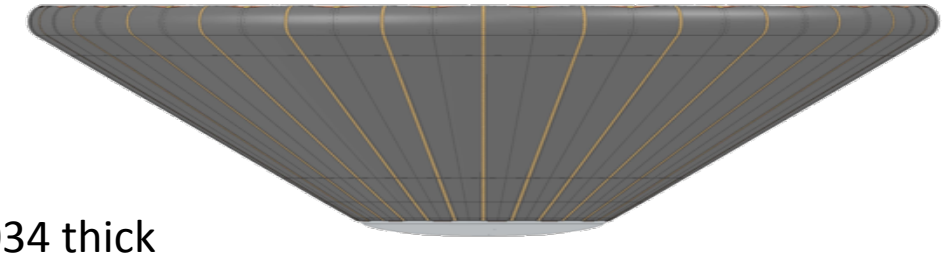

- RF weld with 2” overlap
  - Welded material (2 plies) is .030 to .034 thick
  - Excellent adhesion, attempts to pull apart delaminate material
- Stitch Kevlar Tape radials in place
  - 1” wide 4,000 lb PIA-T-87130 Type VI Class 8 for samples
  - .088 to .103 total thickness after sewing
  - Aero Cover would use 1” wide 1,500 lb Type VI Class 5
    - .005 to .010 thinner
- Outer attachment provides tension adjustment and control via tensioned catenaries.
- Inner attachment via clamped ring

Aero-Cover Top and Side Views

- Centerbody interface via metal ring clamped at 14 places.
- Straps attach to ring outside of clamps
- Clamps grip ring and two layers of fabric.

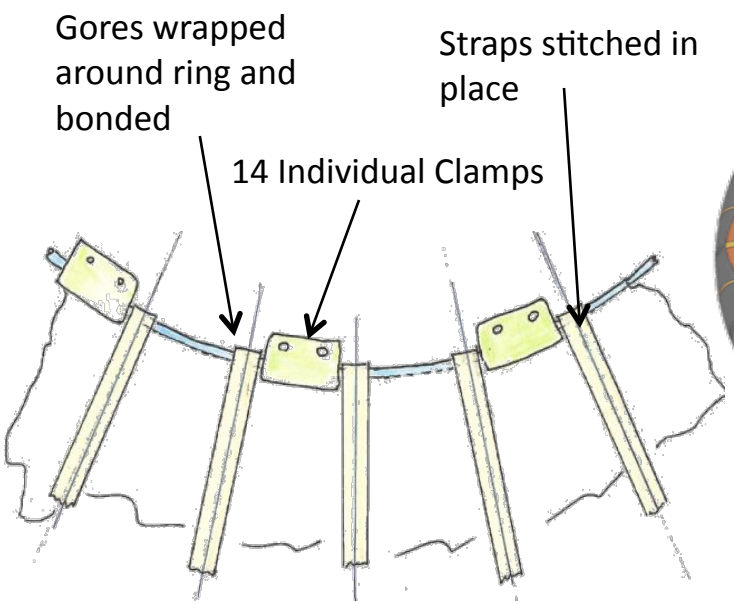

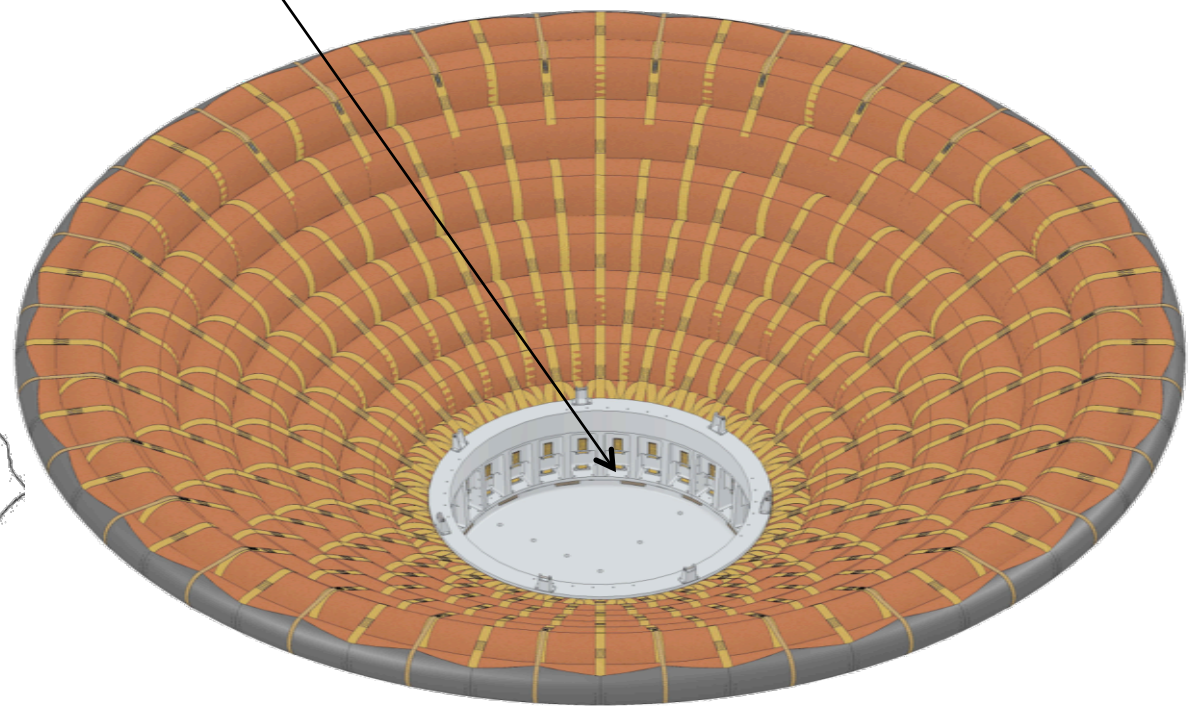

NFAC Facility Instrumentation

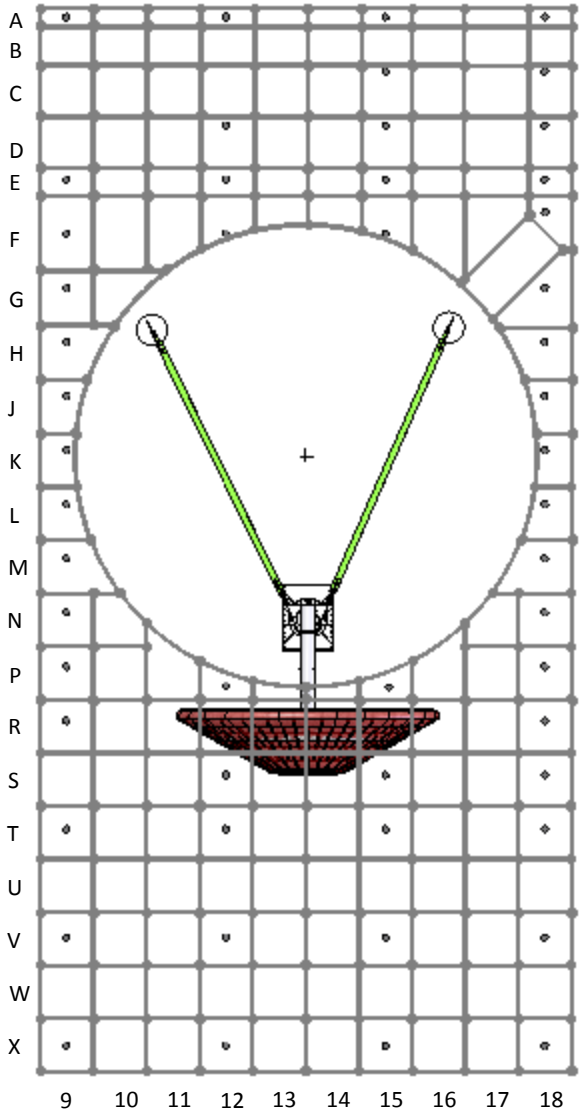

Tunnel Static Pressure Ports

- 24 static pressure measurements located in two circumferential patterns will be taken upstream of the model to indicate the air flow quality generated by the NFAC.

- 177 ports – downstream of model and in tunnel walls will also be monitored

- Measurements are taken by the **NetScanner System 9116** by **Measurement Specialties**

Six High-Definition Video Cameras

High-Definition Still Cameras

Instrumentation- Nose Cap Static Pressure

- A total of 29 pressure taps, concentrated at the periphery (16 total), with concentric pattern of 8, 4 and 1 tap at the center.
- Outer Periphery taps to be mounted on spherical portion before transition to conical section
- Each tap should be normal to the outer surface of the rigid nose cone

Front View

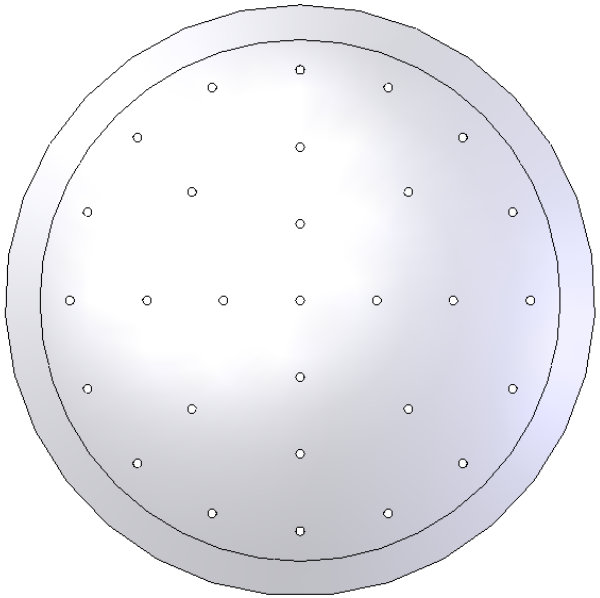

16, 8, 4, 1 Layout

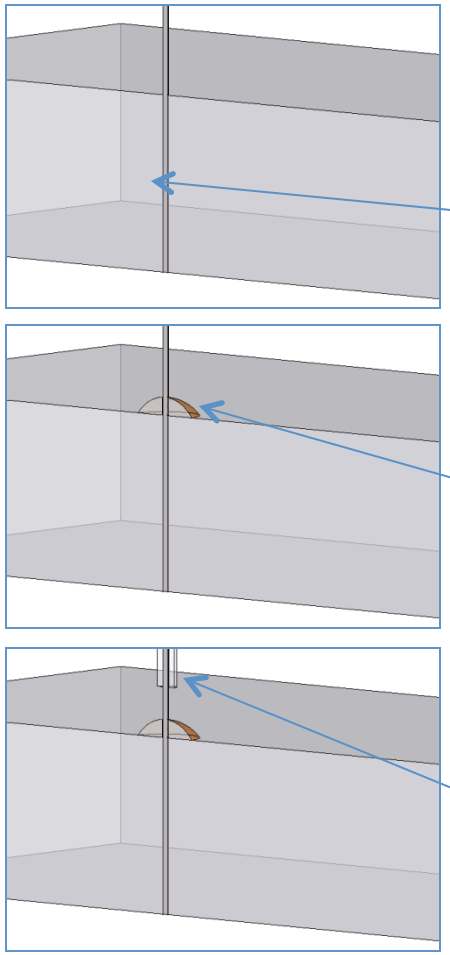

~0.042" diameter drill and ream normal to surface.

Press fit 0.040" OD SS tubing

Epoxy tubing from backside

Connect plastic tubing from facility pressure scanner

Instrumentation- Inflatable Aeroshell Static Pressure

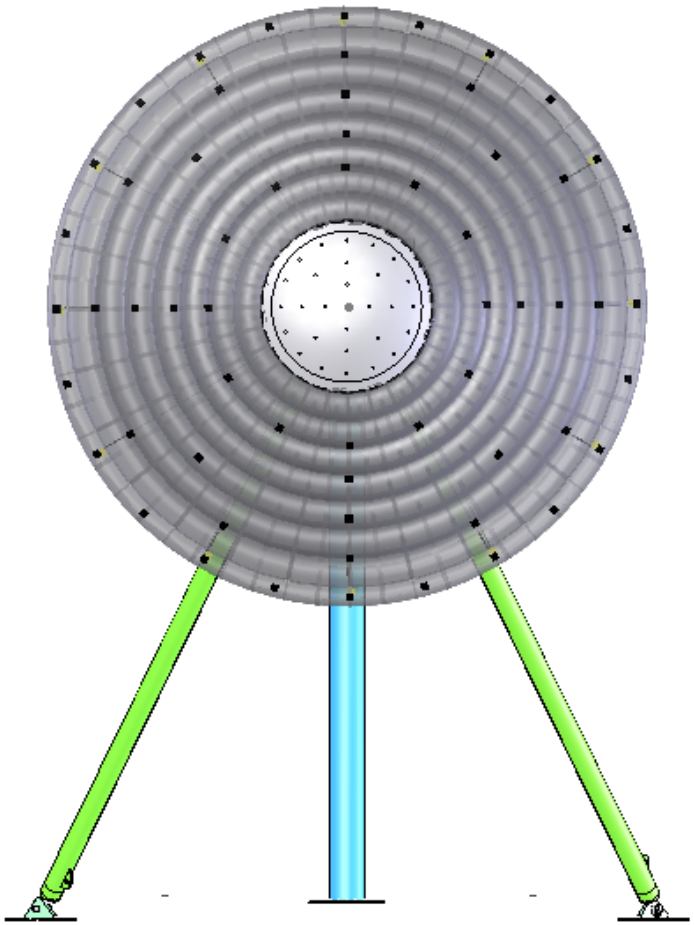

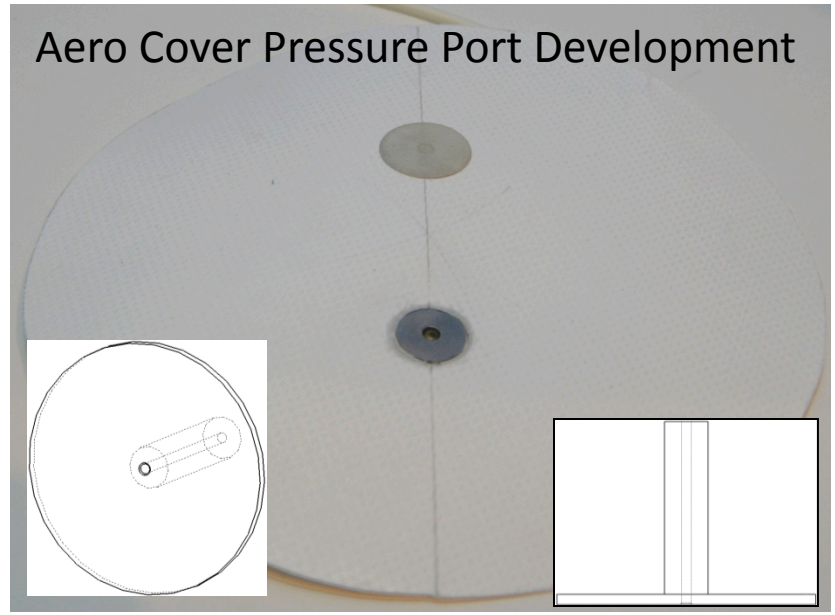

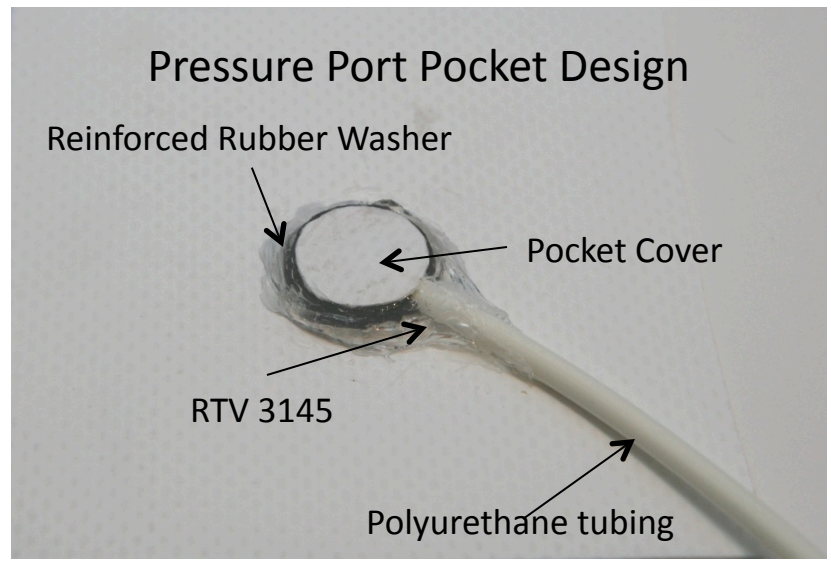

Instrumentation- Strap Load Pins

- 8 load cell pins (4 fwd and 4 aft) will be installed at TBD locations
- Custom design by Novatech Measurements LTD, rated for 3000 lb
- Load cell pins will replace primary strap bracket assembly at these locations
- Pins to measure strap loading at the primary strap locations (fwd and aft)
- Notional concept shown below:

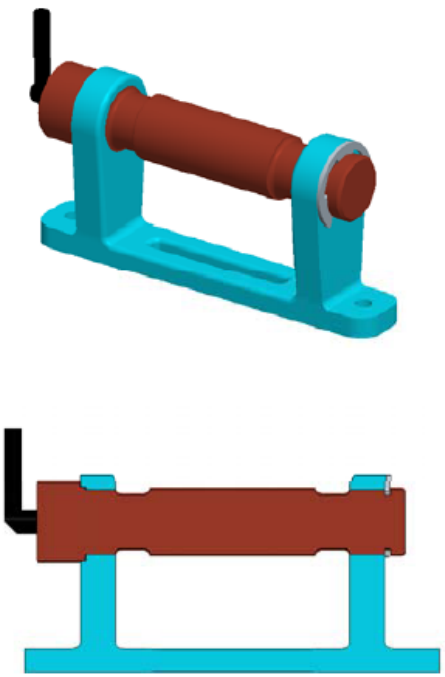

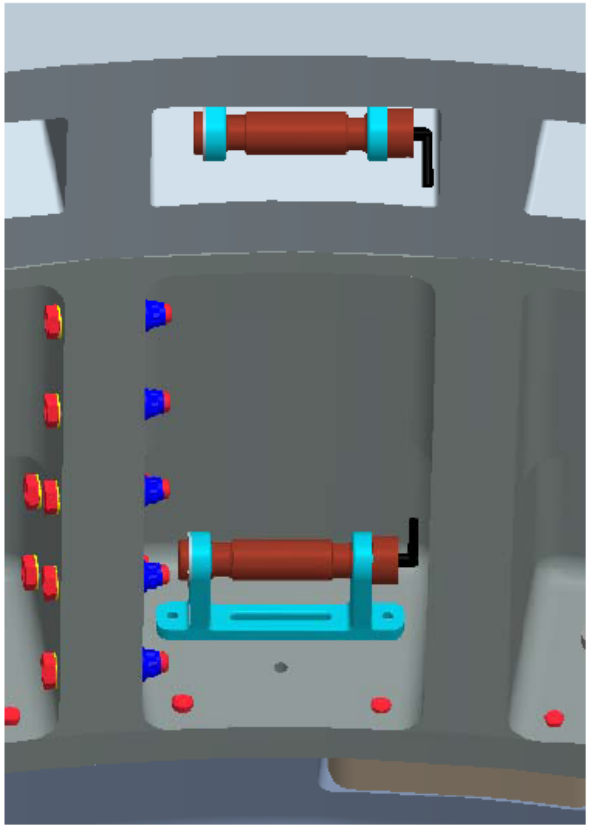

HIAD Developmental Instrumentation

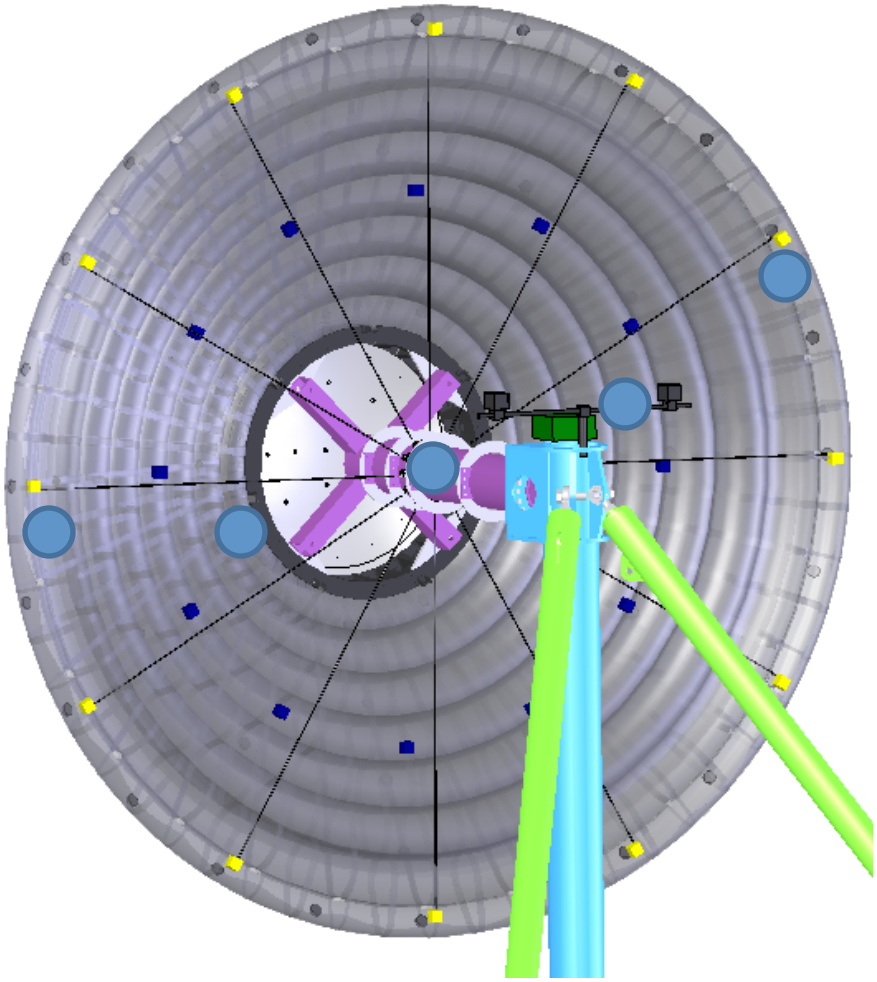

1 -String Potentiometers/Angular Transducers
2 -Thin-Film Embedded Bend Sensors
3 -MEMS Based Sensors
Pressure
3-axis Accelerometer
4 -Wireless Data Acquisition Development
5 -Flexible Printed Circuit Boards
6 -3-D High Definition Cameras

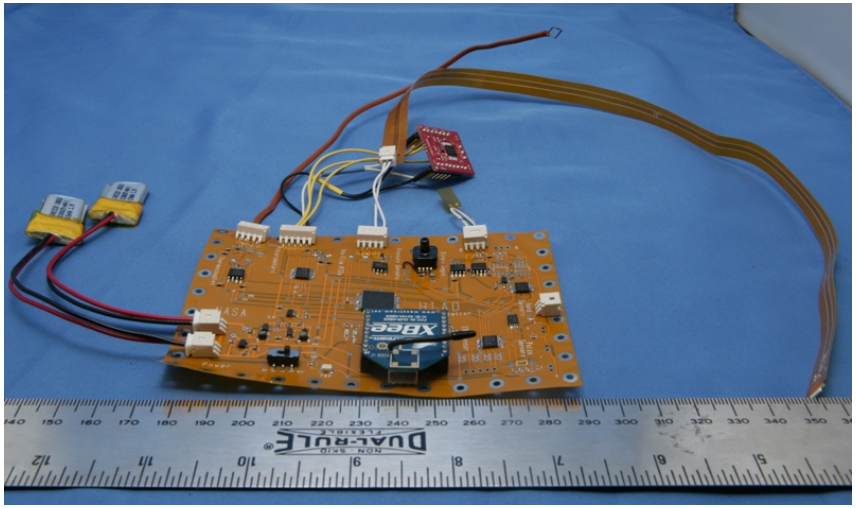

Photogrammetry

Objectives: Obtain Full Field Measurements of HIAD Deformation under the full range of model positions and tunnel conditions.

Design Approach: Utilize Virtual Imaging Software (Vinci) to design acquisition system, trading against constraints imposed by facility mounting locations and lighting approach.

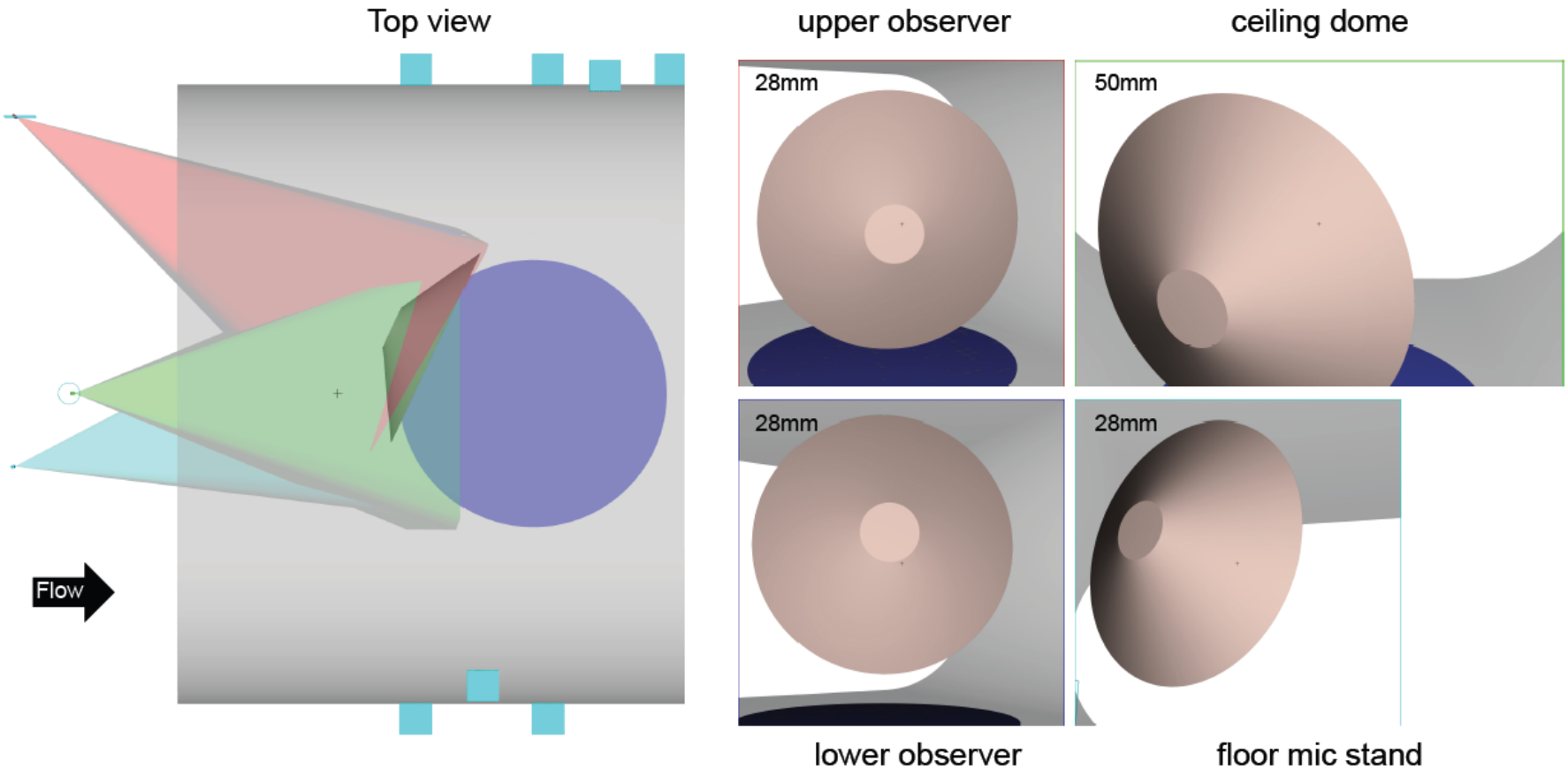

Photogrammetry Approach

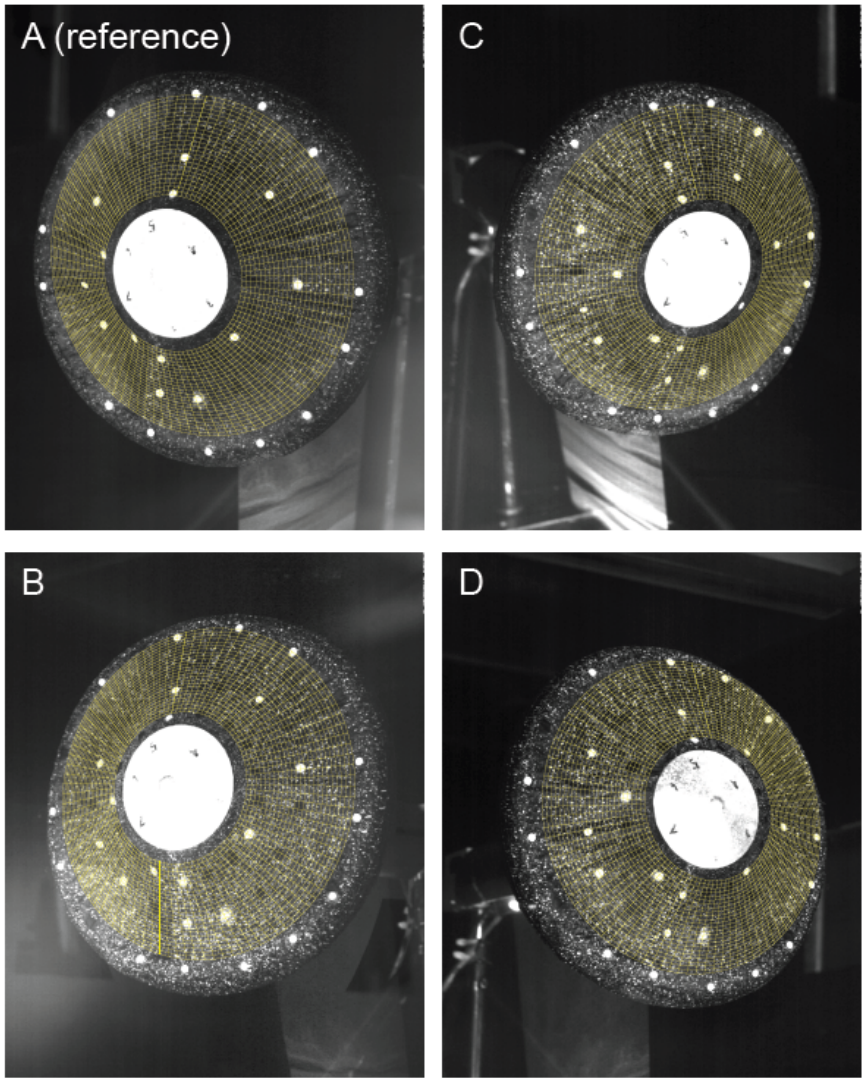

- Speckle model
- Define surface grid XYZ (cone)
- Project grid into image
- Enforce correspondence at each node in first images
  - eliminate perspective distortion by local "de-warp"
  - B_0-to-A_0 cross correlation
- Track local speckle at each node through image sequence
  - B_i-to-B_0 cross correlation
- Compute object-space coordinates from image coordinates and camera internal and external orientations

Modeling and Simulation Development

- **Correlate model to NFAC Test data to anchor design to support future HIAD development, design optimization and larger scale inflatable design**
- **Understand interdependency between internal pressure, dynamic pressure & structural stiffness**
- **6.0 m LS-DYNA model developed by Airborne Systems**

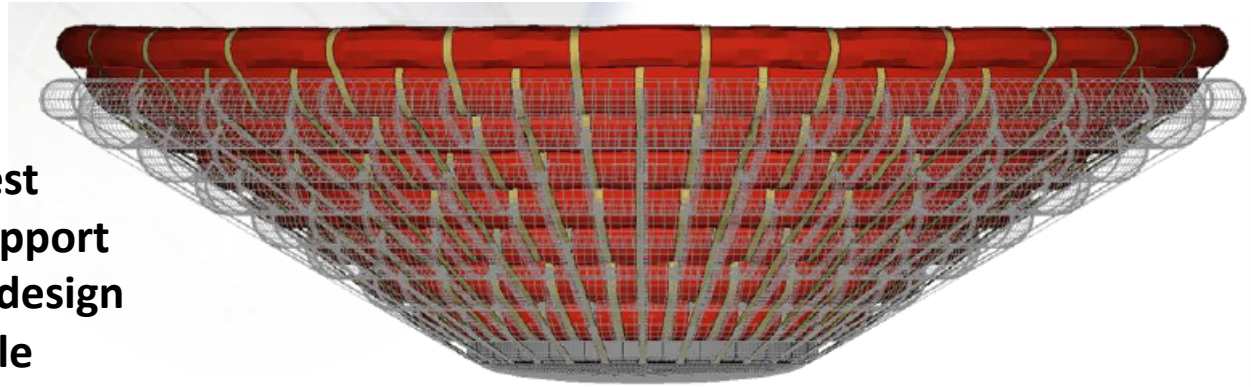

Static and Deformed at 0 deg Yaw

Static and Deformed at 25 deg Yaw

Acknowledgements
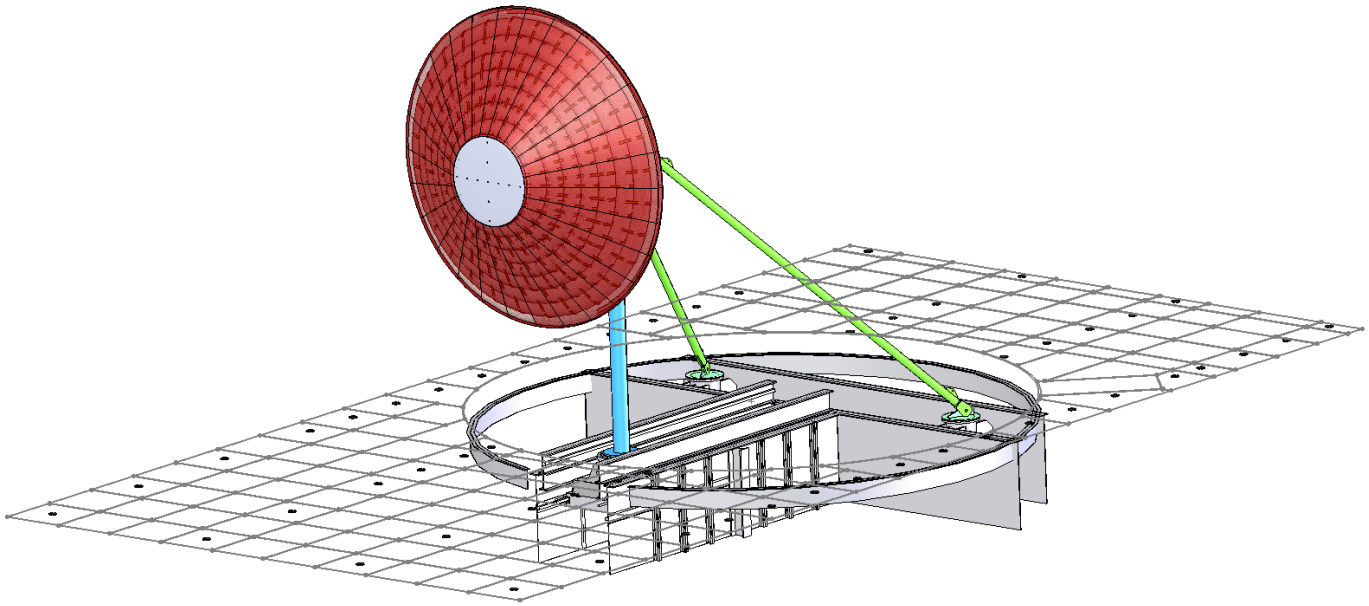
- **Test Design-** Jeffrey D. Brown, Dave Bogdanoff, Kurtis Long
- **Test Support Hardware Design and Analysis-** Carl Kruger, XinXin Nee
- **Photogrammetry**- Laura Kushner, Ed Schairer, J.T. Heineck, Anthony Calomino, Tim Schmidt
- **NFAC**- Joseph Sacco, Stephen Lee, John Perry, Daniel Pruyn
- **Analysis and Design** - John Von Norman, Michael Lindell, Brian Saulman, Sean Hancock
- **Test Articles -** Dave Jurewicz, Glen Brown, Benjamin Tutt, Leo Lichodziejewski, Christopher Kelly, Brian Gilles
- **Oversight**- Aga Goodsell, Michael Wilder, Marc Rezin