WE LOOK AFTER THE EARTH BEAT

The Lunar and Phobos Sample Return Missions

Antonella Ferri, Franco Fenoglio Stewart Pelle, Maurizio Belluco THALES ALENIA SPACE
Bérèngere Houdou, Richard Fisackerly, Thomas Voirin, Jonan Larranaga,Denis Rebuffat, ESA ESTEC

18/06/2015
IPPW-12

OPEN

ThalesAlenia Space
A Thales / Finmeccanica Company

83230912-DOC-TAS-EN-003

Mission Objectives

- Scientific :
  - bring back frozen samples from the Moon south polar regions for analysis in Earth laboratories;
  - Investigate:
    - origin, composition and abundance of lunar volatiles
    - opportunities for in-situ resource utilisation of the Moon
    - the nature of organic chemistry at the lunar south pole
    - Lunar materials
    - History of the Earth-Moon system

It's a study of an ESA MISSION IN COOPERATION WITH ROSCOSMOS

- Technological :
  - Demonstrate and implement key technologies, capabilities:
  - Solid sample preservation
    - from acquisition (until collection in Kazakhstan (sample preserved in its original status)
  - Rendezvous and capture technology
  - LAV High Thrust Propulsion for ascent from the Moon's surface
    - $\Delta V \approx 1957 ms^{-1}$
    - Mass: 200kg
  - Earth Re-entry Capsule
    - Sub-sonic parachute
      - Deploys @ mach 0.4

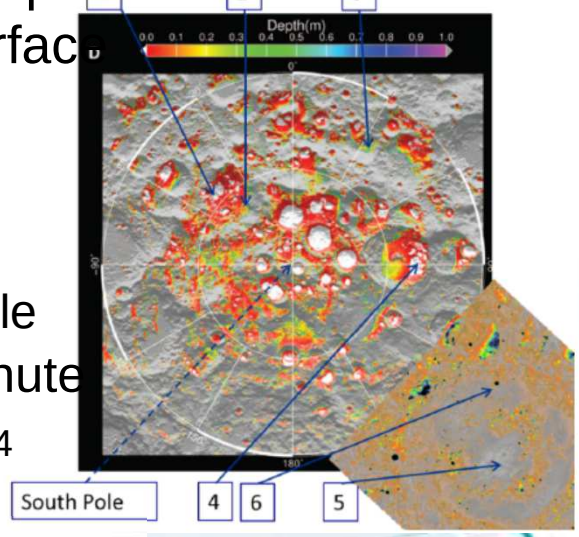

OPEN
© 2015, Thales Alenia Space

LPSR System elements

- Launch 1 (Soyuz 2.1b + Fregat)
  - **Orbiter Return Module (ORM)**
    - **Orbiter Vehicle (OV)**
    - **Earth Return Vehicle (ERV)**
  - **Earth Return Capsule (ERC)**
- Launch 2 (Angara A3 + Fregat):
  - *Lunar Module (LM)*
  - **Lunar Ascent Vehicle (LAV)**
  - **Sample Containment and Transfer system**
    - **Orbital Sample Canister (OSC)**
  - *Sampling System*
- **Ground segment**
  - **Mission Ops Centre**
  - **Ground station and Comm Network**
  - *Sample Receiving Facility*

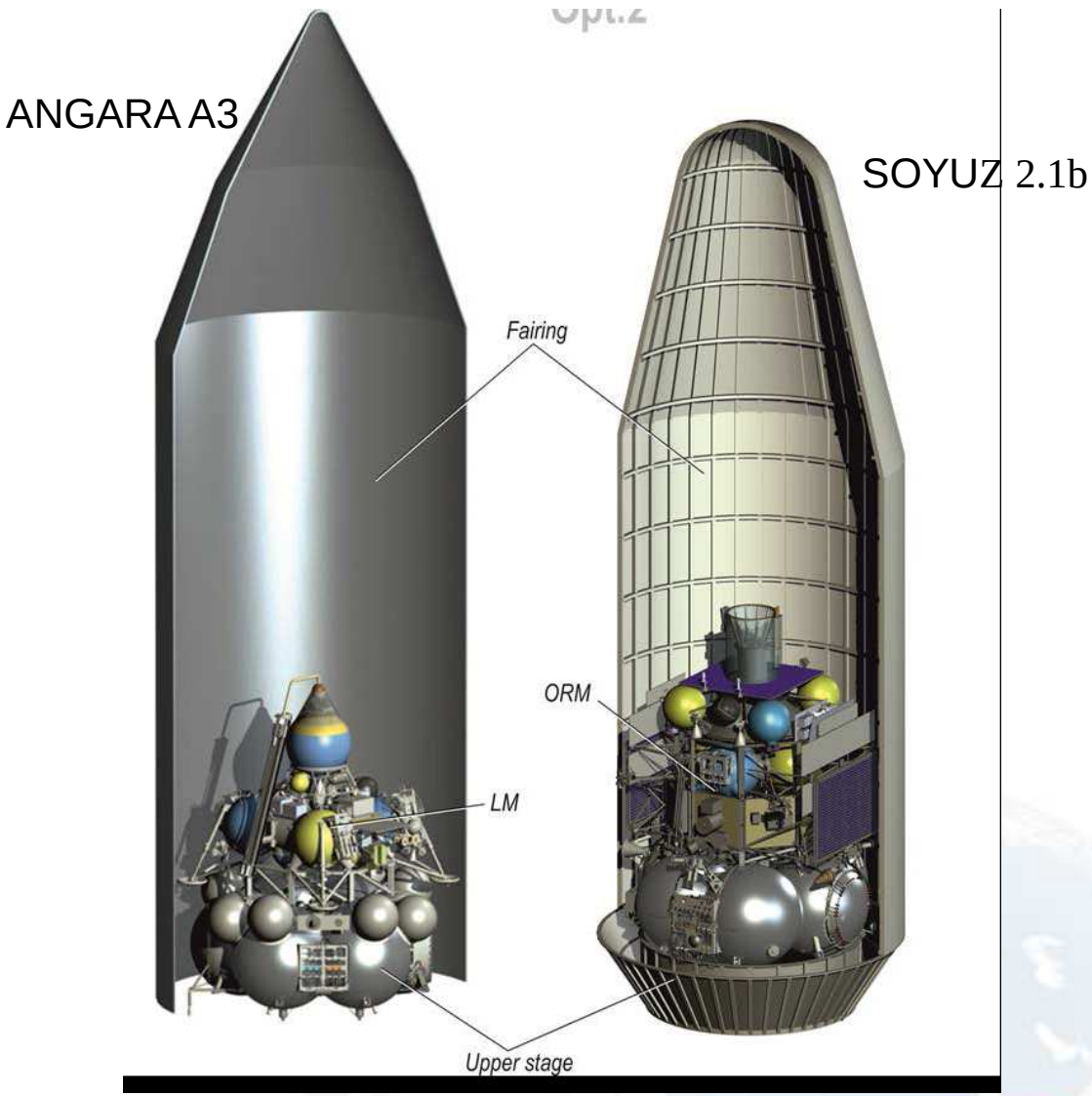

**In italic: elements not to be considered in the study*

OPEN
© 2015, Thales Alenia Space

LPSR mission profile

1. First launch to place the ORM in LLO (100X100 km)
2. ORM orbit acquisition
3. Second composite (Lander and Ascent vehicles) launch
4. Second composite landing.
5. After samples acquisition (7 days) the LAV performs the ascent maneuver up to 50X50 km
6. The ORM performs phasing and Long range RdV with LAV
7. LAV releases the OSC
8. ORM performs short range RdV with Orbital Sample Canister
9. ORM performs capture of OSC
10. OSC is placed inside the ERC
11. ERV is separated from ORM and performs in-bound maneuver
12. ERC separated from ERV and performs re-entry
13. Sample canister retrieved within 4 hours after touch-down

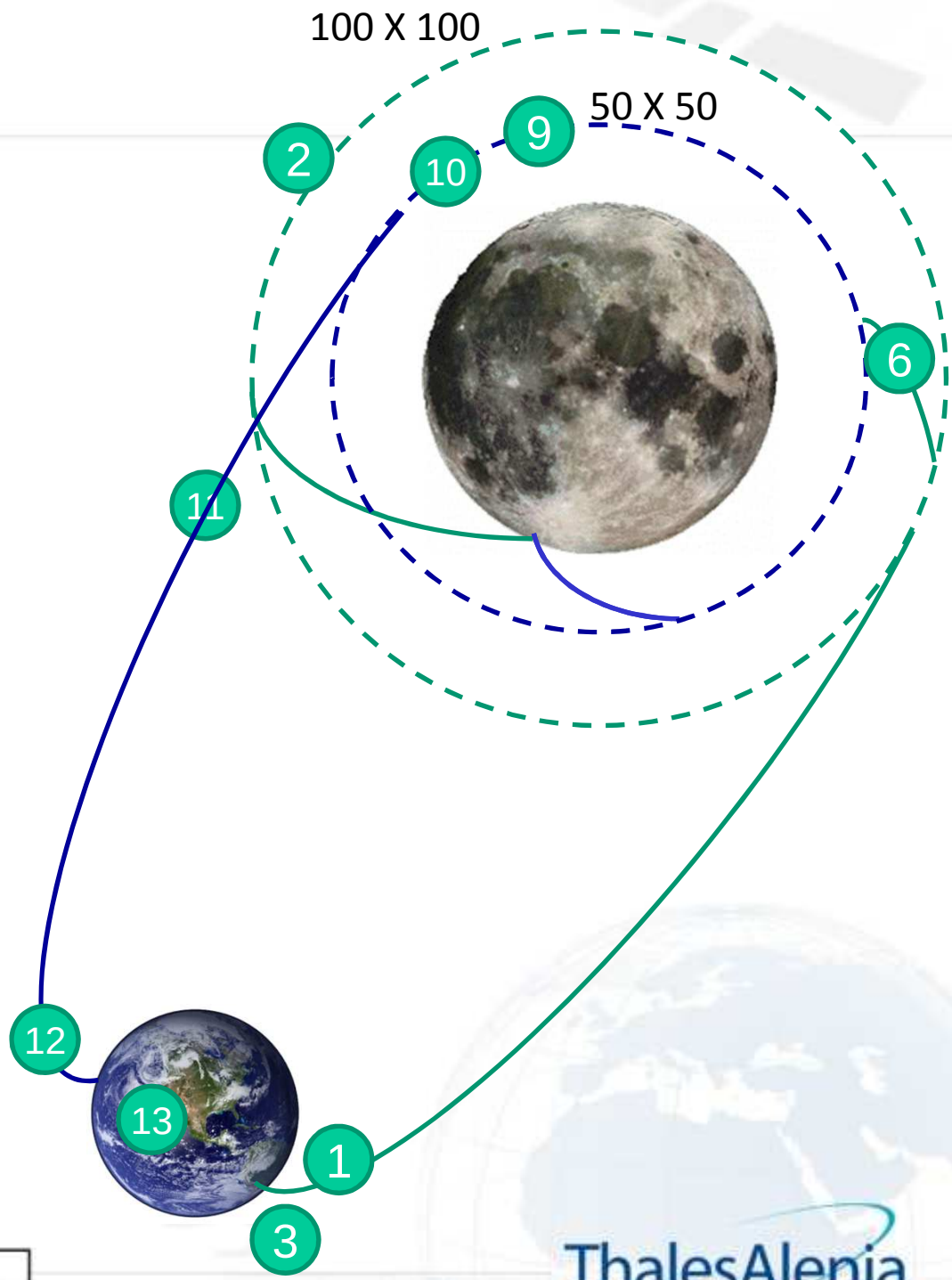

OPEN

© 2015, Thales Alenia Space

ThalesAlenia Space

PHOOTPRINT
Launch opportunities from 2024 onwards

STUDY CONCLUDED in 2014

- Full – european Sample Return Mission: **100g** returned from the Phobos' soil and provides complementary science results not attainable by the sample itself
- After insertion into Mars orbit the SCC approaches Phobos, refines its location with Quasi Satellite Orbits (30-100 km elliptic) and Fly-bys (down to 250 m) Phase (about 1 year), selects the landing site and then proceeds to the descent and landing
- A Robotic Arm collects the sample and then places it into the ERC
- The ERV performs the ascent and the transfer to Earth, and brings the ERC onto a Earth re-entry trajectory

OPEN

© 2015, Thales Alenia Space

ThalesAlenia Space

PHOOTPRINT Baseline Mission Profile

- A **100g-sample** of Phobos would be recovered on Earth in a ~**1000 to 1300 days** timeframe, depending on the selected year of launch
- Mission Timeline Summary:

If launch is on September 2024, Sample recovery on Earth can be on June 2027

Launch date	2024	2025
Arrival at Mars [month-year]	ago-25	set-27
Cruise duration [days]	308	710
Stay duration [days]	365	370
On surface Operations [days]	10	10
Return Cruise [year]	2026	2028
Departure date from Mars [month-year]	ago-26	set-28
Retrn Cruise duration [days]	320	339
Mission Overall duration [days]	993	1316

OPEN

© 2015, Thales Alenia Space

ThalesAlenia Space

PHOOTPRINT: Baseline Mission Profile

- Launch planned on ARIANE 5ECA from Kourou on 2024
- 10-Phobos day's static landing on the moon surface
  - 10 Phobos days = 75 Earth hours (3 Earth days)
- Crash landing return planned in Woomera Test Range (Australia)
- Other possible launch dates and main mission figures:

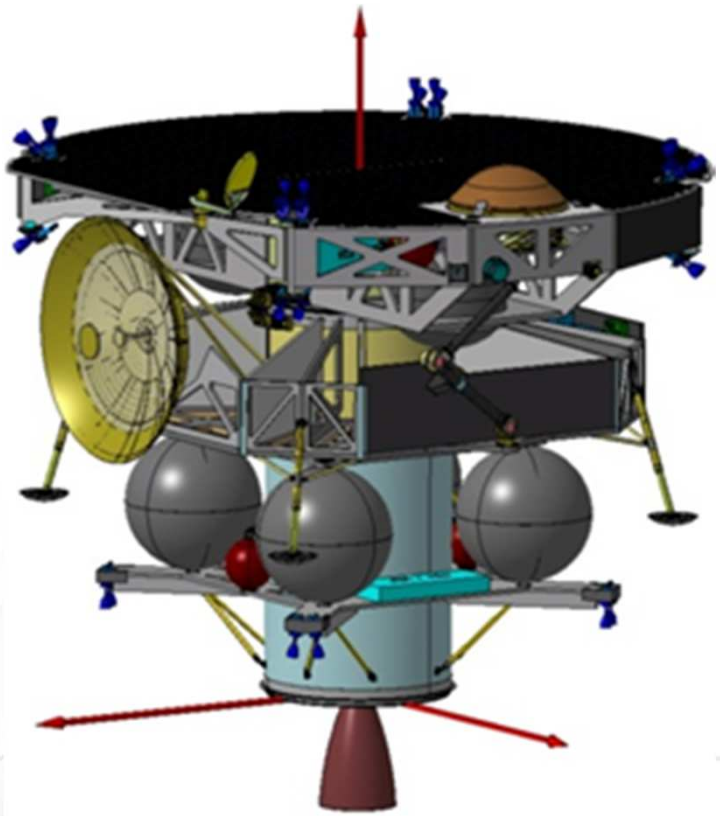

Launch Dates	2024	2025	2026
Available Mass at Launch [kg]	4197	4744	4497
S/C Mass at launch [kg]	4145	3884	4381
Total Propellant [kg]	2560	2296	2794
Total delta-V [m/s]	4222	3957	4352

OPEN

© 2015, Thales Alenia Space

ThalesAlenia Space

PHOOTPRINT: Near Phobos Phase

- Following the optimization manoeuvers for reaching Phobos orbit, the mission enters the
- Near Phobos Phase: Quasi-Satellite Orbit committed to the scientific characterization and landing site targeting
- Low altitude flyby and descent phases: two scenarios have been analyzed:
  - Direct descent
  - Hovering on the landing spot having the ground control in the loop

  The very last part of the descent are on a fully passive mode

OPEN

© 2015, Thales Alenia Space

ThalesAlenia Space

PHOBOS SAMPLE RETURN PHASE A STUDY

- PhSR is a candidate mission for MREP programme
- TAS System Study for three scenarios
- Joint Mission Baseline Scenario
- Joint Mission Backup scenario
- ESA standalone Mission scenario

OPEN

© 2015, Thales Alenia Space

ThalesAlenia Space

Modular Approach & Sharing between Agencies

	Joint baseline	Joint back-up	ESA Stand-alone
PM		X	X
LM	X		X
ERV			X
ERC	X	X	X
SATCS	X	X	X

Figure 3: elements to be studied by the Contractor.

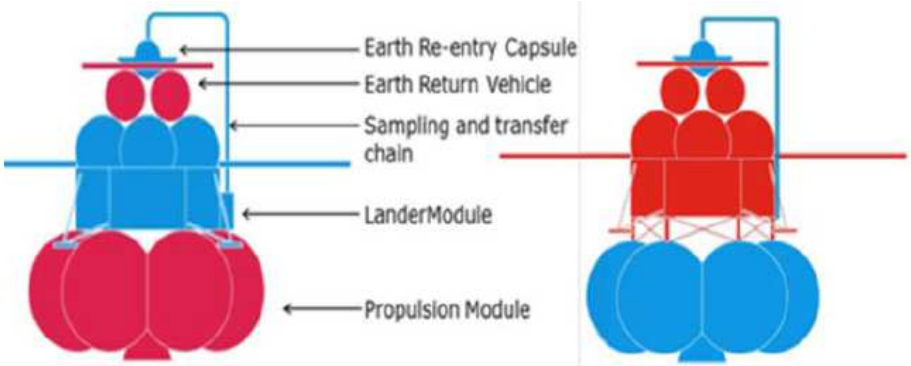

Figure 1 Joint mission baseline architecture (left) and joint mission backup architecture (right) as per preliminary ESA/Roscosmos agreement [RD9] – ESA contribution is represented in blue while Roscosmos contribution is in red.

Launcher:
- TWO Joint scenarios (both): **Proton**
- ESA S/A: **A5 or A6.4**

Flight Segment:
- PM + LM + ERV + ERC + SATCS (Sample Acquisition Transfer and Containment System)

Ground Segment:
- Ground Station and Comm's Network (GSCN)
- Mission Ops Centre (MOC)
- Science Ops Centre (SOC)

Sample Receiving Facility (SRF)

	Baseline		Backup	
	ESA	ROSCOSMOS	ESA	ROSCOSMOS
Launcher				
Propulsion Module (PM)				
Lander Module (LM)				
Sampling and Transfer Equipment		With ROSCOSMOS Participation (*)		With ROSCOSMOS Participation
Earth Return Vehicle (ERV)				
Earth Re-Entry Capsule (ERC)				
Science Instruments				
Launch Ops				
SC Cruise + Landing Ops				
ERV SC Operations				
Science Operations				
Ground support				
Sample Receiving facility				
Science exploitation				

Joint mission sharing preliminary ESA / Roscosmos agreement for the baseline and backup mission architectures , for information only ([RD9].).

THALES ALENIA SPACE INTERNAL

This document is not to be reproduced, modified, adapted, published, translated in any material form in whole or in part nor disclosed to any third party without the prior written permission of Thales Alenia Space - © 2012, Thales Alenia Space

ThalesAlenia Space
A Thales / Finmeccanica Company

TECHNICAL SOLUTIONS: Overall Configurations- starting point

JOINT BASELINE SCENARIO

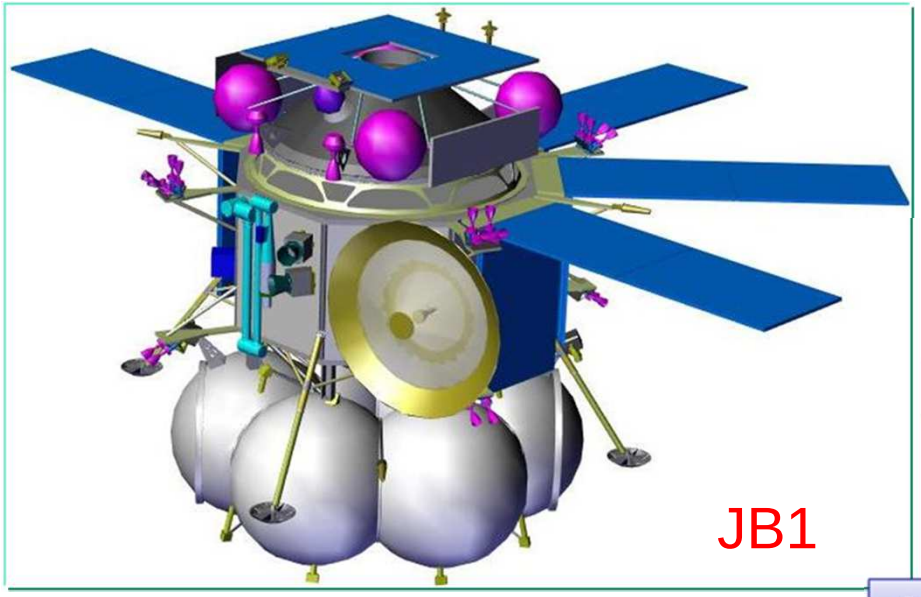

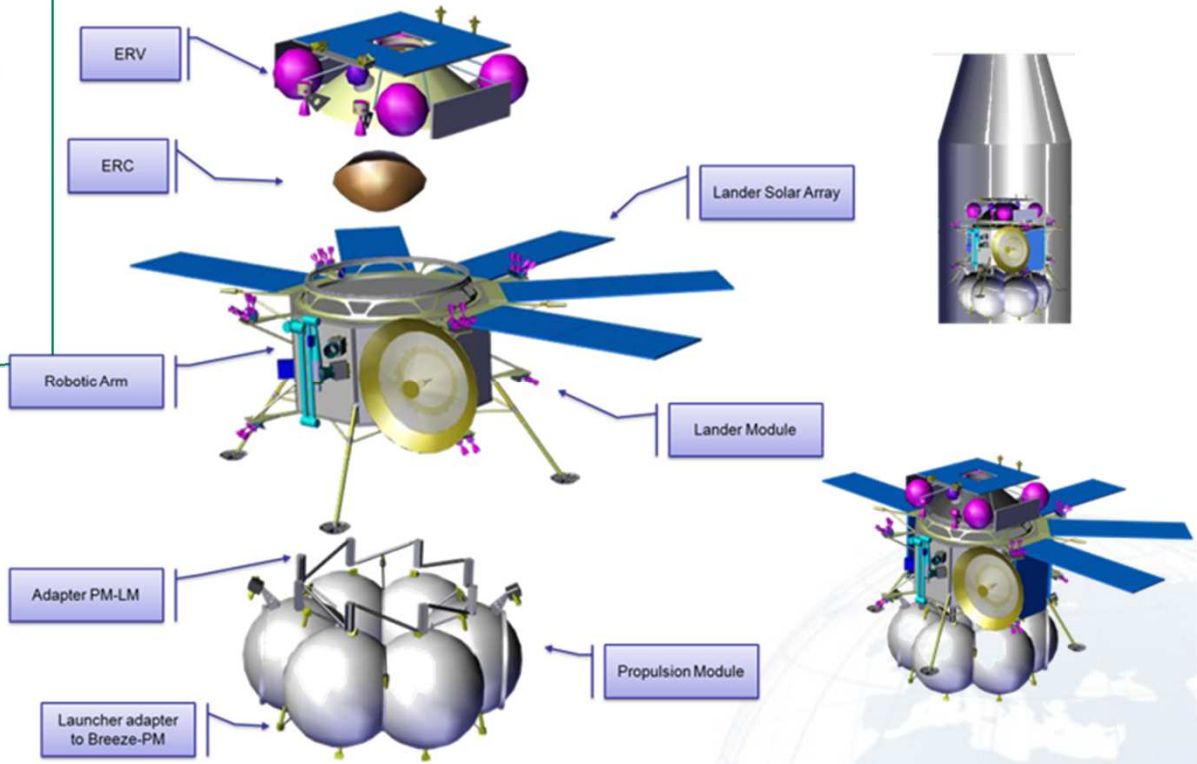

THALES ALENIA SPACE INTERNAL

This document is not to be reproduced, modified, adapted, published, translated in any material form in whole or in part nor disclosed to any third party without the prior written permission of Thales Alenia Space - © 2012, Thales Alenia Space

ThalesAlenia Space
A Thales / Finmeccanica Company

TECHNICAL SOLUTIONS: Overall Configuration – starting point

JOINT BACK-UP SCENARIO

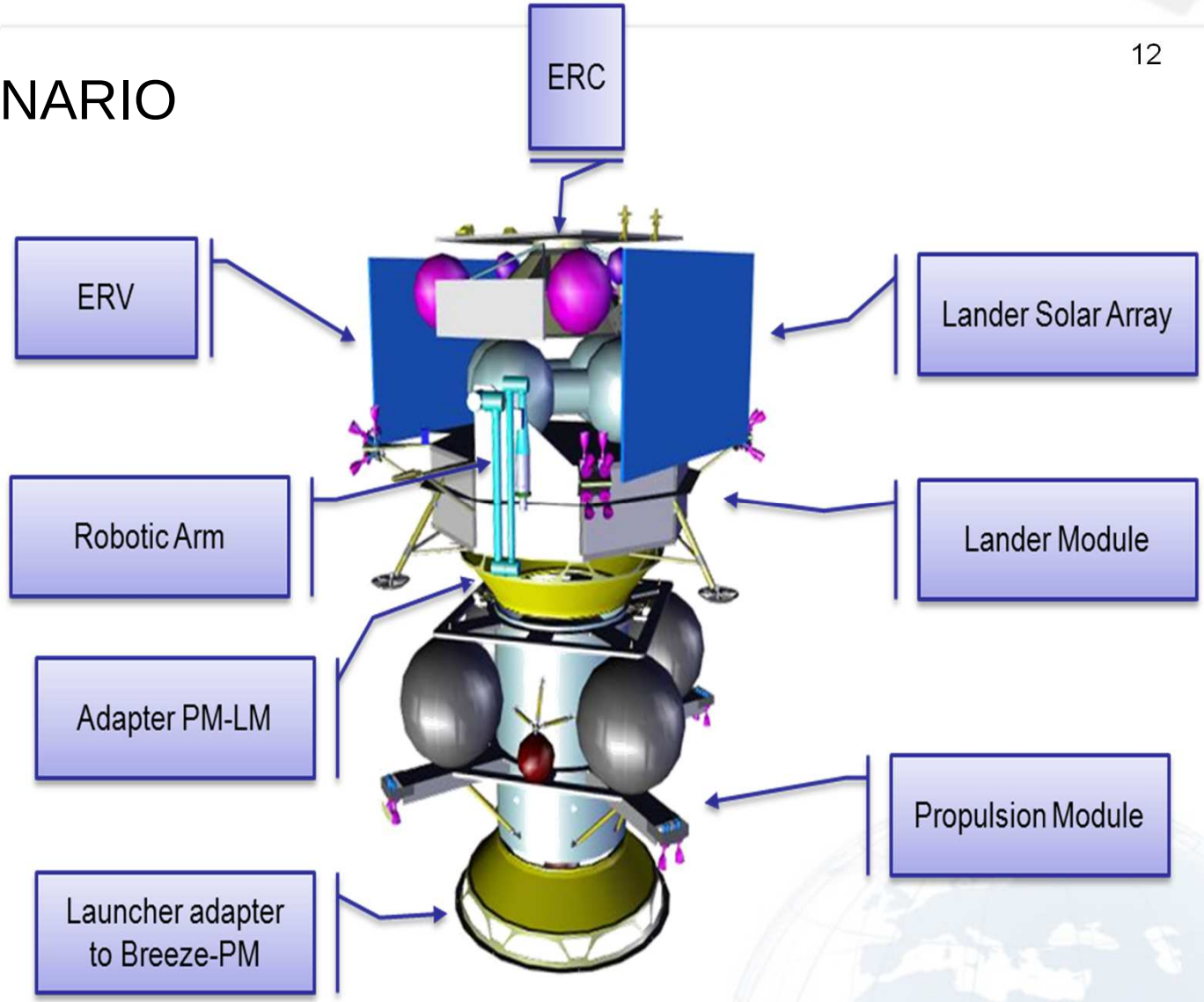

OPEN

© 2015, Thales Alenia Space

ThalesAlenia Space
A Thales / Finmeccanica Company