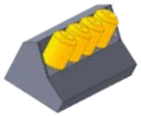

Seven Minutes of Terror and “Some Science”

Sarag J. Saikia

Advanced Astrodynamics Concepts

School of Aeronautics and Astronautics

12th International Planetary Probe Workshop

Cologne, Germany, June 15-19, 2015.

Mars/Mass Matters!

MER-A: 175 kg

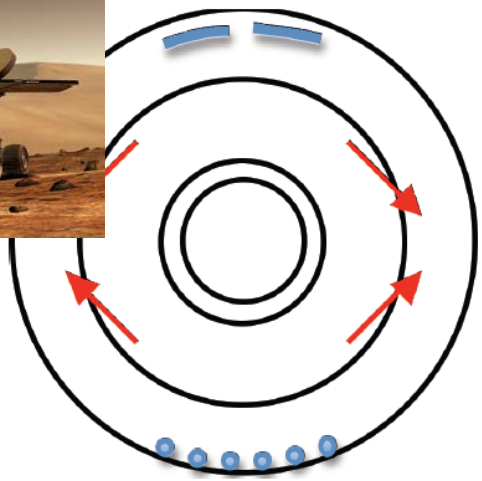

Brugarolas et al.

MSL Cruise Configuration

Cruise Stage

2 × 75 kg Cruise Balance Mass Devices (CBMD)

Solar Panels

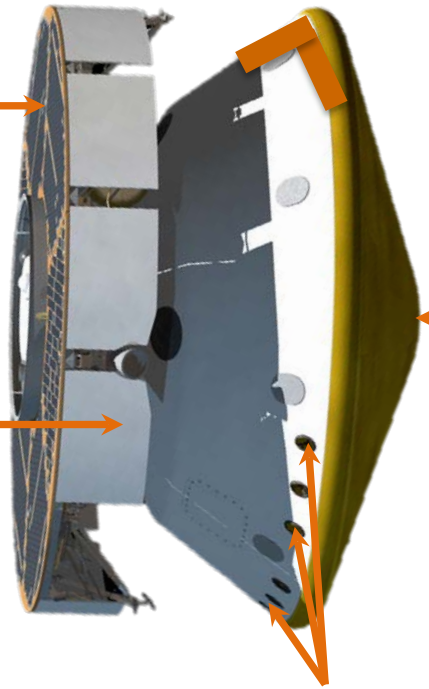

Heat Shield

Thermal Louvers

6 × 25 kg Entry Balance Mass Devices (EBMD)

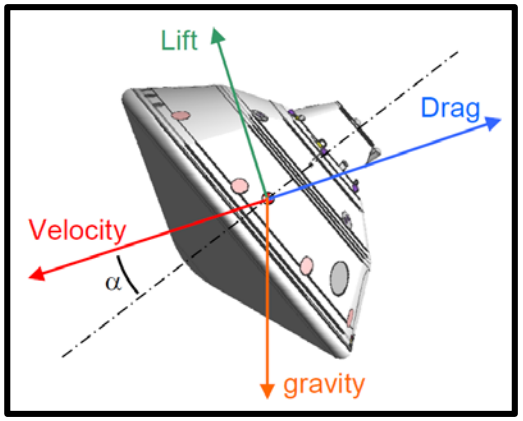

MSL Guided Flight Configuration with 2 CBMDs jettisoned

Measurement Sequence

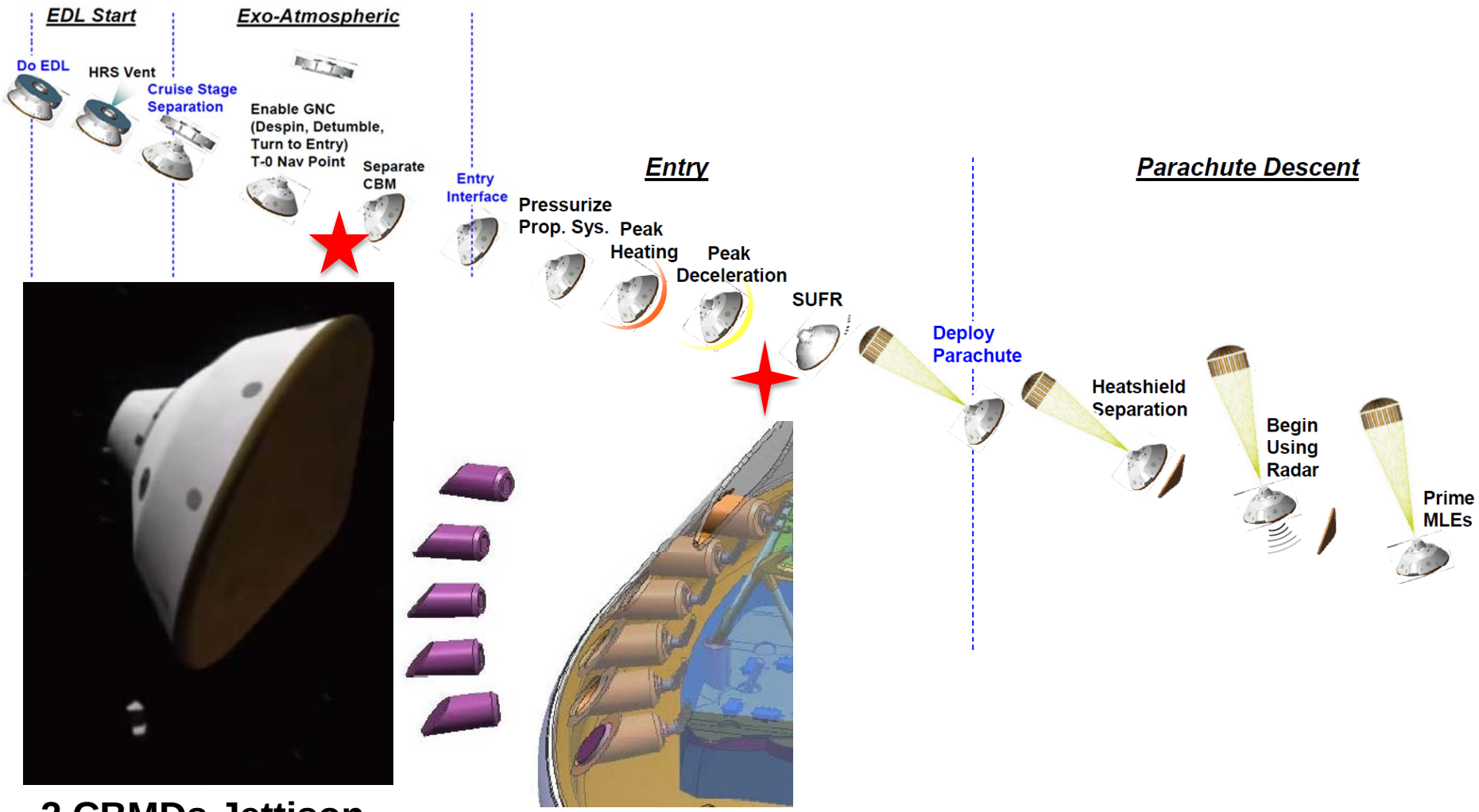

2 CBMDs Jettison

6 CBMDs Jettison

The Challenge

- Cruise balance mass devices (150 kg)
- Entry balance mass devices (150 kg)

Convert 300 kg of ejectable "Balance (Dead) Masses" on a future Mars mission (e.g. Mars 2020) into a scientific or technological payload.

Constraints of proposed concepts

- $\geq$ 90% of the original MSL BMD masses
- Preserve volumetric dimensions used for MSL balance masses
- Replace one or all (eight) of the balanced mass devices
- Address NASA's Strategic Knowledge Gaps for Mars exploration

Science & Technology Demonstration Traceability

Science Goals

- ❑ Characterize upper Martian atmosphere: aerocapture and aerobraking
- ❑ Characterize lower Martian atmosphere: atmosphere modeling
- ❑ Characterization of the impact craters

Technology Demonstration Goal

- ❑ Feasibility of a highly accurate, onboard, real-time hypersonic aerocapture and entry guidance

Payload Instruments (… on-the-chip)

- ❑ 3-axis gyroscopes, 3-axis accelerometers
- ❑ Pressure and Temperature Sensors

Hemmati et al.

3-axis Accelerometers
& gyroscopes

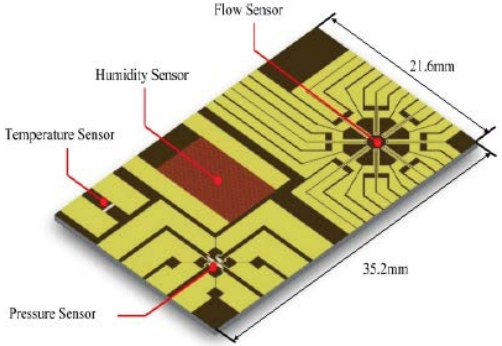

MEMS-Based Atmospheric Structure Instrument

Science & Technology Demonstration Traceability

STTM?

Investigation Goals	Observation Requirements	Instruments
Characterize the upper Martian atmosphere to support aerocapture and aerobraking design, especially for human-scale missions.	1. Acquire measurements from the 3-axis accelerometers, and 3-axis gyroscopes, pressure, and temperature sensors on the CBMD. 2. Acquire on the Main spacecraft (and/or EBMD) the transmitted X-Band radio signals from the CBMD transmitter.	3-axis accelerometers, 3-axis gyroscopes, pressure sensor, temperature sensor, X-Band transmitter
Characterize the lower Martian atmosphere to aid in Mars atmosphere modeling and to remove uncertainties	Acquire measurements from the 3-axis accelerometers, and 3-axis gyroscopes, pressure, and temperature sensors on EBMD.	3-axis accelerometers, 3-axis gyroscopes, pressure sensor, temperature sensor,
Characterization of the craters after the impact of CBMD on Mars surface	Acquire measurements from the 3-axis accelerometers, and 3-axis gyroscopes, pressure, and temperature sensors on the CBMD.	- Same as above -
B. Technology Demonstration Traceability Matrix		
Determining the feasibility of a highly accurate, onboard, real-time hypersonic aerocapture and entry guidance to support pinpoint landing of human missions to Mars as well as robotic missions to Uranus, Neptune, and other planetary destinations.	Acquire on the Main spacecraft (and/or EBMD) the transmitted X-Band radio signals from the CBMD transmitter.	X-Band transmitter

CBMD: Payload Accommodation

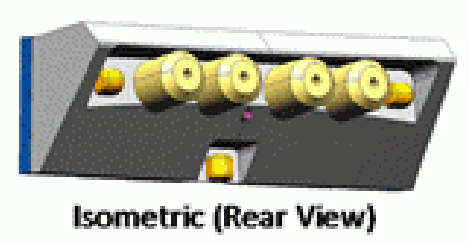

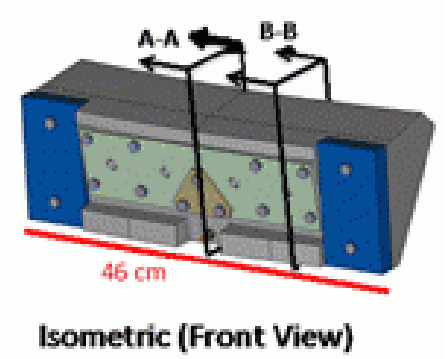

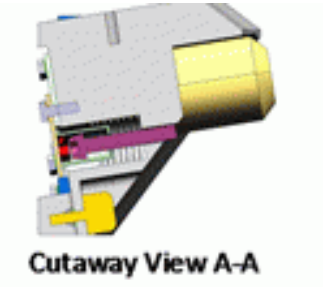

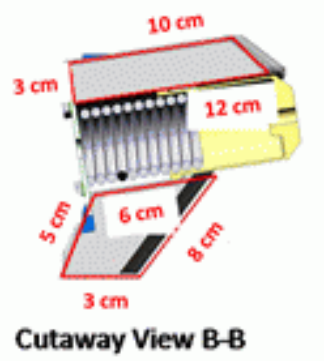

1. Cruise Balance Mass Device: Upper Section

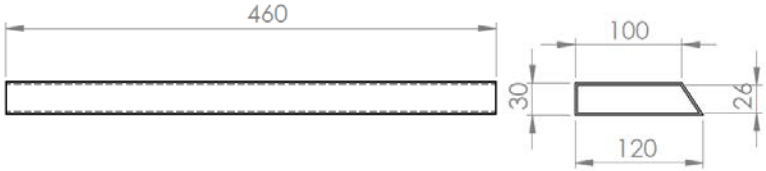

2. Cruise Balance Mass Device: Lower Section

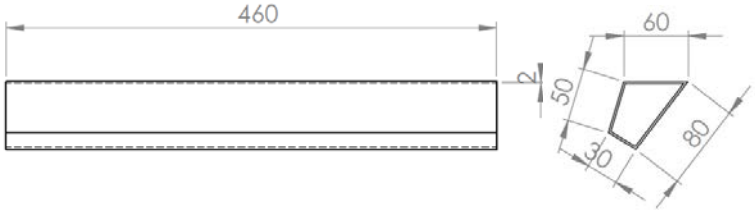

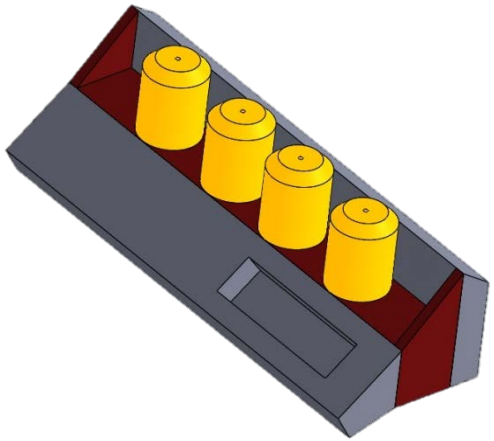

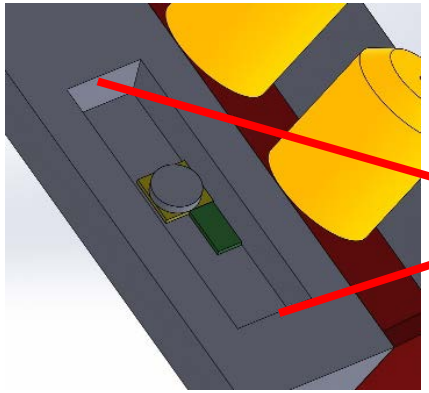

Mass removed

$$m = 2.28\,kg$$

$$2.5 \times 4 \times 15 \;\; (in\ cm)$$

EBMD: Payload Accommodation

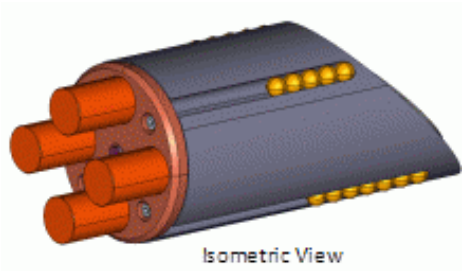

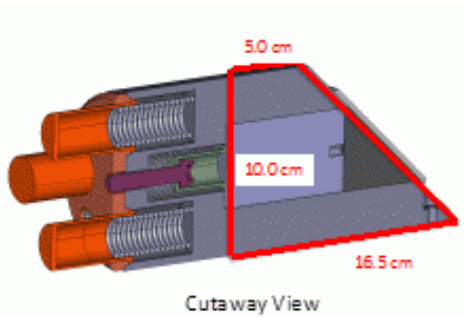

Image: NASA

EBMDs with embedded instrumentation

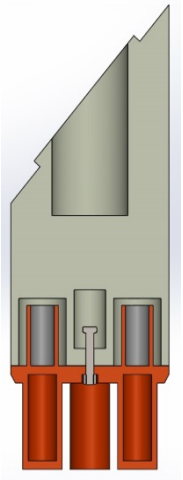

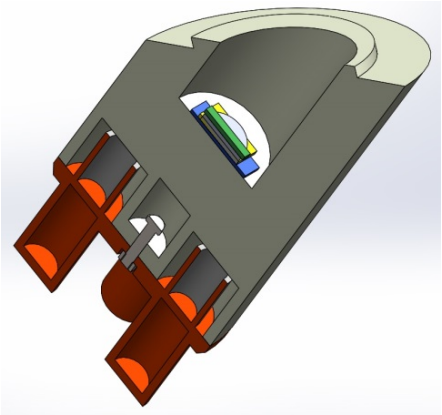

$$m = 2.25\,kg$$

$$r = 4\,cm$$

$$h_{\min} = 4.5\ cm$$

$$h_{\max} = 9.0\ cm$$

- 6 EBMDs (25 kg) are available

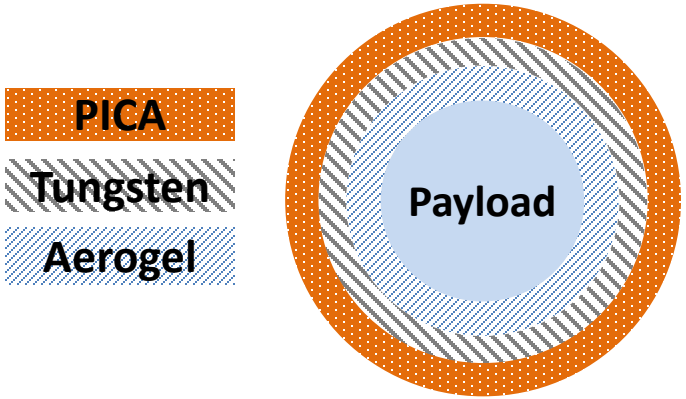

Concept of Operations

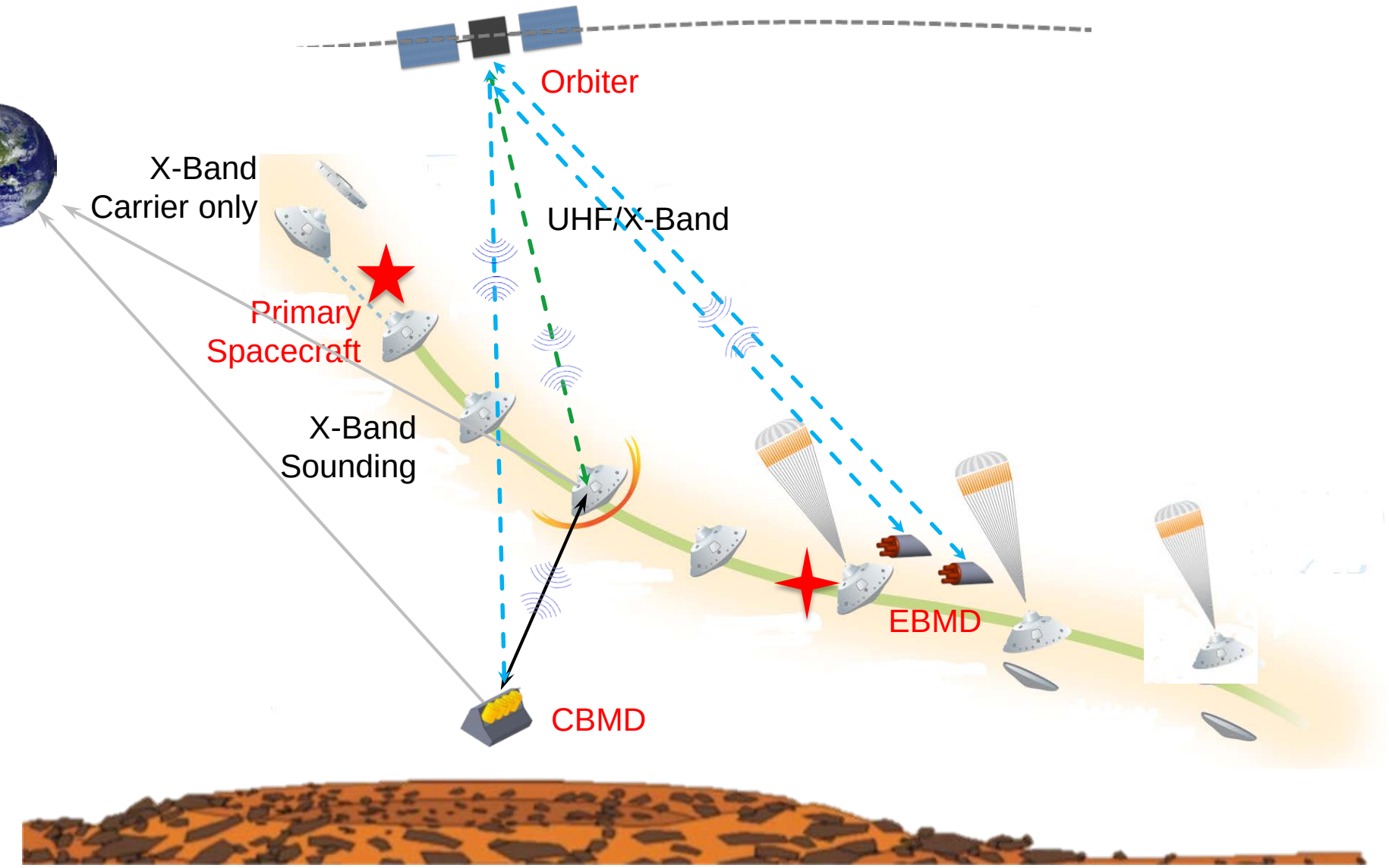

CBMDs and EBMD Properties

Ballistic Coefficient, $\beta = \dfrac{m}{SC_D}$

$$\beta_{MOD} = 0.9 \times \beta$$

CBMD example attitude modes

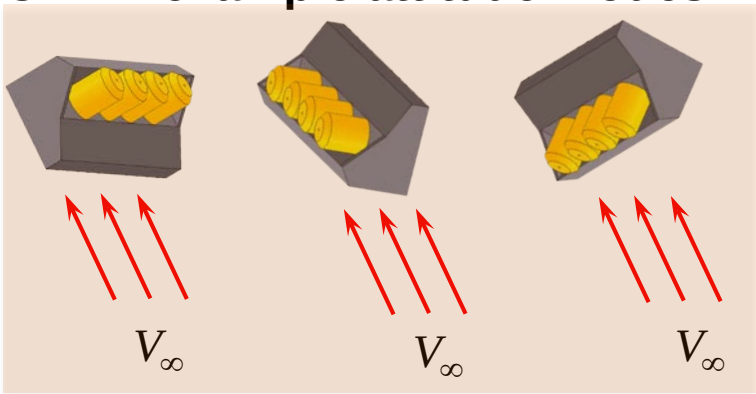

EBMD example attitude modes

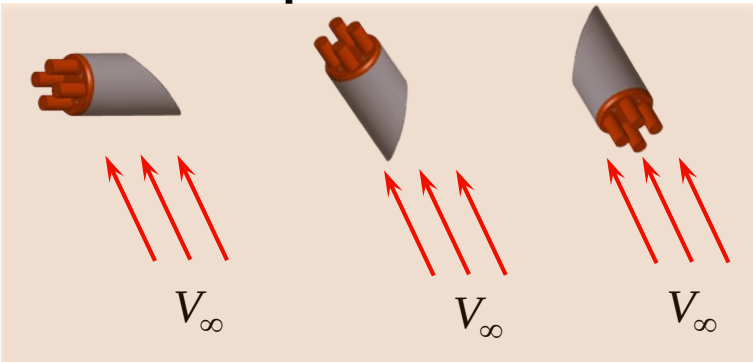

MSL	
m	3152 kg
SC_D	18.69 m^2
β	~160 kg/m^2

CBMD	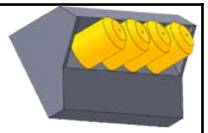
m	75 kg
β	~1600 kg/m^2
β_{MOD}	~1440 kg/m^2

EBMD	
m	25 kg
β	~3000 kg/m^2
β_{MOD}	~2700 kg/m^2

Trajectory: Implications for Science

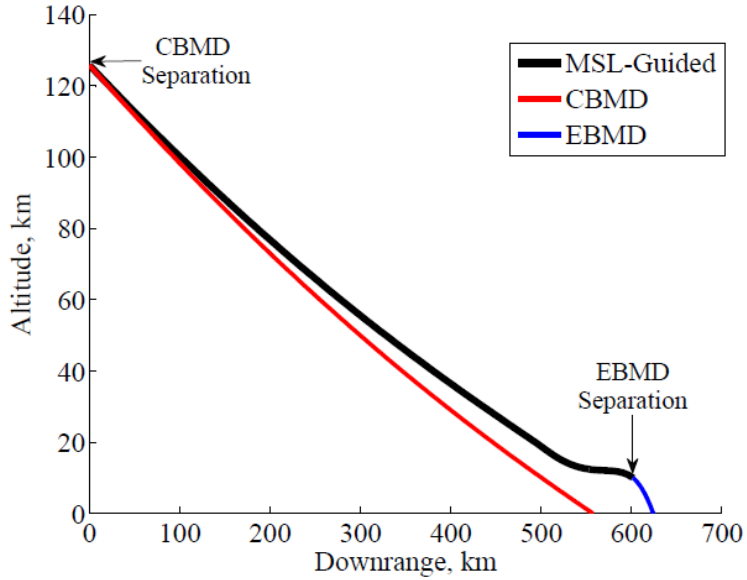

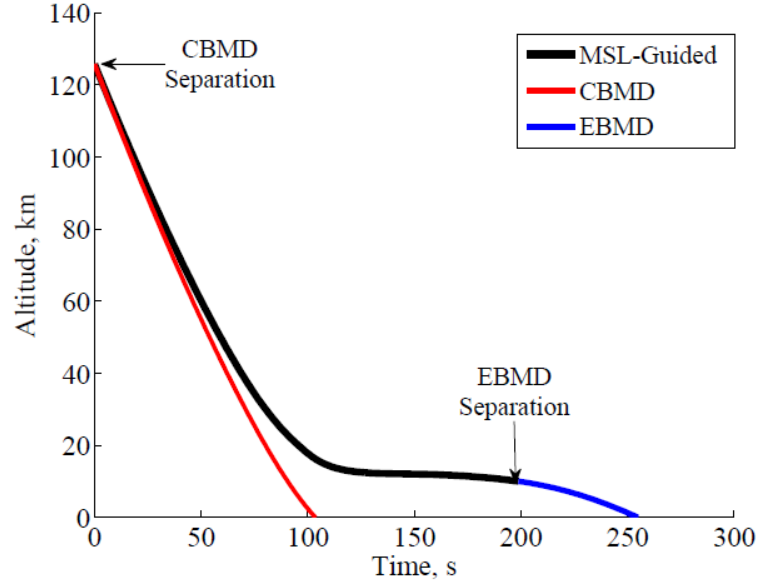

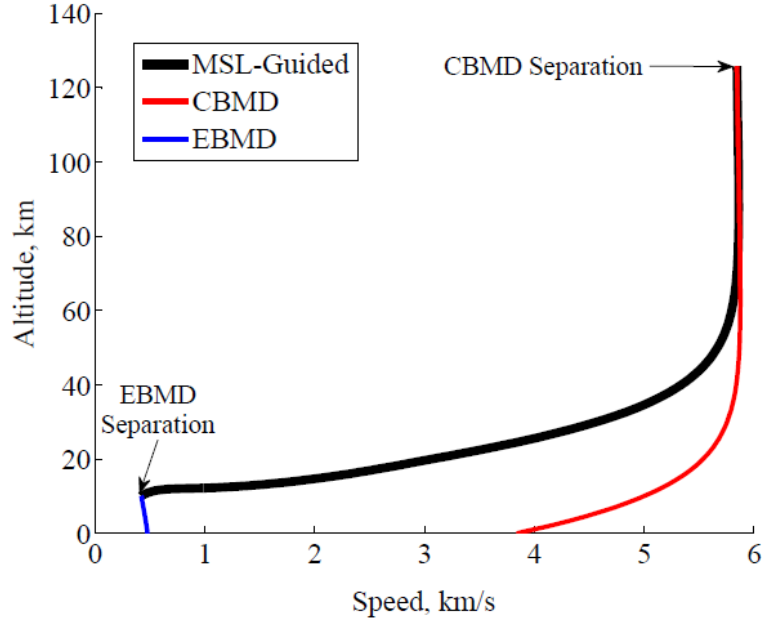

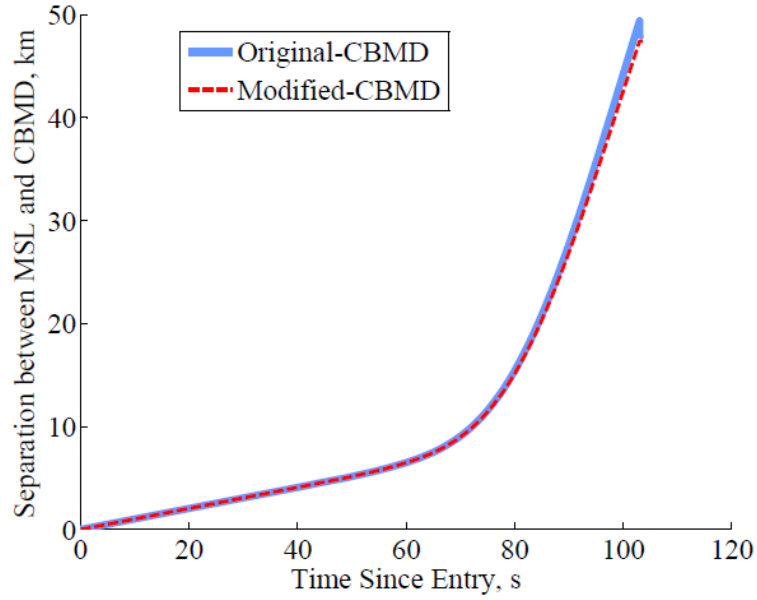

Positive range-rate between MSL & CBMD: no recontact

Characterization of Upper and Lower Atmosphere

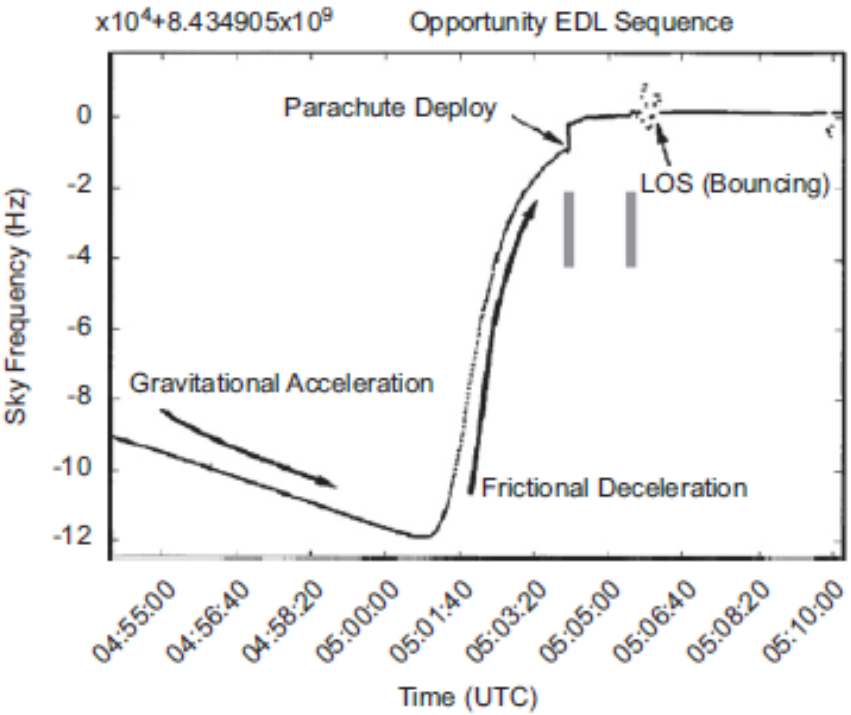

P. Withers

CBMD	
Time to Impact	~104 s
Data Acquisition time	>104 s
Peak g	~10–16 g's
Peak T	~2100 ºC

EBMD	
Time to Impact	~60 s
Data Acquisition time	> 60 s
Peak g	Negligible
Peak T	Negligible

Characterization of Impact Craters

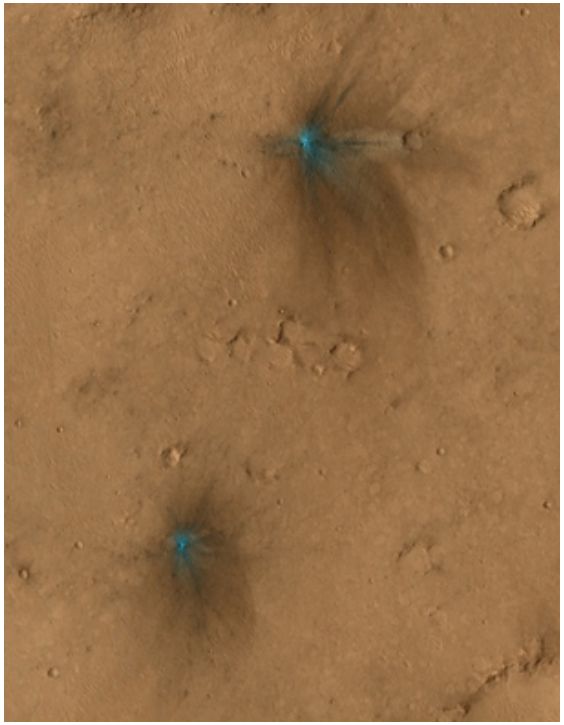

MRO HiRISE image of CBMDs impact craters

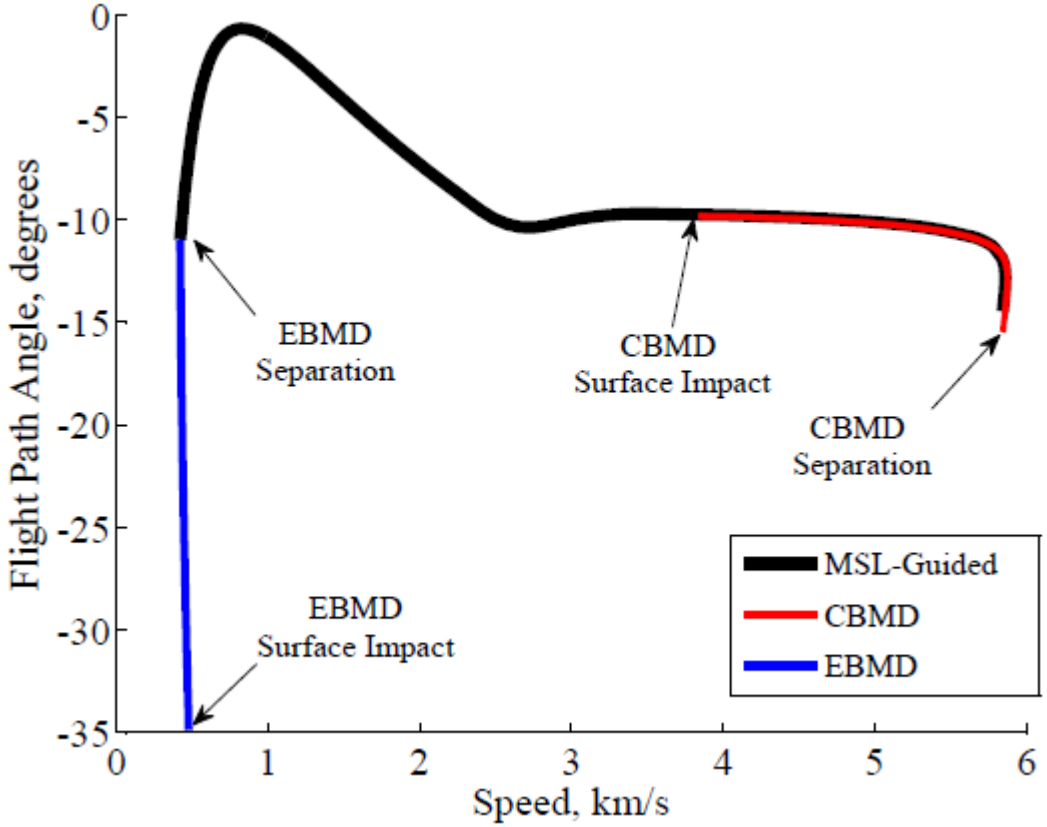

Probing via Active Interactions with Atmosphere

- **Interaction of RCS jet with 3 km/s freestream produces OH as a result of dissociation of water**

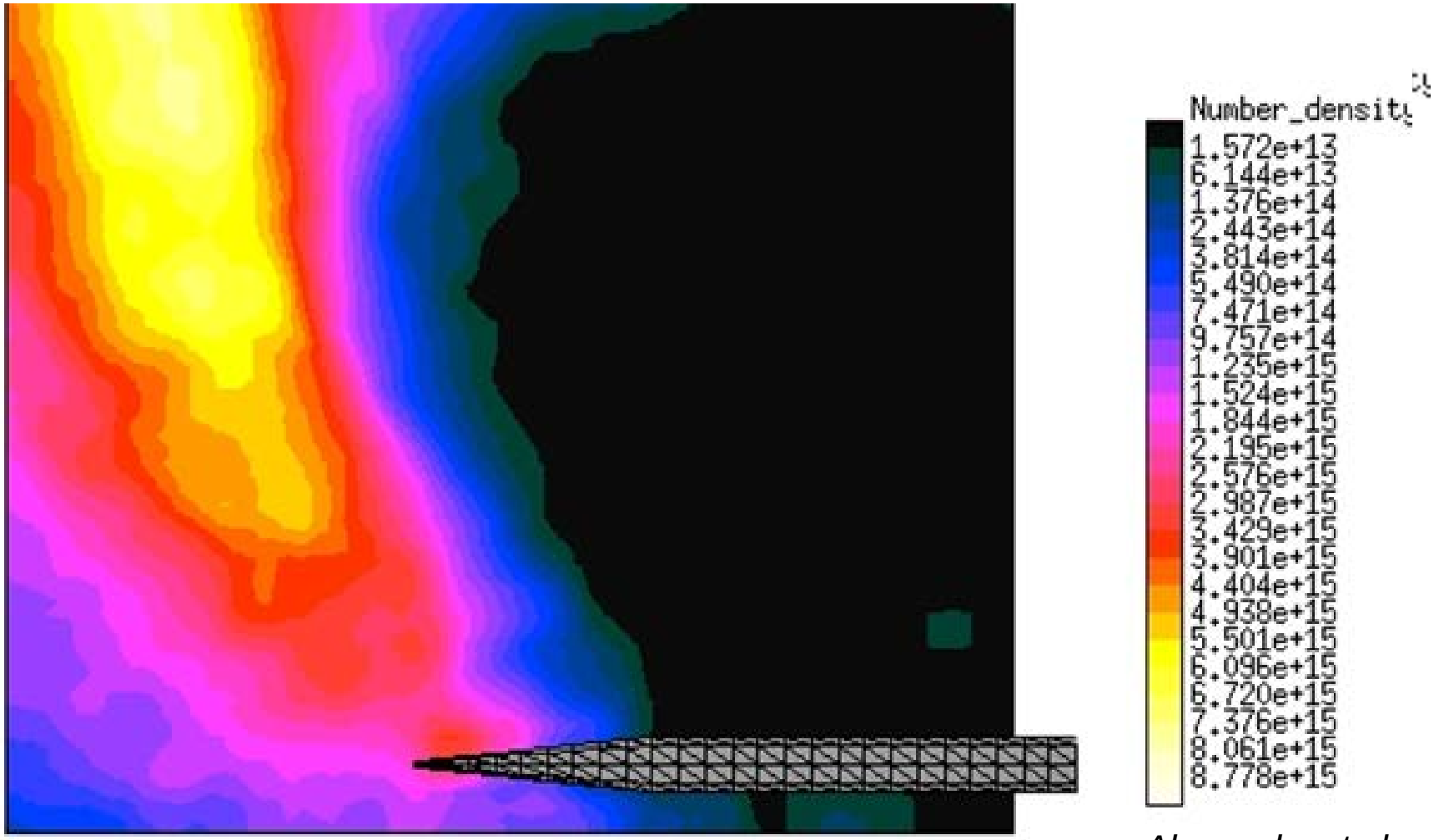

Alexeenko et al.

Summary

- A new and “free” instrument concept for near-real time trajectory reconstruction
- Relies on lab-on-a-chip instruments with processing and power
- Instrument concept with minimal modification to the MSL CBMDs, and EBMDs and multifunctionality
- Fully conforms to the volumetric envelope and no interference to the primary mission systems.
- No recontact risk of modified balanced mass devices and MSL
- Simplification is possible with more simple mass device designs (e.g. spherical, sphere-cone)
- Concept can be readily implemented from ISS-returning vehicles

Acknowledgements

Department of Earth, Atmospheric, and Planetary Sciences, Purdue University

- Prof. David Minton
- Prof. Briony Horgan

School of Aeronautics and Astronautics , Purdue University

- Prof. Michael Grant
- Thomas Anthony (Graduate student)