Jet Propulsion Laboratory
California Institute of Technology

FLIGHT EXPERIENCE OF THE FIRST LOW DENSITY SUPERSONIC DECELERATOR FLIGHT TEST

George Chen
(george.t.chen@jpl.nasa.gov)

Flight System Engineer & Flight Director
Jet Propulsion Laboratory
California Institute of Technology

Copyright 2015. California Institute of Technology. Government sponsorship acknowledged.

LDSD Overview

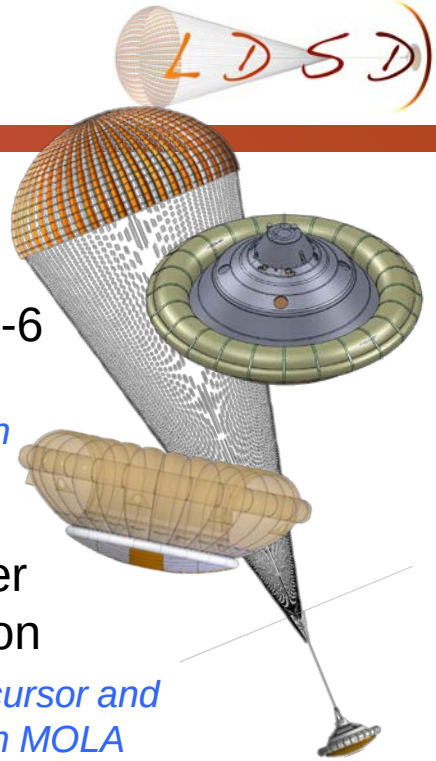

What

Develop new supersonic inflatable decelerator and supersonic parachute technologies to TRL-6

- ➔ *6 and 8-meter diameter Mach 3.5 inflatable decelerators*
- ➔ *30.5-meter diameter Mach 2.5 supersonic parachute with non-mortar deployment*

Why

Artist's Concept

Enable sending larger payloads to higher elevations on Mars, with greater precision

- *2 to 2.7 metric tons for science and human precursor and cargo missions, km's to meters precision, +1 km MOLA*
- *Pave the way for technology development for human missions*

How

Fly them in Earth's stratosphere at supersonic speeds to simulate operation in the thin air of Mars

- ➔ *A high-altitude balloon lofts 3000 kg vehicle with full-scale devices to ~36 km — rocket fires to send it to ~50 km at Mach 4*

When

Three Supersonic Flight Dynamics Tests (SFDT) would be flown in 2014 through 2016

LDSD Supersonic Flight Dynamics Test (SFDT-1) Overview

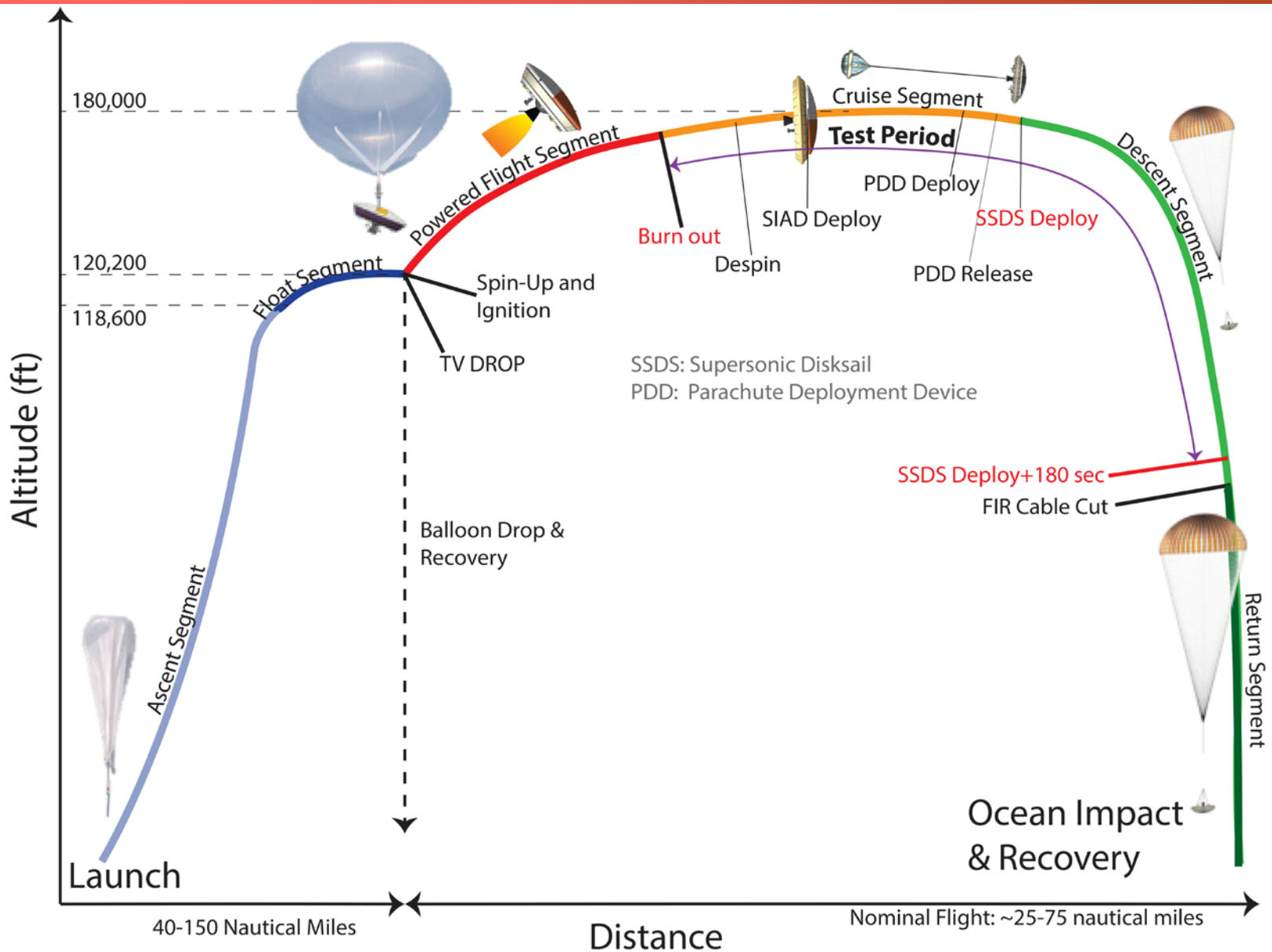

LDSD Test Vehicle

This device is the property of the National Aeronautics and Space Administration (NASA) and contains critical test flight data.	If found, please contact: LDSD Project +1-818-354-4321
Este dispositivo es propiedad de la Administración Nacional de la Aeronáutica y del Espacio (NASA) y contiene información importante de un vuelode prueba.	Si lo encuentra, por favor póngase en contacto con: LDSD Project +1-818-354-4321
這裝置是美國國家航空和航天局（NASA）的財產，包括重要太空飛行資料。	如果找到了，請聯繫：LDSD Project +1-818-354-4321
Это устройство является собственностью Национального управления по воздухоплаванию и исследованию космического пространства (НАСА) и содержит критически важные данные испытательного полета.	Пожалуйста, сообщите о находке: LDSD Project +1-818-354-4321

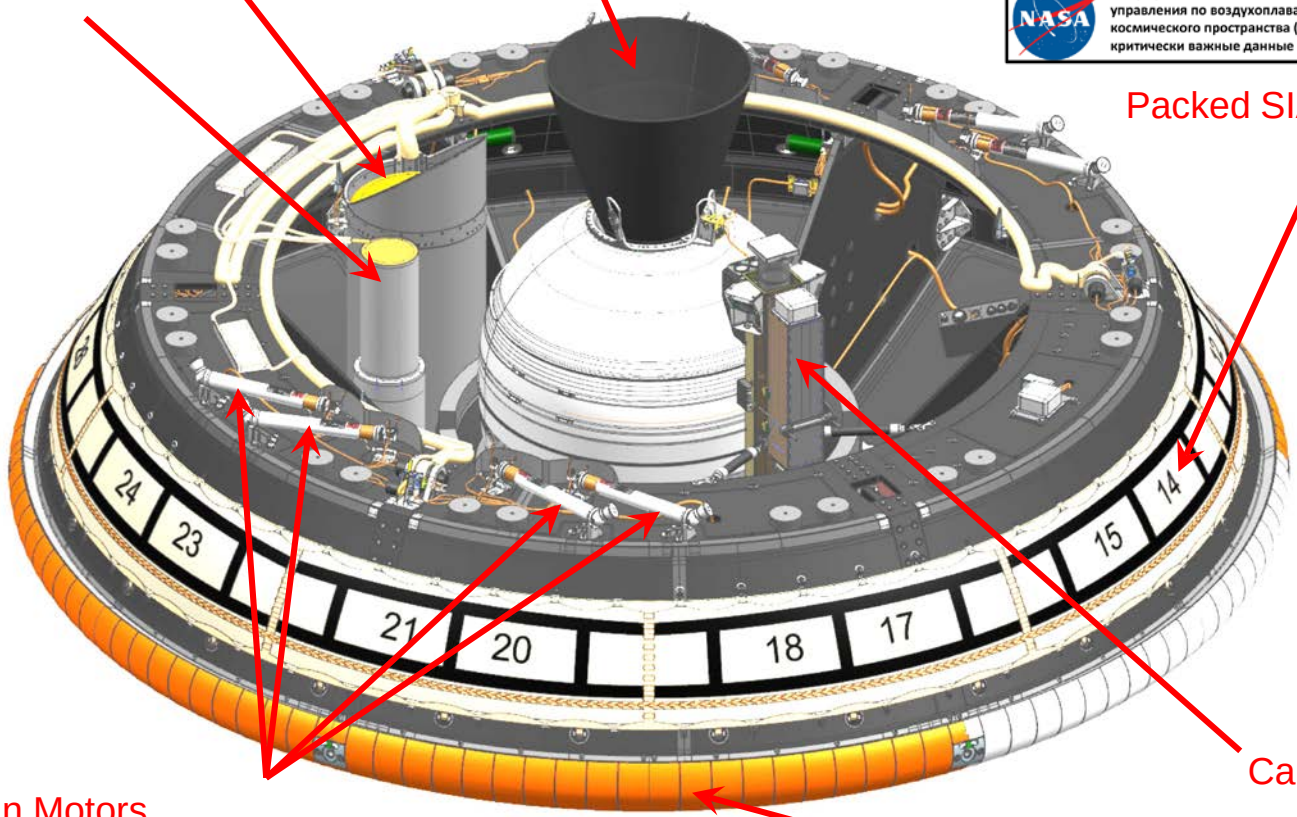

Instrumentation:

- Thermal Sensors
- Pressure Sensors
- Parachute Load Cell
- PDD Load Cell
- IMU
- 8 Cameras
  - 4 SitVids (telemetered)
  - PanCam
  - SIAD Internal Camera
  - HiRes Parchute Camera
  - HiSpeed Parachute Camera

LDSD Test Vehicle on the Balloon

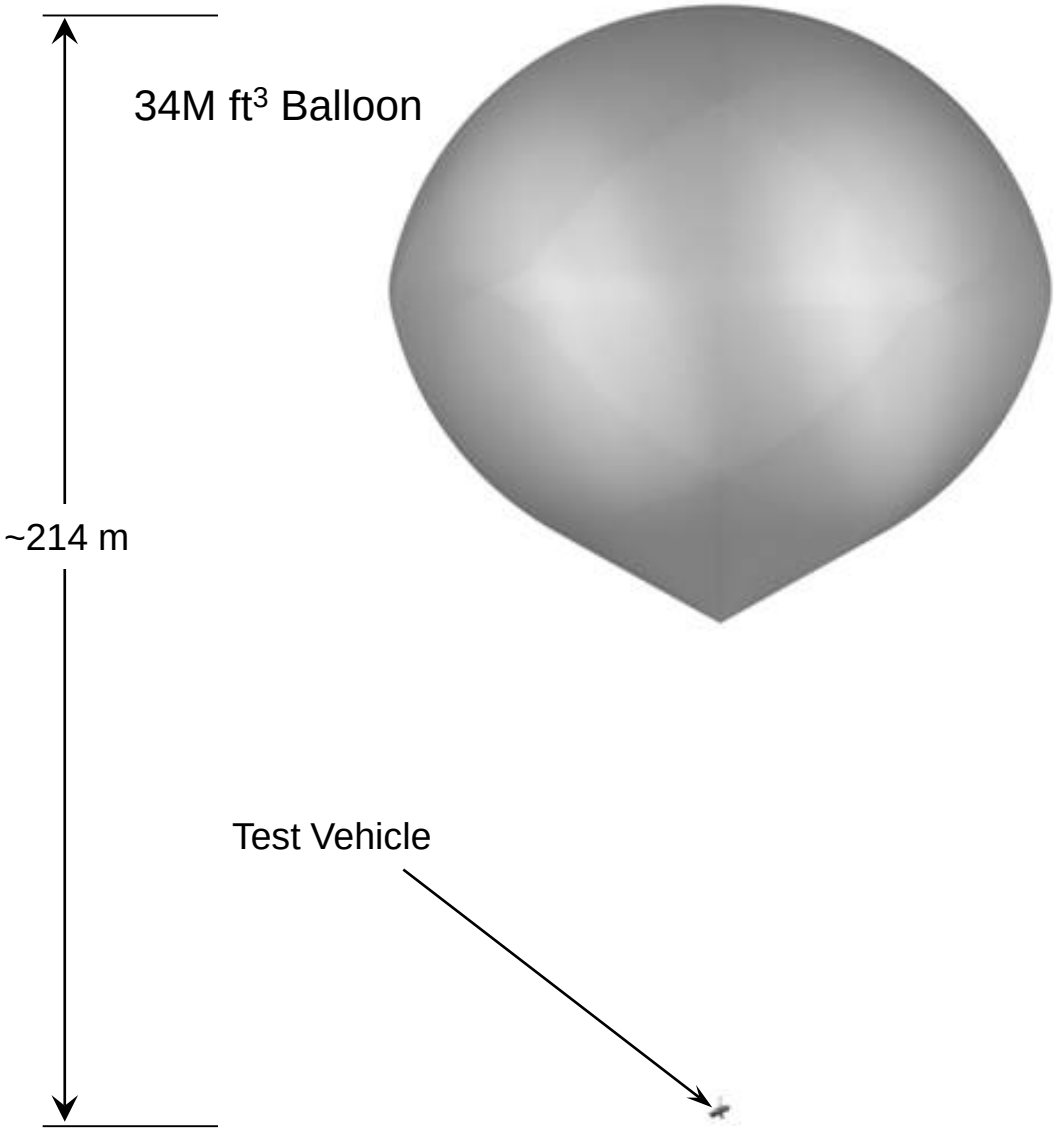

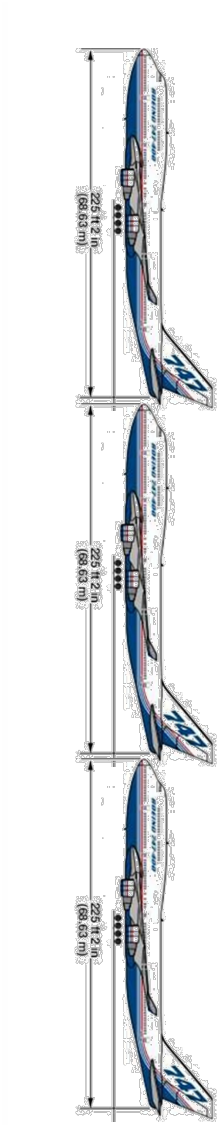

LDSD Test Vehicle on the Balloon

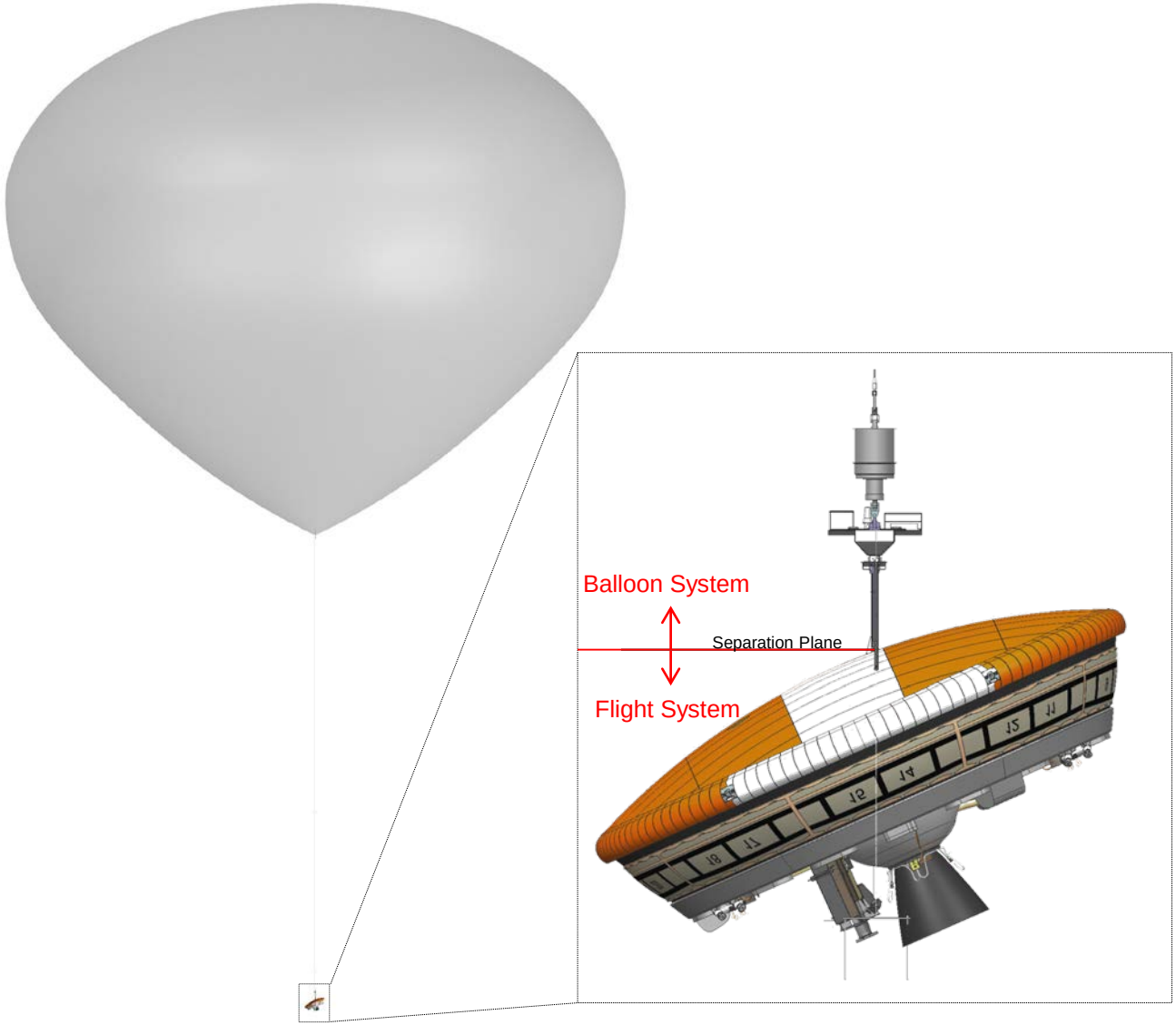

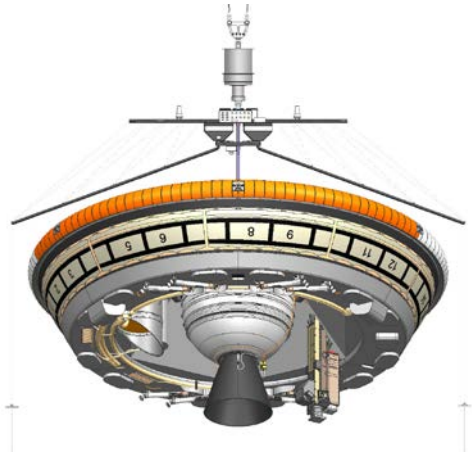

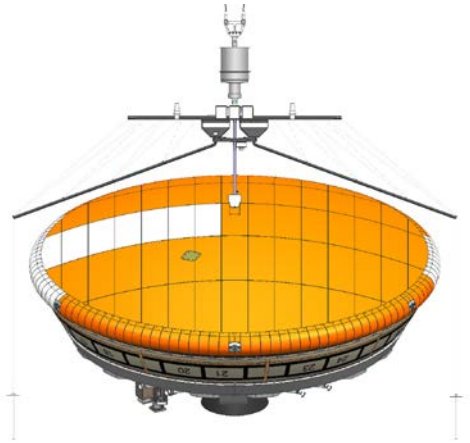

Powered Flight Configuration

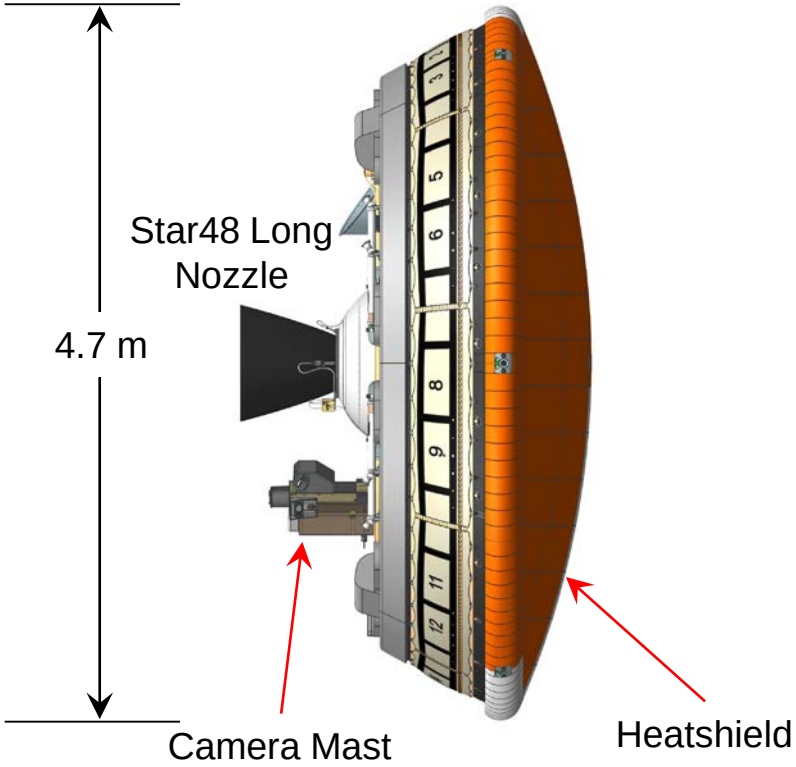

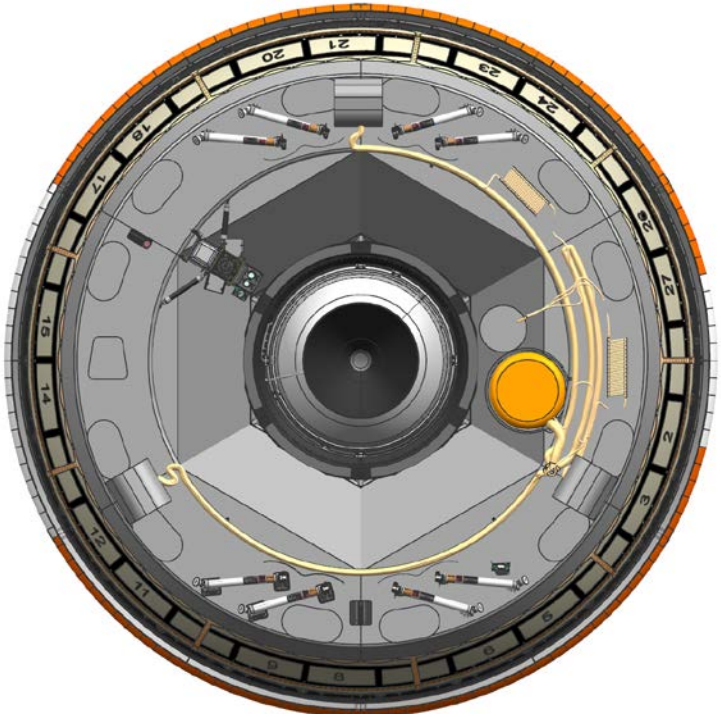

SIAD-R Flight Configuration

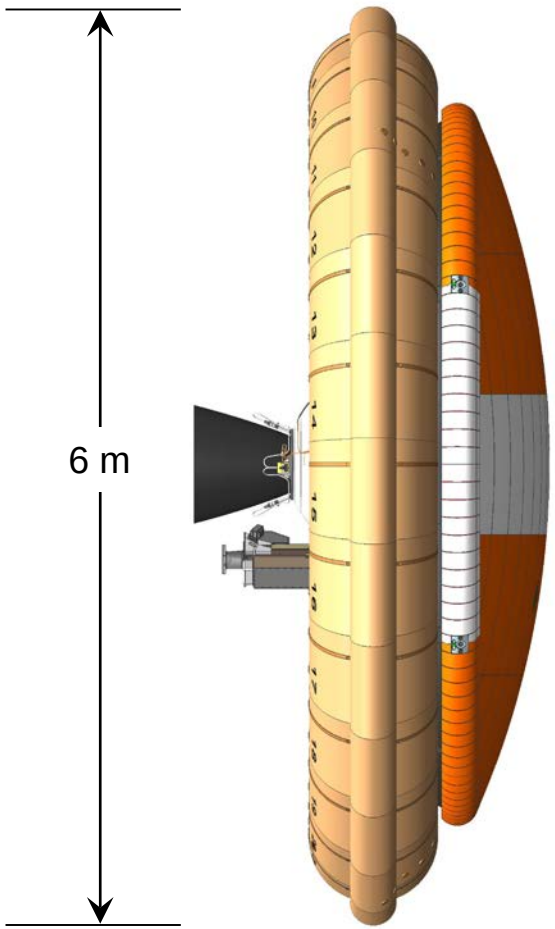

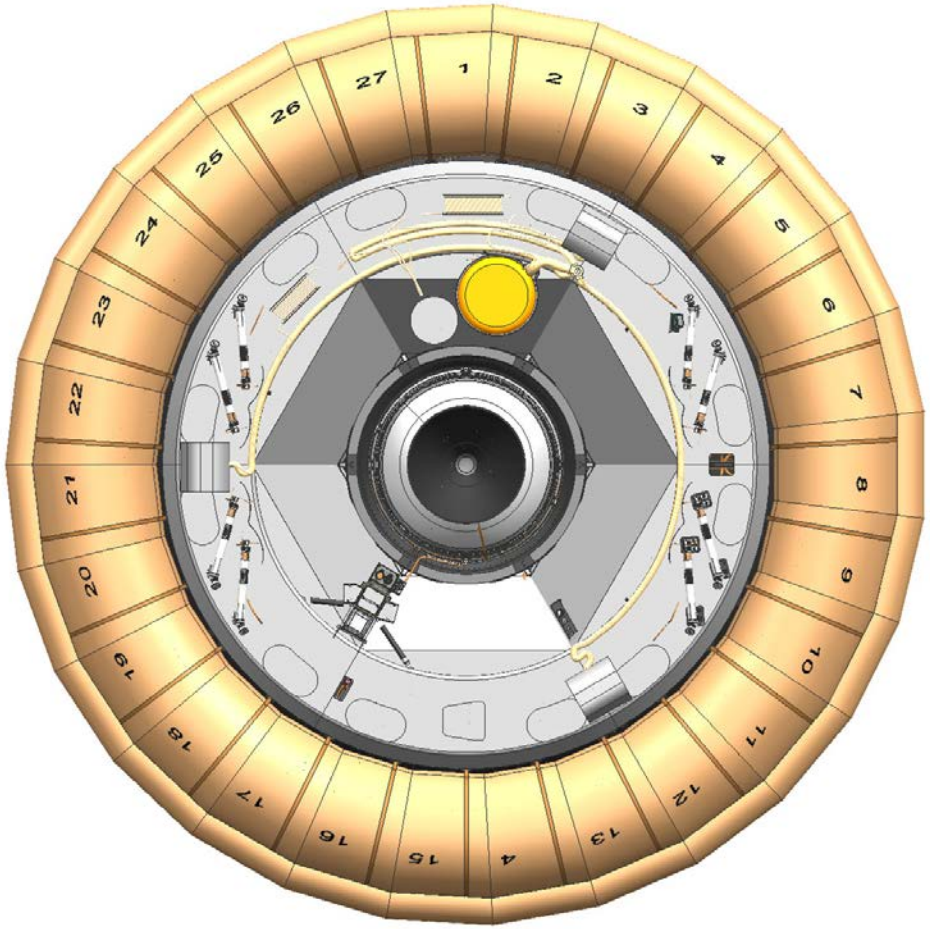

Parachute Flight Configuration

D_0 = 30.5 m

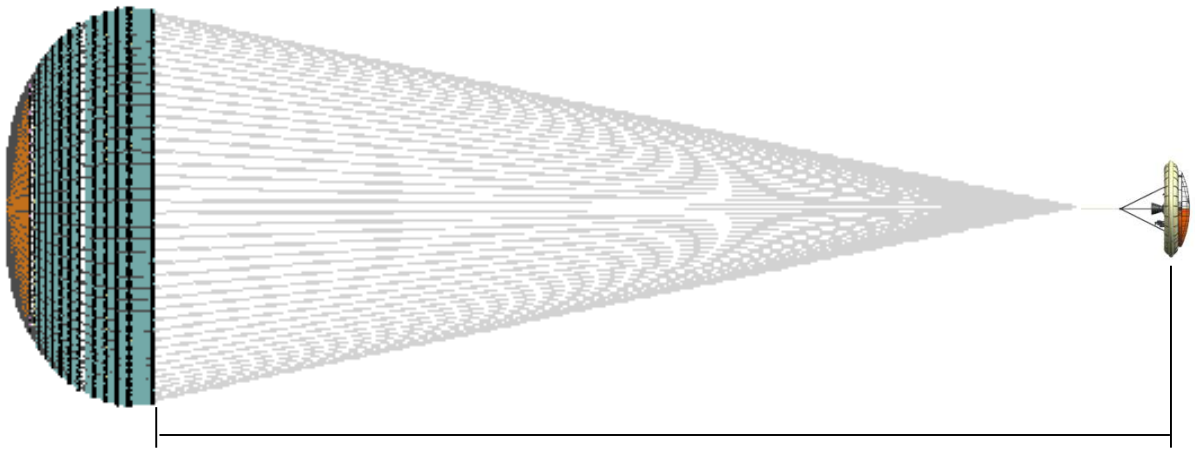

Supersonic Flight Dynamics Test-1

Test Vehicle Recovery

Images courtesy John Gallon

SFDT-1 Flight Dynamics Scorecard

Parameter	Requirement	Requirement Uncertainty Range	As-Flown
Drop Altitude (km)	36.58	36.04-37.17	36.52 km
Residual Spin Rate After Spin Down (deg/s)	<20	n/a	2.50
SIAD Deploy Altitude	n/a	n/a	58.08 km
SIAD Deploy Trigger Mach	3.80	3.55-4.05	4.09
SIAD Dynamic Pressure (Pa)	<2000	n/a	330.24
SIAD Test Time (sec)	>10	n/a	78.41 sec
Parachute Deploy Altitude (km)	n/a	n/a	47.07
Parachute Deploy Mach [Line stretch]	2.50	2.25-2.75	2.55
Parachute Deploy Dynamic Pressure (Pa)	>240	n/a	544.40

SFDT-1 As-Flown Mach-Q Trajectory

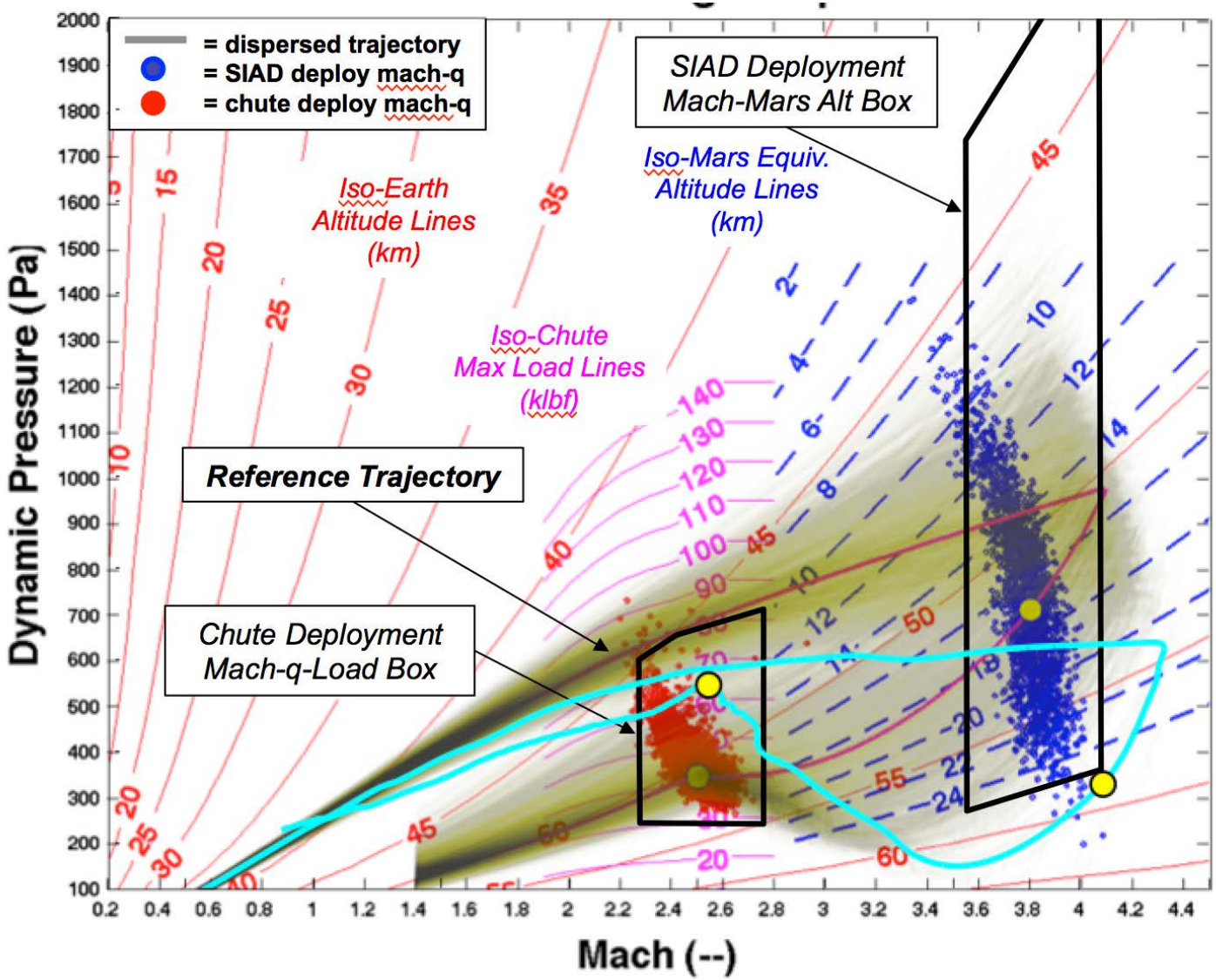

LDSD SFDT-1 Flight Summary

- The first LDSD Supersonic Flight Dynamics Test (SFDT), flown on June 28, 2014, has demonstrated the balloon-launched supersonic test architecture and provided data to improve future flights.
- The flight objectives to launch the system and reach float altitude, drop the test vehicle and conduct the powered flight, return telemetry from the test vehicle, and recover the balloon envelope for disposal were all achieved.
- This test architecture is available to test other decelerator technologies (e.g. isotensoid SIAD, supersonic retro-propulsion, clustered parachutes, etc.) under Mars EDL conditions.

References

Clark, Ian G., Mark Adler, Rob Manning, “Summary of the First High-Altitude, Supersonic Flight Dynamics Test for the Low-Density Supersonic Decelerator Project”, AIAA 2015-2100, 23rd AIAA Aerodynamic Decelerator Systems Technology Conference, Daytona Beach, FL., 2015.

Ivanov, Mark, “Low Density Supersonic Decelerator Flight Dynamics Test-1 Flight Design and Targeting”, AIAA 2015-2152, 23rd AIAA Aerodynamic Decelerator Systems Technology Conference, Daytona Beach, FL., 2015.