ExoMars EDL Demonstrator Module (EDM) Mission and Design Overview

O. Bayle, L. Lorenzoni, Th. Blancquaert, S. Langlois, Th. Walloschek
ESA

S. Portigliotti, M.Capuano
Thales Alenia Space Italy

8th International Planetary Probe Workshop
Portsmouth, VA – June 6-10, 2011

Content

- ExoMars Programme Overview
- ExoMars EDM Mission
- EDM Configuration and Technology Development
- Conclusions – Next steps

ExoMars Programme Objectives

- **Joint ESA-NASA initiative**

- **First missions planned for 2016 and 2018 Launch opportunities**

- **Mission Scientific Objectives**
  - Study Martian atmospheric trace gases
  - Search for signs of past and present life on Mars
  - Investigate geochemical environment in the shallow sub-surface
  - Cache samples for future Mars Sample Return mission

- **Mission Technology Objectives**
  - Entry, Descent and Landing of a payload on the Mars surface
  - Mars surface mobility with a Rover
  - Drill to access Mars sub-surface
  - Sample acquisition, preparation, distribution and analysis

ExoMars 2016 and 2018 Missions

- **2016 Mission**
  - Launch on a NASA Atlas V-431
  - ESA-supplied Trace Gas Orbiter (TGO), including scientific instruments and Telecommunication capability until 2022
  - ESA-supplied EDL Demonstrator Module (EDM)

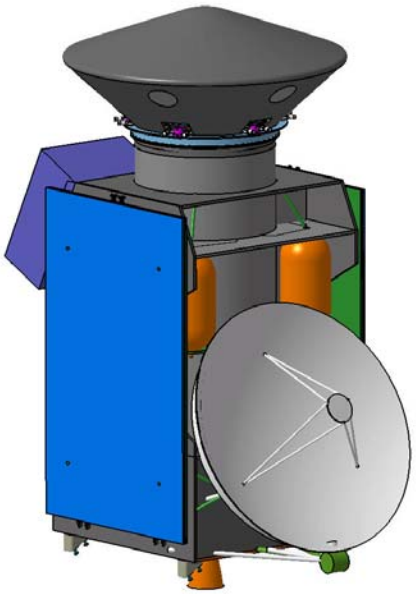

- **2018 Mission**
  - Launch on a NASA Atlas V-551
  - NASA-supplied Carrier and EDL (MSL derivative)
  - Joint ESA-NASA Rover

ExoMars 2016 Mission Overview

LAUNCH

ExoMars SCC in launch configuration

Atlas V 431

INTERPLANETARY CRUISE

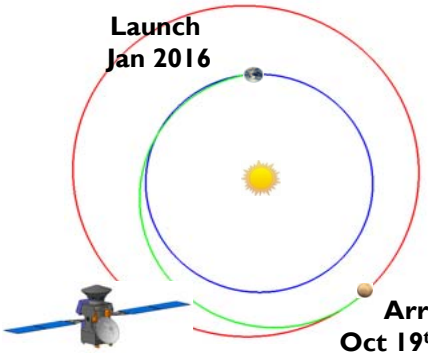

Type II, C3 = 7.44 km^2/s^2

APPROACH, EDM RELEASE & MOI

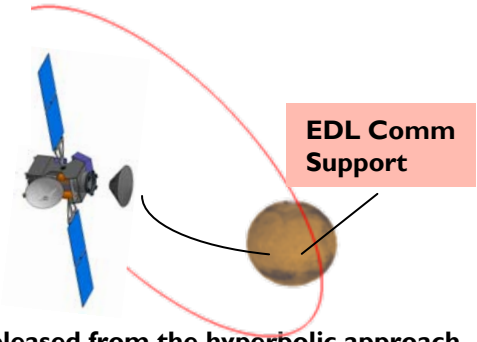

(1) EDM released from the hyperbolic approach 3 days before MOI
(2) Orbiter performs retargeting and MOI into 4 sol orbit (inclination compatible with target landing site)

EDM RELAY & TRANSITION TO 1-SOL ORBIT

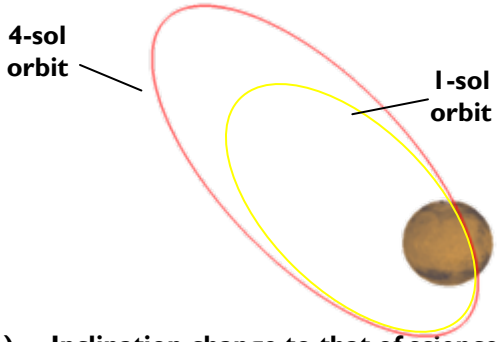

(1) Inclination change to that of science orbit (74°±10°)
(2) Apoares reduction to 1 sol

AEROBRAKING & SCIENCE PHASE

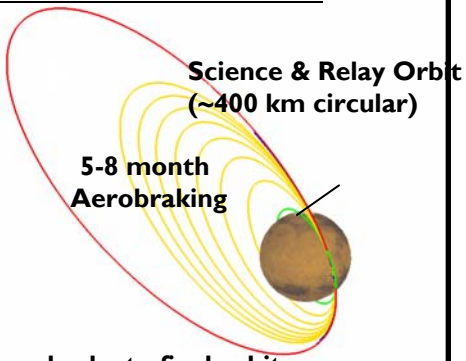

(1) Aerobrake to final orbit
(2) Start of Science Phase

DATA RELAY PHASE

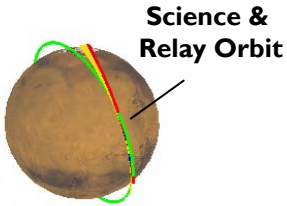

(1) Data relay for 2018 Rover starts in Jan 2019
(2) Data relay capability for future Mars surface assets throughout 2022

EDM Technology Objectives

- **Design, develop and flight-demonstrate key technologies for EDL on Mars (inherited from technologies identified in previous ExoMars single-mission concept):**
  - Heat Shield
  - Parachute System
  - Doppler Radar system
  - Liquid propulsion system
  - Impact attenuation system

- **Measure and transmit back to Earth engineering data for post-flight analysis**
  - EDM shall provide flight measurements allowing reconstruction of:
    - Flown trajectory
    - Thermo-mechanical loads during EDL
    - Performance of the EDL subsystems
  - EDM mission shall allow for data transmission to Earth

EDM Scientific Objectives

- **EDM offers limited resources for science instruments (3 kg) and a short lifetime on Mars surface (4 sols) because of its lack of long-term power supply**
- **Announcement of Opportunity released in Nov. 2010**
  - Provide in-situ measurements of Mars atmospheric characteristics during the Global Dust Storm Season, e.g.:
    - Temperature
    - Pressure
    - Winds
    - Humidity
    - Dust environment
  - Improve our understanding of temporal and spatial variability of the Mars atmosphere
- **Instruments selection announced on June 10, 2011**

EDM Mission Scenario (1)
Coast Phase

- **Coast Phase is the autonomous EDM flight between separation from the TGO and entry in Mars atmosphere**

- **EDM is separated from the TGO by a 3-point spin-up mechanism, that provides 2.5 rpm spin rate**

- **Coast Phase duration is a compromise:**
  - As long as possible to give time to TGO to prepare for MOI
  - As short as possible to avoid severe consequences on the EDM design:
    - Large dispersions at entry
    - Mass increase for large energy demand (primary batteries)

- **Coast phase duration = 3 days:**
  - EDM systems move to hibernation mode shortly after separation in order to save electrical power
  - EDM awaken about 1 hour before entry, needs to rebuild inertial attitude reference (dedicated sun sensor)

EDM Mission Scenario (2)
EDL in Global Dust Storm Season

- **T2 transfer in 2016 implies arrival at Mars at solar longitude Ls=244, i.e. in the middle of the Global Dust Storm Season**
- **High probability to encounter Global Dust Storm is accounted for in the EDM design:**
  - Larger variability in Atmospheric density and temperature
  - Erosion of Front shield accounted in TPS sizing (several WTT were performed in DLR)

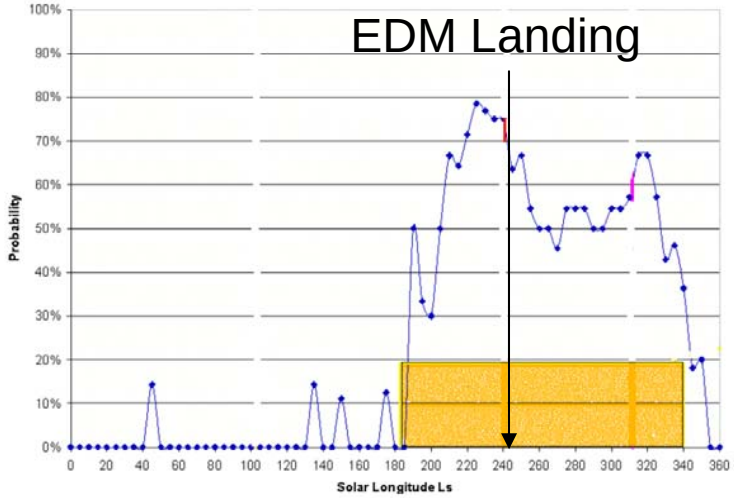

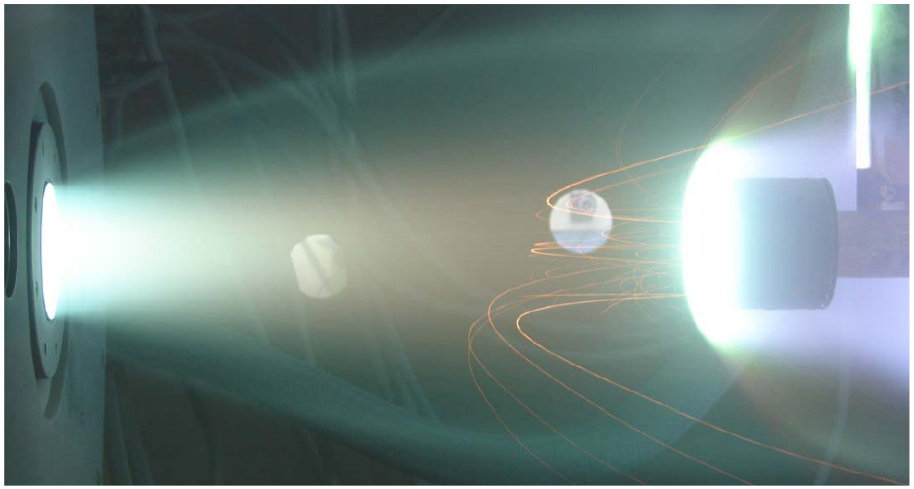

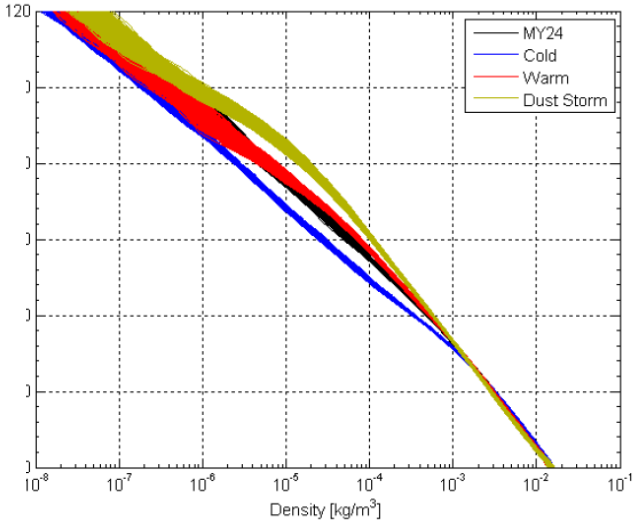

EDM Mission Scenario (3)
Entry and Descent

- **Target Landing Site in Meridiani Planum (6.1ºW-1.8ºS)**
- **Entry conditions**
  - Maximum relative velocity = 5.83 km/s
  - Entry FPA = -12.4 deg
  - Entry corridor > 1.1 deg (dispersions at entry +/- 0.3 deg)
- **12 m DGB deployed at Mach [1.8-2.1]**
- **Front shield jettisoned on timer**
- **Doppler Radar acquires ground relative position and velocity**

- ***See R. Haya Ramos presentation in Session 2***

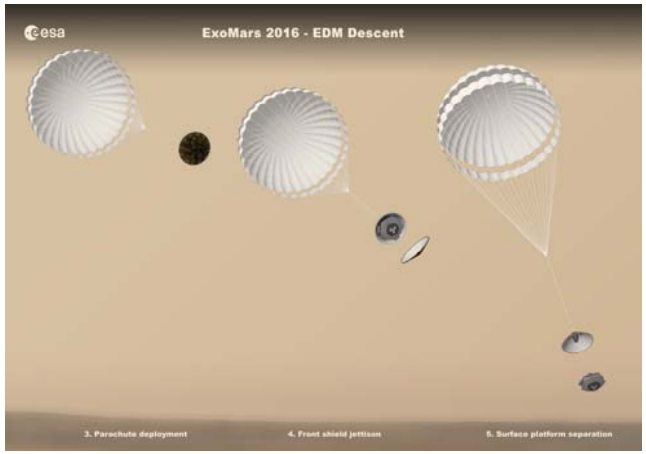

EDM Mission Scenario (4) Landing

- EDM Surface Platform separates from Backshell at about 1400 m altitude
- Final braking by 9 hydrazyne thrusters (Astrium CHT-400), operated in pulse-modulation
- Thrusters shut down 1.5 m from terrain
- Final free fall and impact attenuated by a layer of crushable material
- Crushable material was selected:
  - Low mass and cost
  - Simple design
  - Leaves platform close to the ground for surface access to scientific instruments (or rover egress for future missions)

EDM Mission Scenario (5)
Surface Mission

- **EDM lifetime on Mars surface limited by the capacity of primary batteries (currently estimated at 8 sols)**

- **EDM systems will be in hibernation mode most of the time on the Surface, leaving the Scientific instruments perform autonomously their mission**

- **EDM functions on the surface limited to:**
  - Ensure initiation of scientific instruments
  - Gather and store scientific data
  - Ensure data transmission to the available Orbiters

EDM Configuration

- **Mass properties:**
  - EDM = 600 kg
  - Surface Platform = 300 kg
  - Propellant = 32 kg
  - CoM < 27%.Diameter

- **Main dimensions:**
  - EDM Diameter = 2.4 m
  - Surface Platform = 1.7 m
  - Front cone = 70 deg
  - Back cone = 47 deg

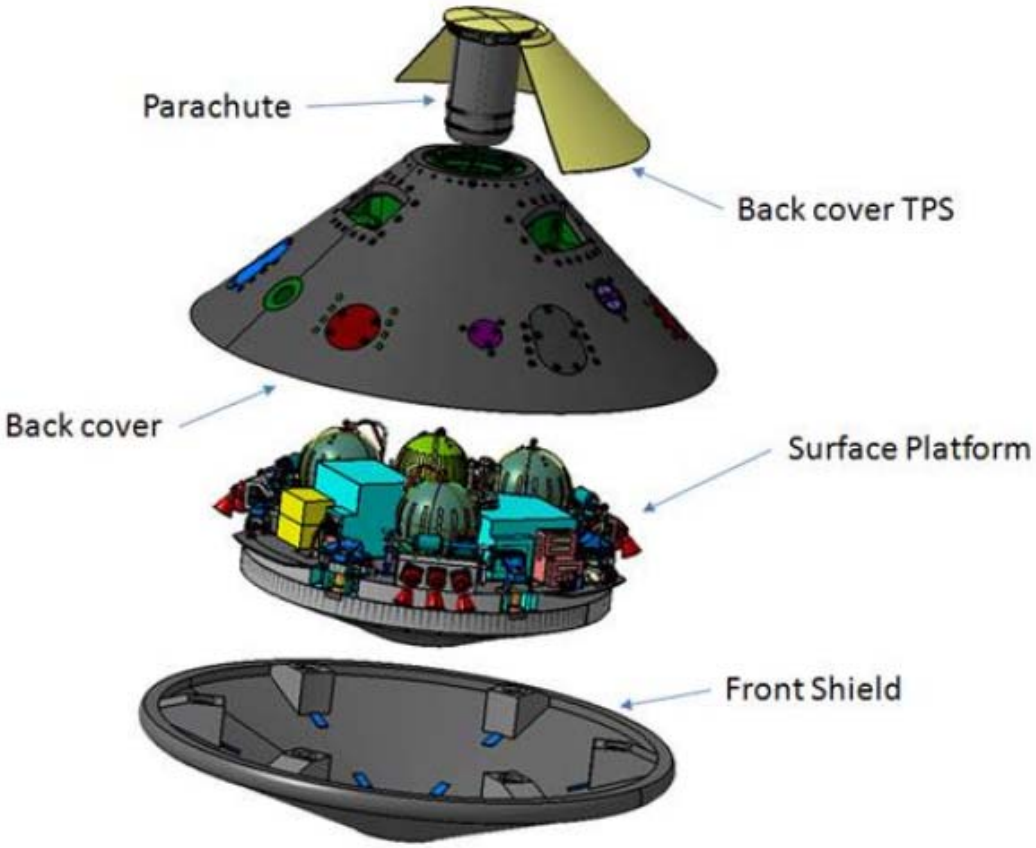

Technology Development (1) Aerothermodynamics

- **Complete campaign of experimental and numerical characterisation has been performed**
  - High enthalpy WTT
    - ONERA F4
    - DLR HEG
  - Hypersonic cold WTT
    - ONERA S4
  - Turbulent Heat Flux
    - DLR TMK and H2K
  - Dynamic stability in transonic
    - Free oscillations in DLR TMK
    - Ballistic range in ISL
  - Subsonic tests in NLR HST
- **Final Aerodynamic and Aerothermodynamic Data Bases have been released**
- **Large margins still considered (super-catalicity, turbulence, roughness)**

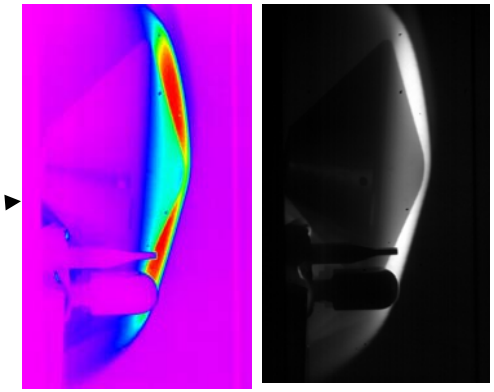

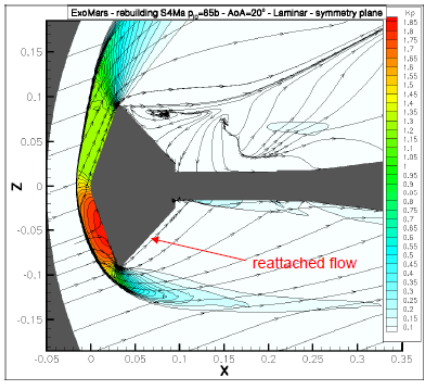

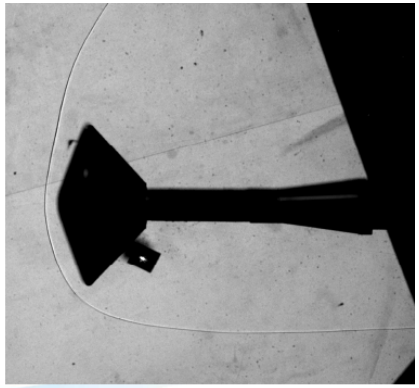

Technology Development (2)
Thermal Protection System

- **TPS material is Norcoat-Liege for both Front and Back Shields**
- **Heritage from ARD, Beagle2 and Netlander**
- **Material qualification limit successfully increased to 2 MW/m2**
- **Several additional plasma tests were performed to:**
  - Compare Air and CO2 flows
  - Determine a detailed ablation model
  - Verify TPS performance on the Backshield
- **TPS flight instrumentation**
  - Thermal plugs
  - Pressure sensors

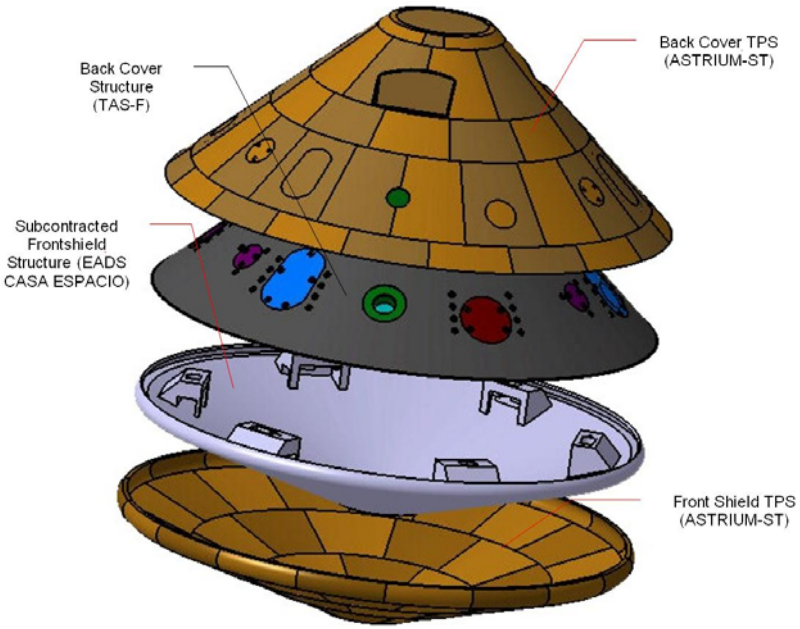

- ***See H. Ritter presentation in Session 7A***

Technology Development (3)
Parachute System

- **Parachute geometry scaled from Huygens designs - 12 m diameter**
- **Mortar deployed at Mach [1.8-2.1]**
- **Break-out patch decelerated by drogue parachute**
- **Performed tests:**
  - Material tests
  - Bag extraction tests
- **Planned tests:**
  - Mortar tests (end-2011)
  - Supersonic WTT in GRC10x10
  - High Altitude Drop Tests campaign in Esrange (2012) – Nominal load and overload
  - Low altitude drop test for BoP drogue

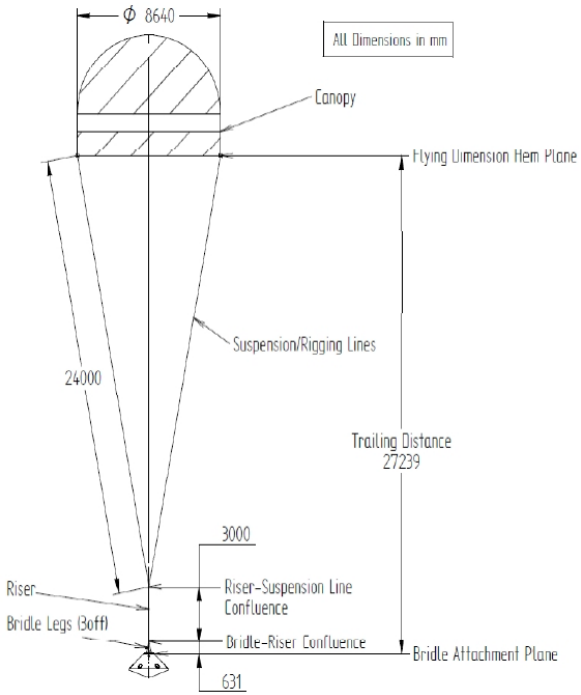

Technology Development (4)
GNC System

- **Major functions**
  - Determine the time for parachute deployment, based on acceleration measurements
  - Command and control the final descent to the surface
- **Current performances compliant with requirements**
- **Sensors**
  - IMU (LN-200)
  - Radar Doppler Altimeter (new development) in Ka band
    - Several breadboard tests successfully conducted
    - Field test planned in 2012

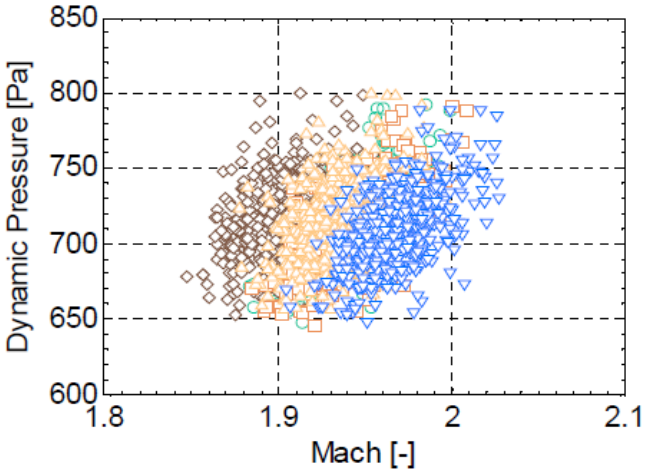

Landing phase GNC performance

	GNC Performance	Landing System Requirement
Altitude error	0.70 m	1.25 m
Vertical velocity error	0.51 m/s	1 m/s
Horizontal velocity error	1.05 m/s	2 m/s
Attitude	4.9 deg	9 deg
Angular rate	7.4 deg/s	11 deg/s

- ***See S. Portigliotti presentation in Session 4***

Technology Development (5)
Propulsion System

- **Based on 9 hydrazyne thrusters operated in pulse modulation**
  - CHT400 from ASTRIUM
  - 400 N thrust
  - 3 clusters of 3 thrusters
  - 5 Hz operation

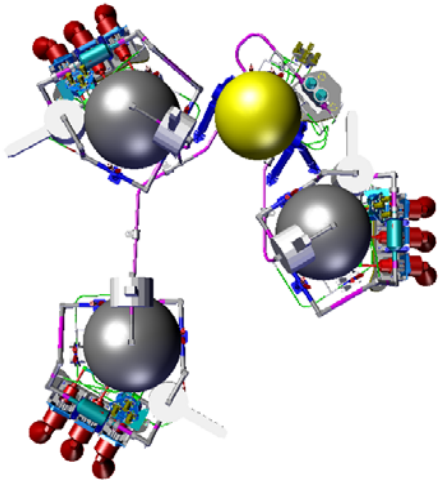

- **Designed with 3 independent PIA branches:**
  - No coupling between clusters
  - No propellant migration
  - Simpler AIV

- **All components are off-the-shelf or require minor modification (e.g. propellant tank diameter tuning)**

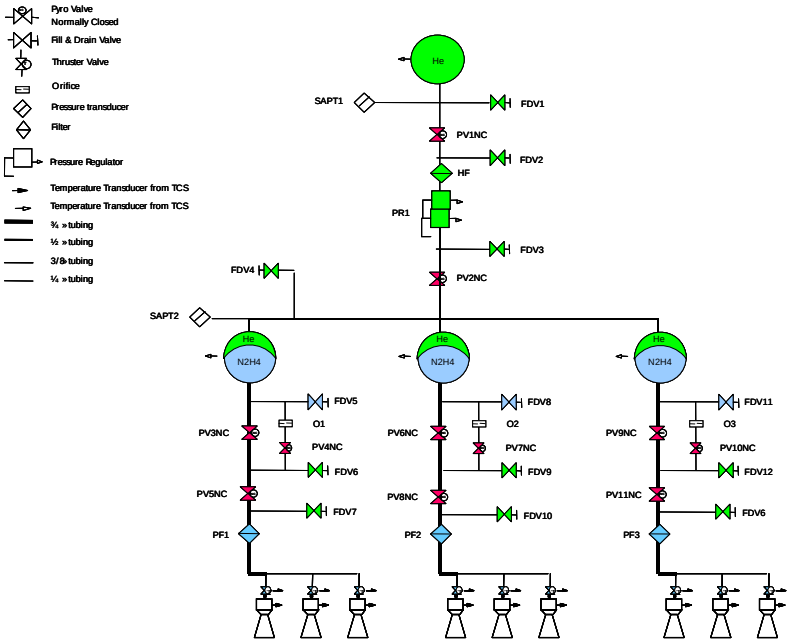

Technology Development (6) Propulsion System (cont'd)

- Thrusters successfully tested at 5 Hz and thrust models used in GNC analyses
- Incremental verification approach for the complete RCS

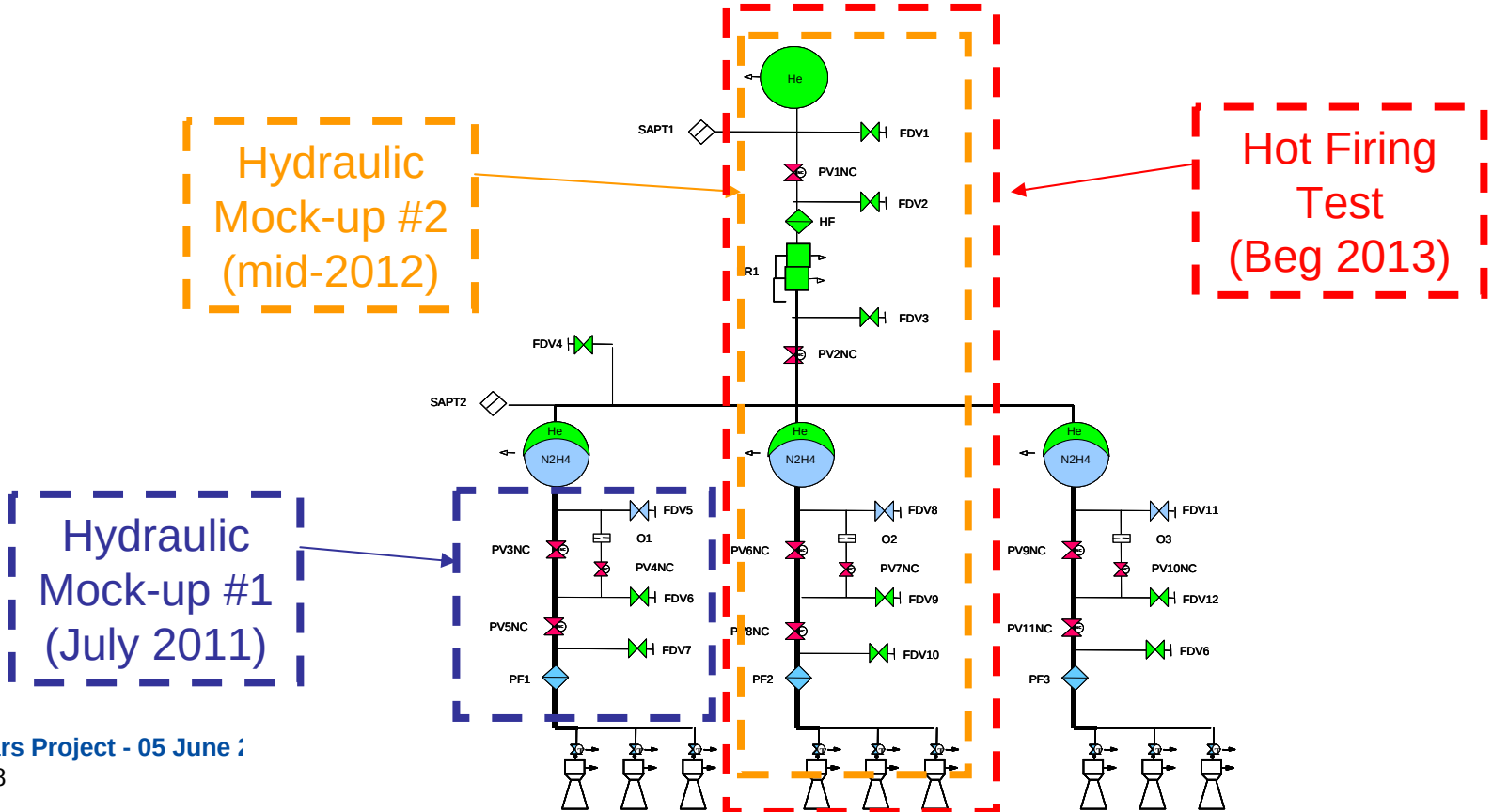

Technology Development (7)
Landing System

- Landing attenuation system based on Crushable material
- Design is constrained by the Surface Platform configuration and equipment present beneath the platform
- Design shall comply with impact velocity up to 4.2 m/s and maximum load of 40g
- Material sample tests on-going
- Full scale impact tests planned in September 2011

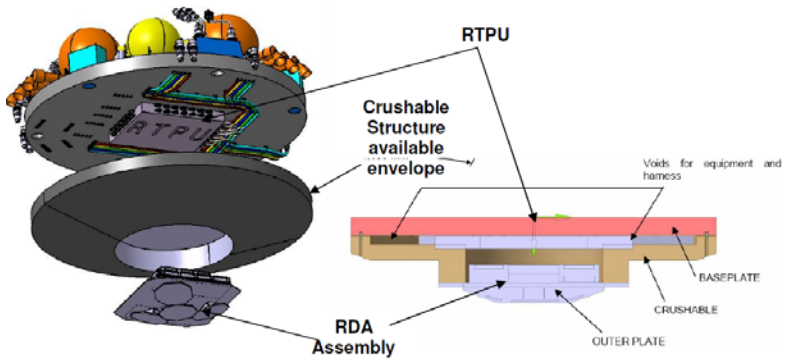

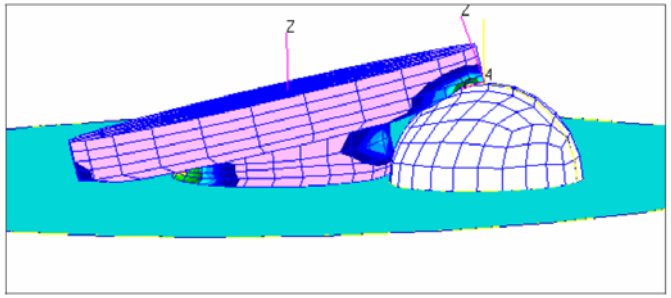

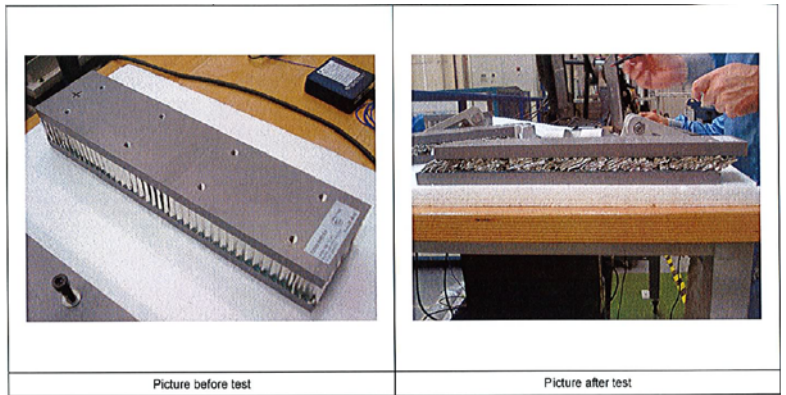

Summary – Next Steps

- **EDM successfully completed its PDR end 2010**
- **All EDL technologies are progressing**
- **Subsystems PDRs are on-going and will be completed in 2011**
- **>90% of suppliers are on-board**
- **Significant test campaigns will take place before end-2012 in order to demonstrate all critical EDL technologies**
  - Parachute supersonic WTT and HADT
  - Propulsion System hot firing test
  - Radar Doppler Altimeter field test
  - Crushable platform full scale tests
- **EDM CDR planned end 2013**

Back-up

EDM Mission Scenario Communications

- **UHF communication is ensured during all phases of EDM Mission:**
  - To TGO during the Coast phase for house-keeping data transmission
  - To TGO during EDL phase for essential telemetry (needed for post-flight analysis in case of unsuccessful landing (NASA Orbiters could be used aswell)
  - To NASA Orbiters during the Surface phase

- **Data volumes:**
  - EDL Engineering and house-keeping data: 100 Mbit
  - Scientific data: 50 Mbit