Conformal Ablative Thermal Protection System for Small and Large Scale Missions: Approaching TRL 6 for Planetary and Human Exploration Missions and TRL 9 for Small Probe Missions

R. A. S. Beck[1], M. J. Gasch[1], F. S. Milos[1], M. M. Stackpoole[1], B. P. Smith[1], M.R. Switzer[1], E. Venkatapathy[1], M. C. Wilder[1], T. Boghhozian[2], J. F. Chavez-Garcia[2], T. Gokcen[2], D. K. Prabhu[2],G. T. Swanson[2], C. D. Kazemba[3], W. Congdon[4], D. DePasquale[5], B. A. Woollard[6], A. Sidor[6]

[1] NASA Ames Research Center, Moffett Field, CA 94035
[2]ERC @ NASA Ames Research Center, Moffett Field, CA 94035
[3]STC @ NASA Ames Research Center, Moffett Field, CA 94035
[4]Applied Research Associates (ARA) Ablatives Laboratory (ABL), 14824 E. Hinsdale Ave., Unit C, Centennial, CO 80112
[5]Terminal Velocity Aerospace, LLC, 75 5th Street NW, Suite 244, Atlanta, GA 30308
[6]Georgia Institute of Technology, North Avenue, Atlanta, GA 30332

IPPW-12, Cologne, Germany
June 2015

www.nasa.gov/directorates/spacetech/game_changing_development

CA-TPS: The Problem – The Solution

Problem: Current SOA materials require complicated installation techniques and/or high touch labor costs, with adequate thermal and poor-to-moderate mechanical performance

Solution: Develop a conformal TPS ablator with a significantly lower areal mass and more compliant for ease of integration (direct bonding, no gap fill)

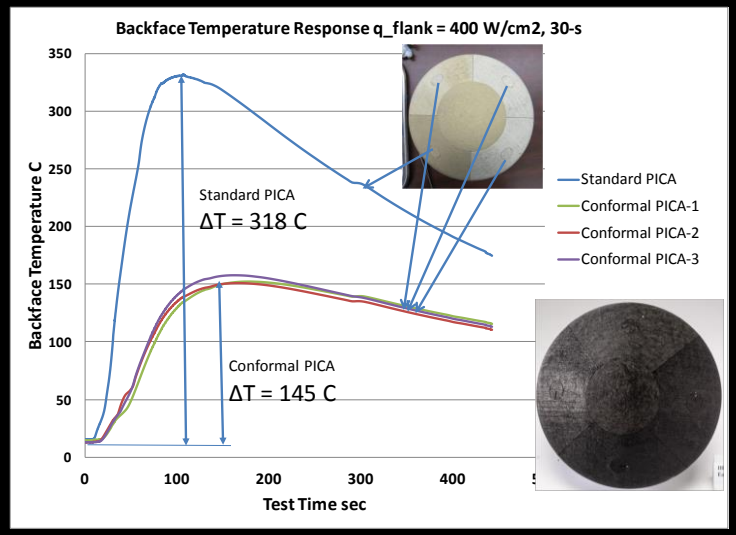

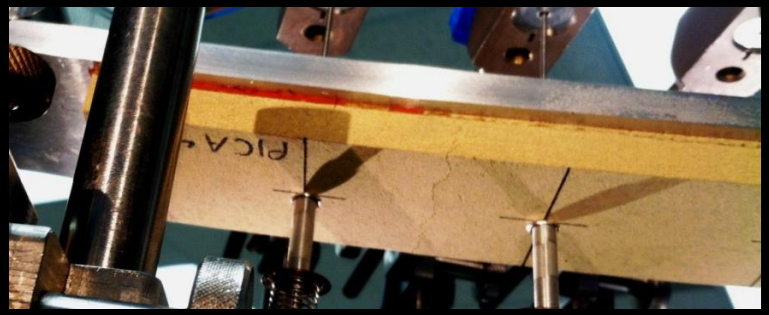

PICA abrupt failure at ROC ~145"
C-PICA no failure at ROC <65"

Materials response models tested – $\Delta T = \Delta T_{PICA}/2$
Tested at 40<q<400 W/cm2 in shear
Seam development models tested no gaps

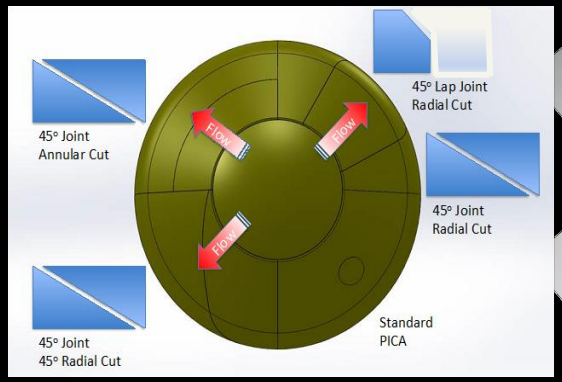

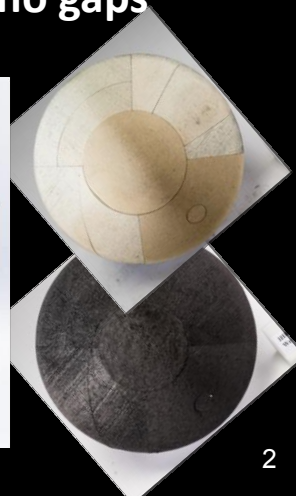

What Makes it Conformal?

- Conformal ablator definition
  - Based on a flexible reinforcement (felt) instead of rigid
    - Allows for large geometry segments (broad goods)
  - Drape-able or formable during processing for easy integration
    - Provides lower thermal conductivity in complex curved regions due to fiber alignment
  - Processed in a mold
    - Results in near net shape rigid part
    - Machines easily
  - Favorable/improved strain-to-failure over PICA
    - Eliminates need for strain isolation pads (direct bond to substrate)
    - Simplifies gore-to-gore geometries and allows gore-to-gore bonding (gap fillers eliminated)

CA-TPS TRL Progression

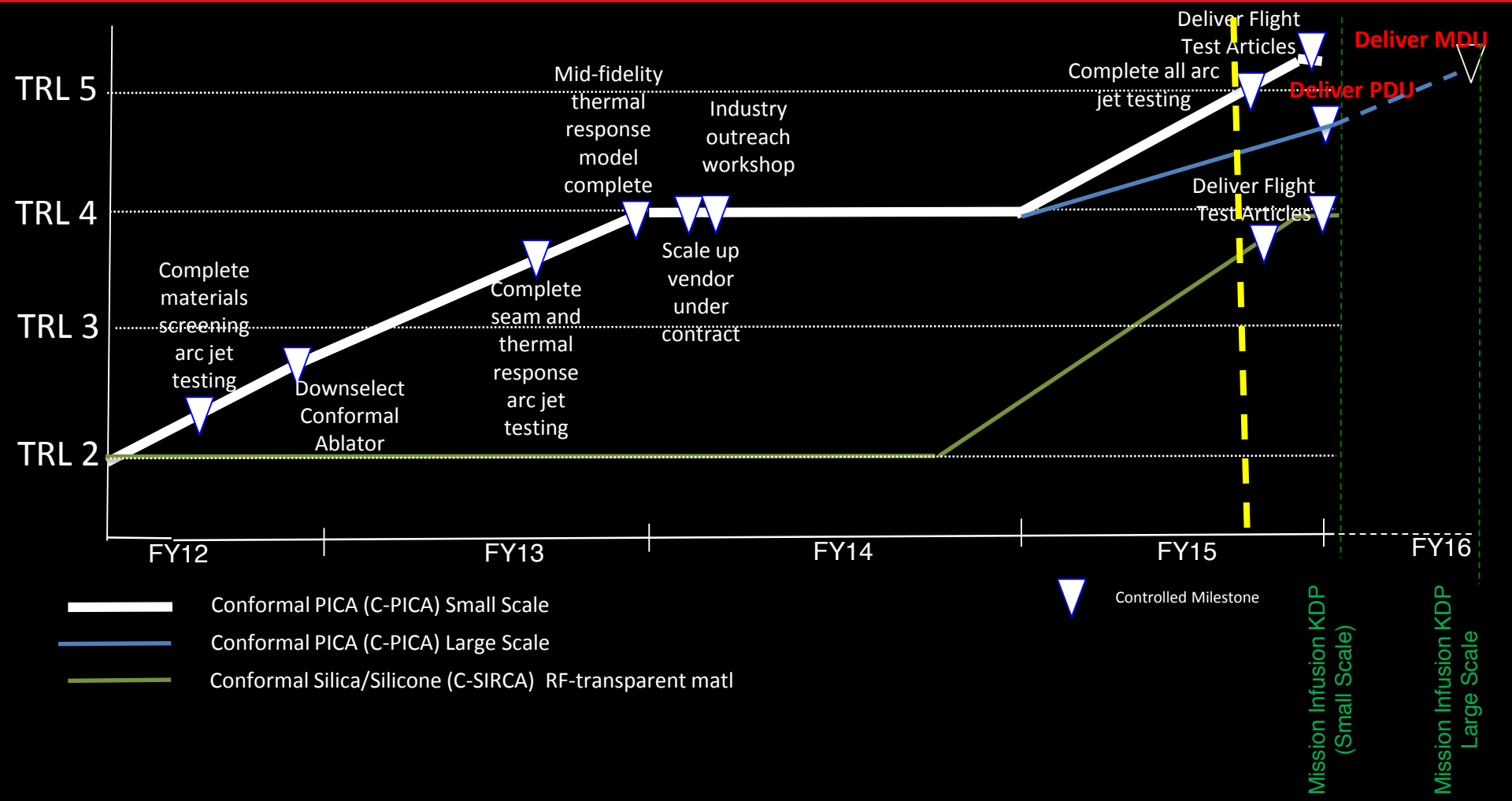

Conformal PICA (C-PICA) Small Scale

Conformal PICA (C-PICA) Large Scale

Conformal Silica/Silicone (C-SIRCA) RF-transparent matl

CA-TPS Mission Infusion Efforts

Small Probe Development with Terminal Velocity Aerospace

Design and Hardware Roles and Responsibilities

- Partnership: 2 test flight articles to be built and flown
- Small probe vehicle initially designed for break-up evaluation
- Designed for heating up to ~400 W/cm2 on nose
- Data telemetered to Iridium
- TVA responsible for entire design with Ames responsible for TPS selection and sizing
- Ames manufacturing and instrumenting all TPS and bonding to TVA aeroshells
  - Backshell TPS – RF transparent Silica/silicone (C-SIRCA)
  - Heatshield TPS – Conformal PICA

CA-TPS Mission Infusion Efforts

Small Probe Development with Terminal Velocity Aerospace

Arc Jet Test Article Design and Build

- Vehicle and arc jet test article configuration iterations completed
  - Trajectory analyses performed, environments defined, TPS sizing completed
- TPS parts designed
- TPS processing molds designed and manufactured
- Segments processed and in for machining

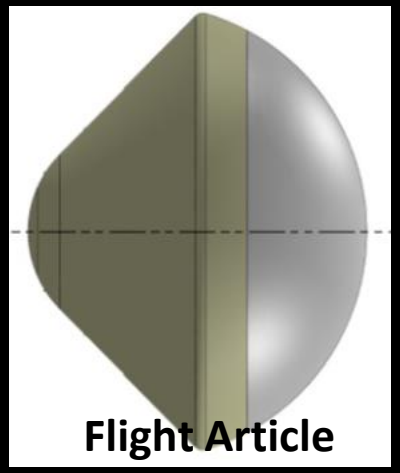

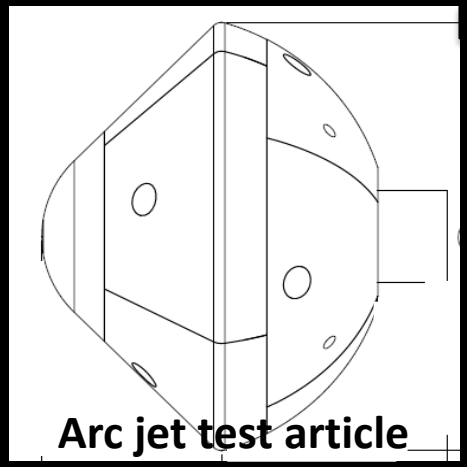

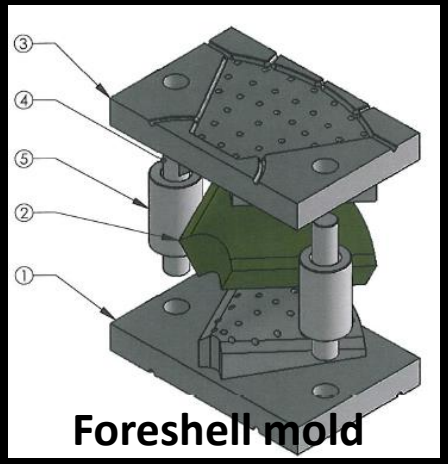

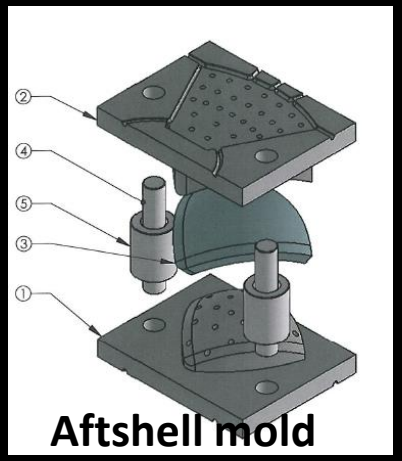

Chance to "test as you fly"

CA-TPS Mission Infusion Efforts

Small Probe Development with Terminal Velocity Aerospace

Arc Jet and Vibe Testing Efforts

- Arc jet test planning completed
  - Arc jet environments defined
    - 2 conditions: match peak flight heatflux and peak flight heatload
  - Arc jet aeroshells received from TVA
  - Testing scheduled fall 2015

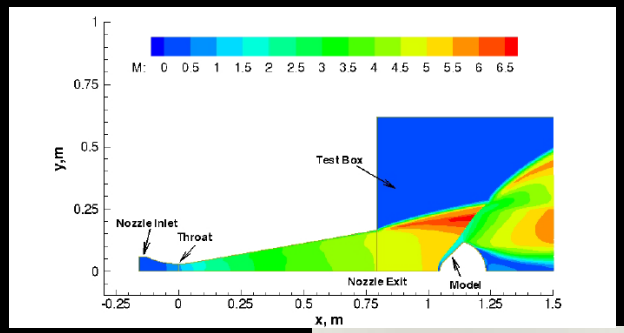

- Vibe test planning underway
  - Testing PICA (for comparison), C-PICA and C-SIRCA
  - Test fixture designed
  - Fixtures and specimens in manufacturing
  - Testing scheduled in July

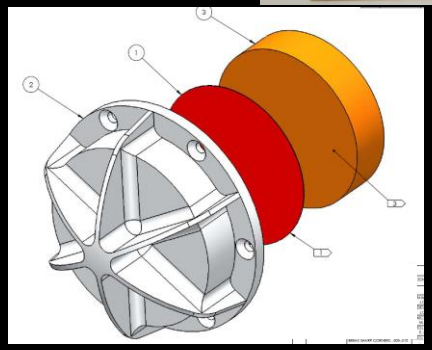

TVA RED-Data2 will fly late CY17

CA-TPS Scale-Up – Step 1

Vendor Demonstration of C-PICA Processing (Small articles)

- Partnership with Industry to prove scalability
- Partnership #1: Material processing duplicated on small scale by Applied Research Associates, Ablative Laboratory (ARA-ABL)
- NASA provided molds and process descriptions used and first parts produced
  - Flat panels for characterization
  - Molded parts for use on arc jet test models
- NASA process duplicated with no changes provided delivered parts
- Testing to occur late June

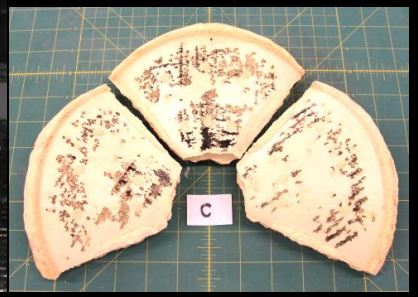

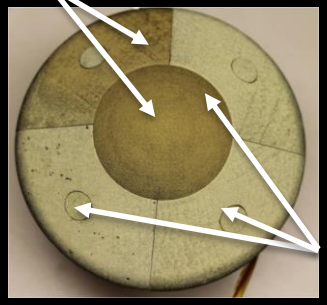

- Partnership # 2 with AFFCO (felt maker) to make 4” rayon felt, carbonized to ~3” thick

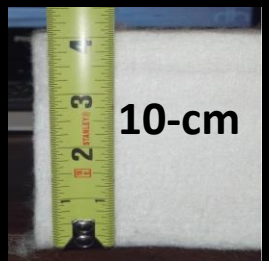

CA-TPS Scale-Up – Step 2

C-PICA Pathfinder Unit Leading to a MDU

- Pathfinder Demonstration Unit for delivery this year
  - NASA designed new metallic molds for large-scale parts
  - Partner to nfiltrate thin and thick felt to demonstrate uniform infiltration and evaluate extent of warping (parts ~0.6m x 0.7m)
  - Install on foam “body”

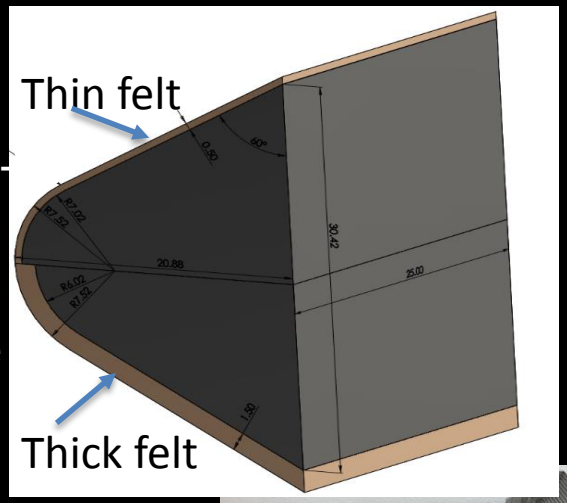

- Manufacturing Demonstration Unit for delivery mid FY16 (if funded)
  - ~1-m length mid L/D vehicle design
  - Build 3-4 panels
  - Side panel(s) demonstrates complex curvature
  - Install on foam “body”

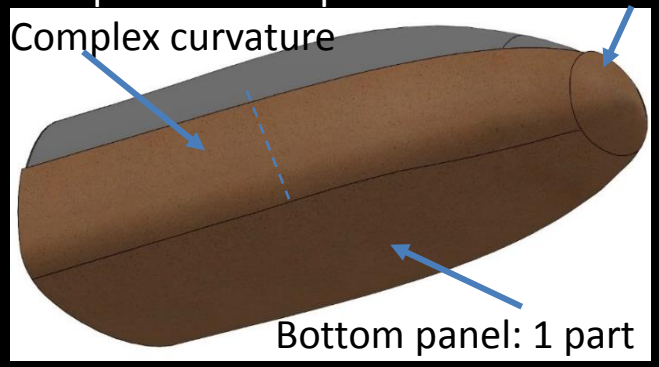

Summary

- **NASA nearing the end of the path to mature a conformal ablative material**
- **Small geometries:**
  - Should be at TRL 5+ at the end of the FY
  - TRL 9 after test flight (end CY17)
- **Larger scale geometries:**
  - Should be at TRL 5 for large geometries by mid-FY16