MARS-X

Human Exploration of Mars from Martian Orbit

Berkeley, Matthew
Blaber, Phillippa
Ferreté Aymerich, Eduard
Golemis, Adrianos
Gomez Gonzalez, Vanesa
Grasso, Alessandro
Houdu, Guillaume
Hamm, Seung Beom "Bill"
Kabbaligere, Rakshatha
Kostylev, Andrey
Li, Meng
Murzionak, Piotr
Narang, Vikrant
Nohel, Aleš
Pallikonda, Sireesh
Pica, Udrivolf
Sacco, Enea
Shaw, Skyler
Singh Derewa, Chrishma
Stuglik, Szymon
Taylor, Graeme
Verrecchia, Angélique
Vihmand, Mart
Wang, Wei
Wilson, Thomas
Wu, Yanhong
Yee, Lindsey

1. OUR MISSION

To propose a scenario to explore Mars by landing humans on a Martian moon and returning them safely to Earth, in order to prepare the foundation for the first human mission to the surface of the Red Planet.

2. WHY?

"*We choose to go to the Moon … not because it is easy but because it is hard.*" - JFK

With these words, John F. Kennedy inspired an entire nation to reach the Moon. Today Mars-X aims to re-ignite that same passion throughout humanity in an effort to reach Mars. Beyond all the technological advancements, acquired scientific knowledge, and the political and legal frameworks developed, the strongest impact of a manned mission to Mars will be to awaken humanity's innate curiosity about worlds beyond our own.

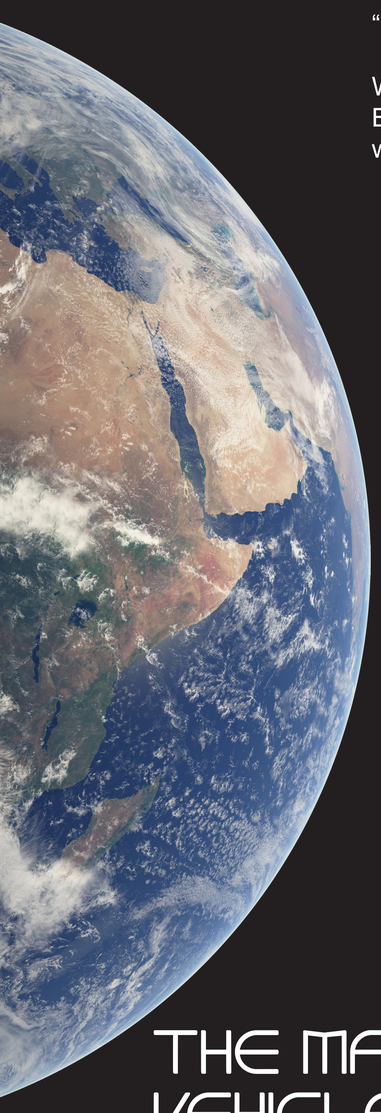

3. THE GLOBAL EXPLORATION ROADMAP

Mars-X offers an alternative third path in the GER (shown right): instead of using Earth's Moon and a Near-Earth Asteroid as stepping stones before landing on Mars, this project proposes a mission to Phobos, a Martian satellite that is suspected to be an asteroid.

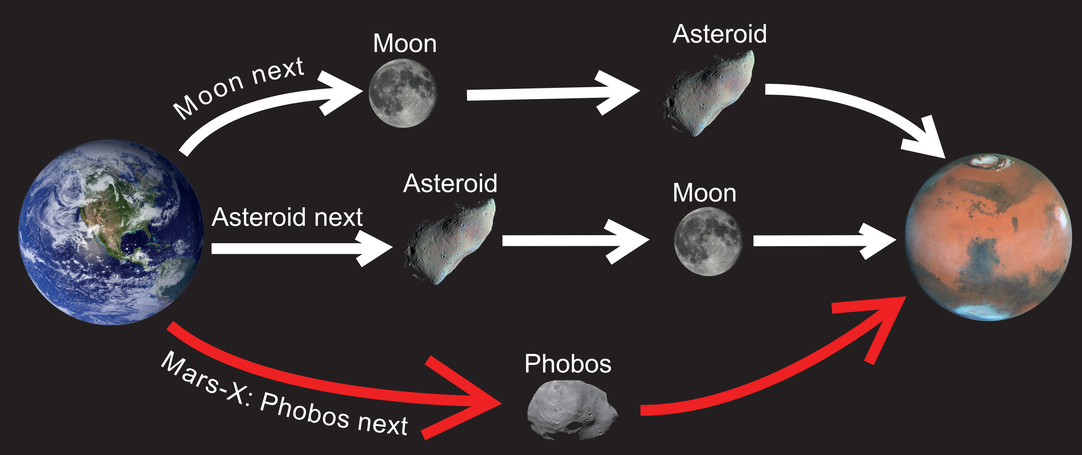

PHASE 1 (2020 to 2022): Launch of satellites to ensure continuous communication with rovers on the Martian surface

PHASE 2 (2023): MXV construction in LEO

THE MARS EXPLORATION VEHICLE - MXV

Crew: 5 astronauts
Total dry mass: 215 tonnes
Mass leaving LEO: 500 tonnes
Length: 55 meters
Power required: 40 kW
Artificial Gravity : partial (achieved by spinning the entire spacecraft)
Mission duration: ~919 days
Radiaton shielding: Polyethylene - 10 g/cm^2 and a special shielded chamber during solar events

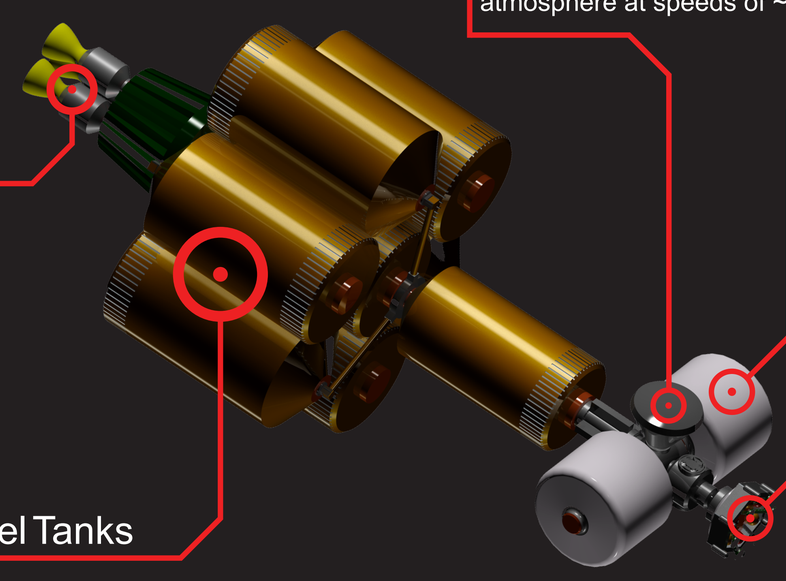

Nuclear Thermal Rocket Engines

Double the performance (I_{sp} of 975s) compared to chemical engines (I_{sp} of 400-450s), which significantly lowers the total mass of fuel required to reach Phobos. Propulsion is provided by liquid hydrogen.

Liquid Hydrogen Fuel Tanks

Return Capsule

The return capsule will have high thermal shielding to reenter Earth atmosphere at speeds of ~12 km/s.

Inflatable Habitat

This is where the crew will live and work during their journey. The life support system will recycle 90% of the water and 20% of the food.

Phobos Lander

This module will be used to dock with Phobos and establish the Martian Moon Outpost. Due to the low gravity on Phobos, a berthing mechanism will be used.

4. THE MARS-X CONSORTIUM

Mars-X has defined the governing authority for the viable execution of the proposed gateway on the Martian moon of Phobos. Several models were researched; however, an intergovernmental organization together with a transnational corporation provides the most practical legal and business case for Mars-X. This innovative public-private partnership model involves the creation of a new intergovernmental authority, the Mars-X Consortium (MxC). This commercial entity combines state reliability and legality with the flexibility of industry on an international level.

In addition to the acquisition and distribution of scientific data, MxC will be responsible for resource speculation and allocations, ingress and egress routes, and mission resupply making a "Port Authority" model an ideal analogue.

The MxC partnership model seeks to bring all nations to the endeavor which will increase funding levels. Extensive partnerships with the private sector composed of numerous transnational corporations, enables MxC to engage resources previously untapped. A request for proposals or call for tenders by MxC will invite private industry buy-in as equal voting members in the consortium. Once added, these members will be made identical financial contributions as the member states themselves.

PHASE 3 (2024): Mission to Martian moon

PHOBOS

Whilst docked to Phobos, a sample return experiment of the Phobos regolith will be conducted.

It is theorized that Phobos may have subsurface H_2O; analysis of the regolith could lead to exciting advances for planetary sciences and in situ resource utilization (ISRU).

Due to accretion, the surface of Phobos also contains Martian soil which could be returned to Earth for further analysis for the first time in human history.

MARS

There are plenty of motivations for further study of the Red Planet.

Telerobotics play an important part in the mission. Flying and ground rovers piloted in real time by the orbiting astronauts will measure the radiation environment, atmospheric conditions and methane vents for the benefit of future human missions to Mars.

Other ground based rovers will explore the Valles Marineris to research the geological history of Mars, and determine whether or not there was once tectonic plate activity on Mars.

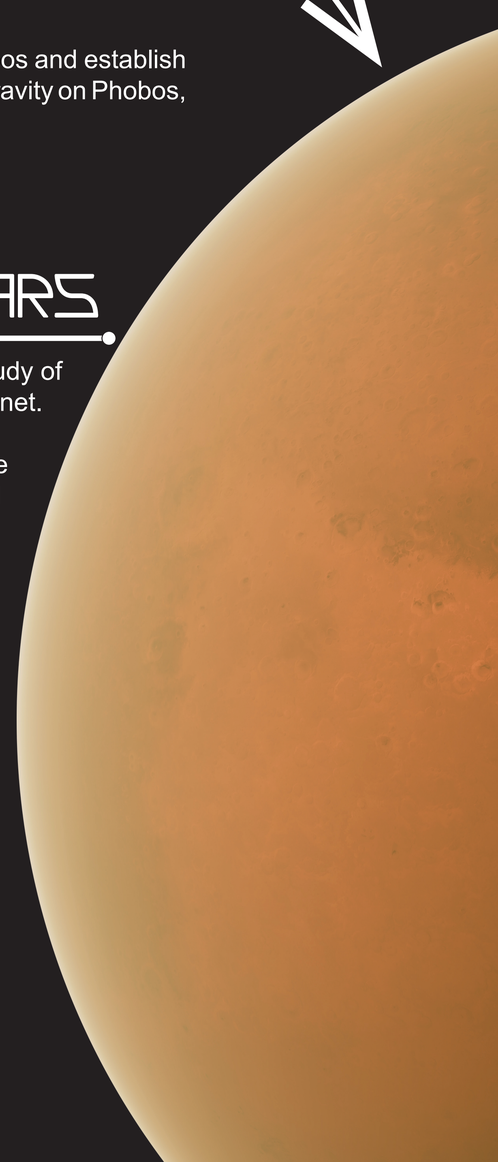

INTERNATIONAL SPACE UNIVERSITY

Sponsored by: NASA LOCKHEED MARTIN