COMBINED SENSOR PACKAGE COMARS+ FOR MEASURING AEROTHERMAL AND RADIATION LOADS ON THE EXOMARS EDM CAPSULE BACK COVER

Ali Guelhan, Frank Siebe, Thomas Thiele, Uwe Koch

Supersonic and Hypersonic Technology Department
German Aerospace Center (DLR)
Linder Hoehe, 51147 Cologne

IPPW-11
16.-20. June 2014, Pasadena, USA

DLR

Combined Sensor Package COMARS+ for Measuring Aerothermal and Radiation Loads on the Exomars EDM Back Cover

Content

- Introduction
- Layout of COMARS+ sensor package
- Detailed description of COMARS+
- Mechanical design
- Thermal analysis
- Qualification tests
- Radiation hardness verification
- Achievements and next steps

DLR

EXOMARS EDM Back Cover Heating

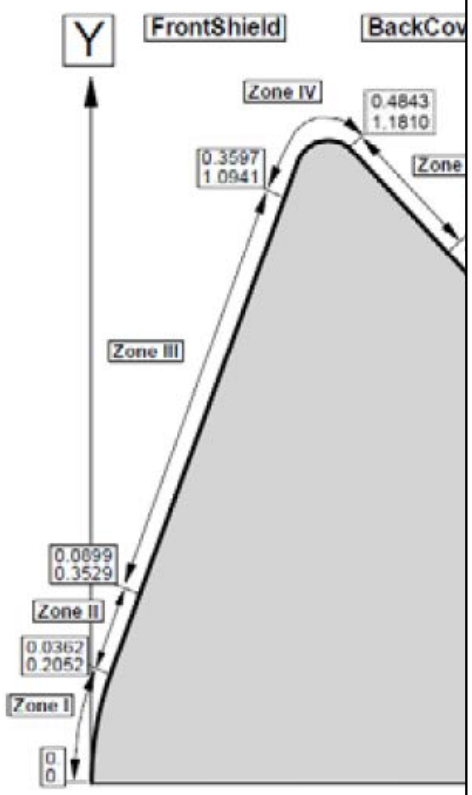

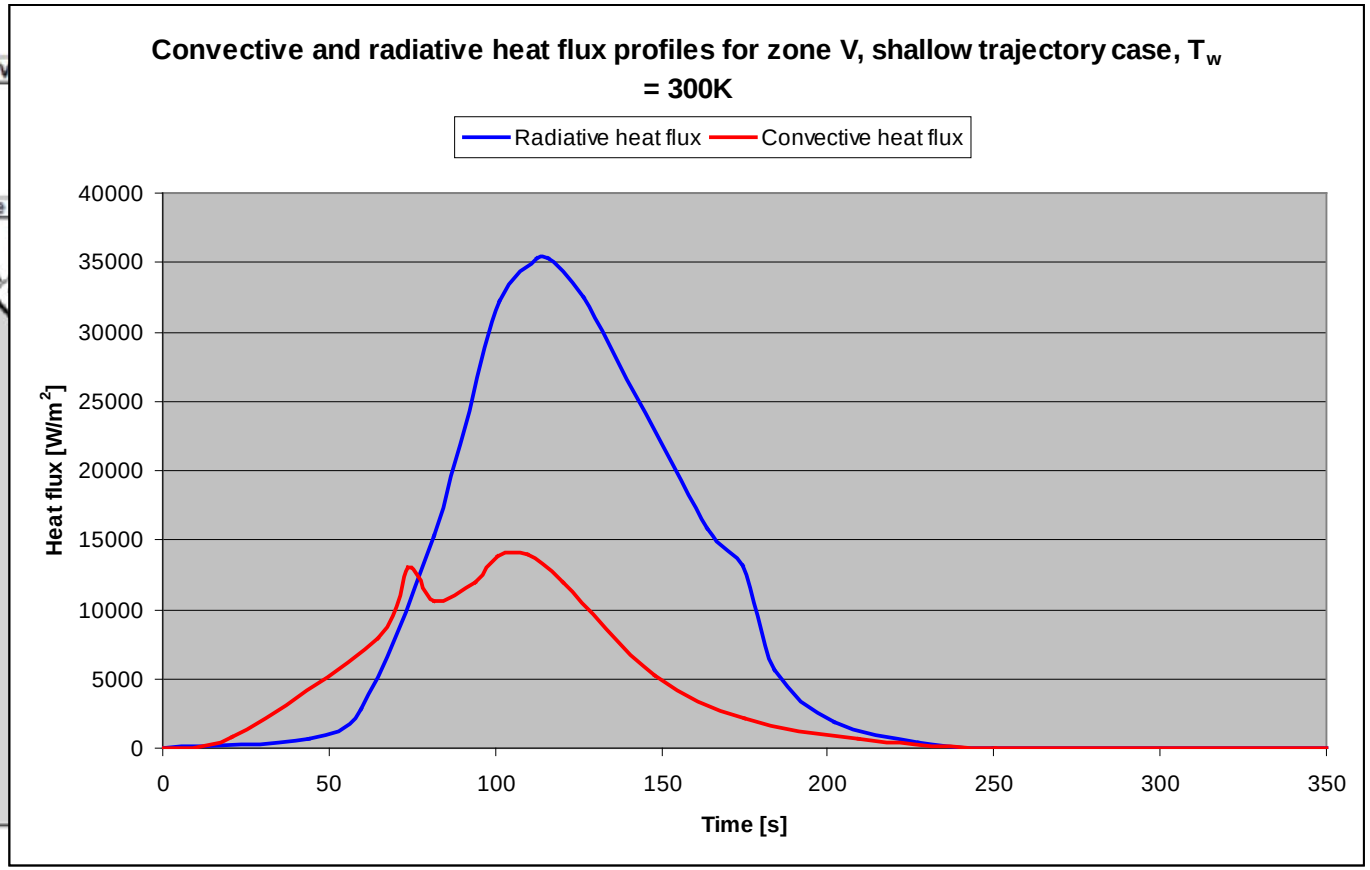

Ref.: EXM-DM-TNO-AI-0059: ExoMars EDM Aerothermodynamic Database

Courtasy of FGE

DLR

COMARS+ Payload on EDM Back Cover

Back cover interior view
Position of COMARS sensors (COM1-COM3), radiometer (RAD) and electronic box (MSC)

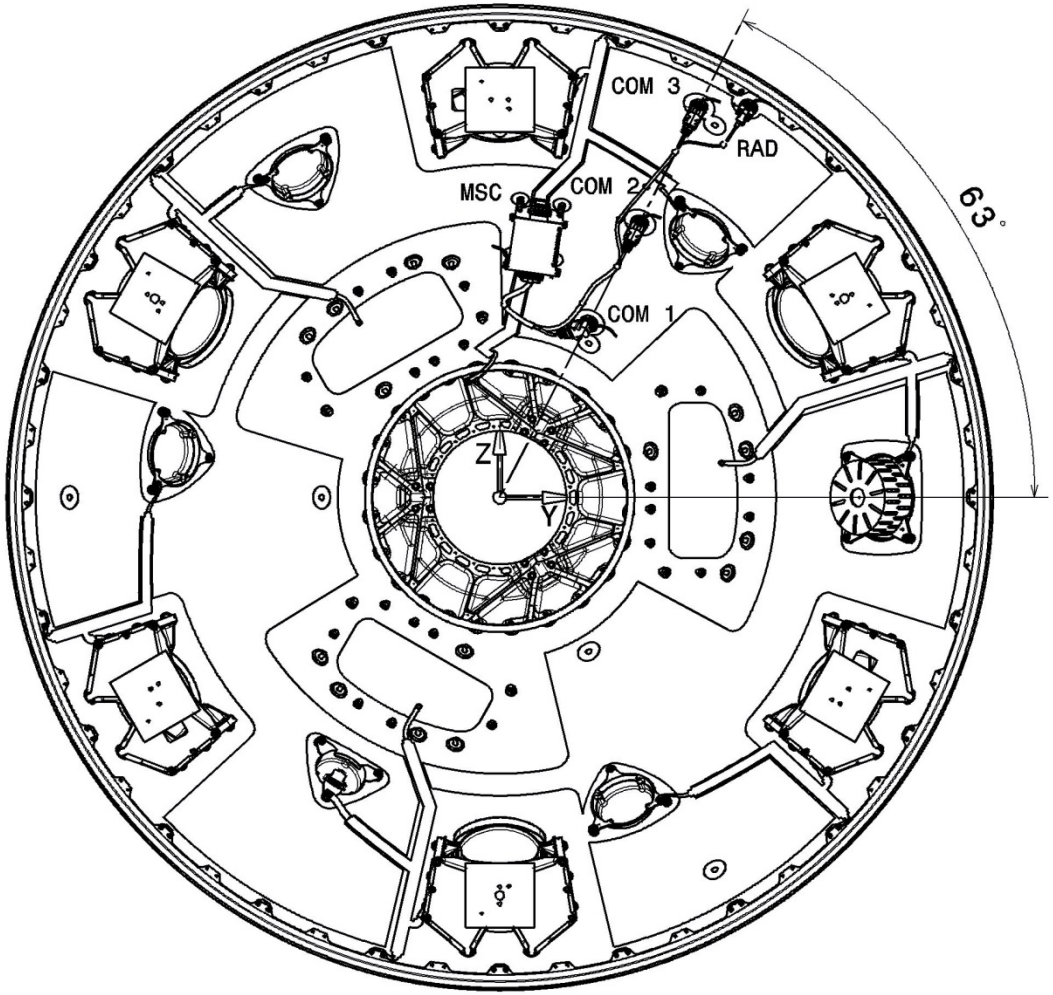

DLR

Overview Sensors

COMARS 1	Pressure sensor	Pressure signal	1
		Reference temperature	2
	Heat flux sensor	Heat flux signal	3
		Reference temperature	4
	Optical fiber (CNES)	Sensor 1	5
		Sensor 2	6
COMARS 2	Pressure sensor	Pressure signal	7
		Reference temperature	8
	Heat flux sensor	Heat flux signal	9
		Reference temperature	10
	Optical fiber (CNES)	Sensor 1	11
		Sensor 2	12
COMARS 3	Pressure sensor	Pressure signal	13
		Reference temperature	14
	Heat flux sensor	Heat flux signal	15
		Reference temperature	16
	Optical fiber (CNES)	Sensor 1	17
		Sensor 2	18
Radiometer		Signal	19
		Reference temperature	20

!!! Reference temperature means the temperature of the sensing element of each sensor and not it‘s case !!!

DLR

COMARS Sensor Mechanical Layout

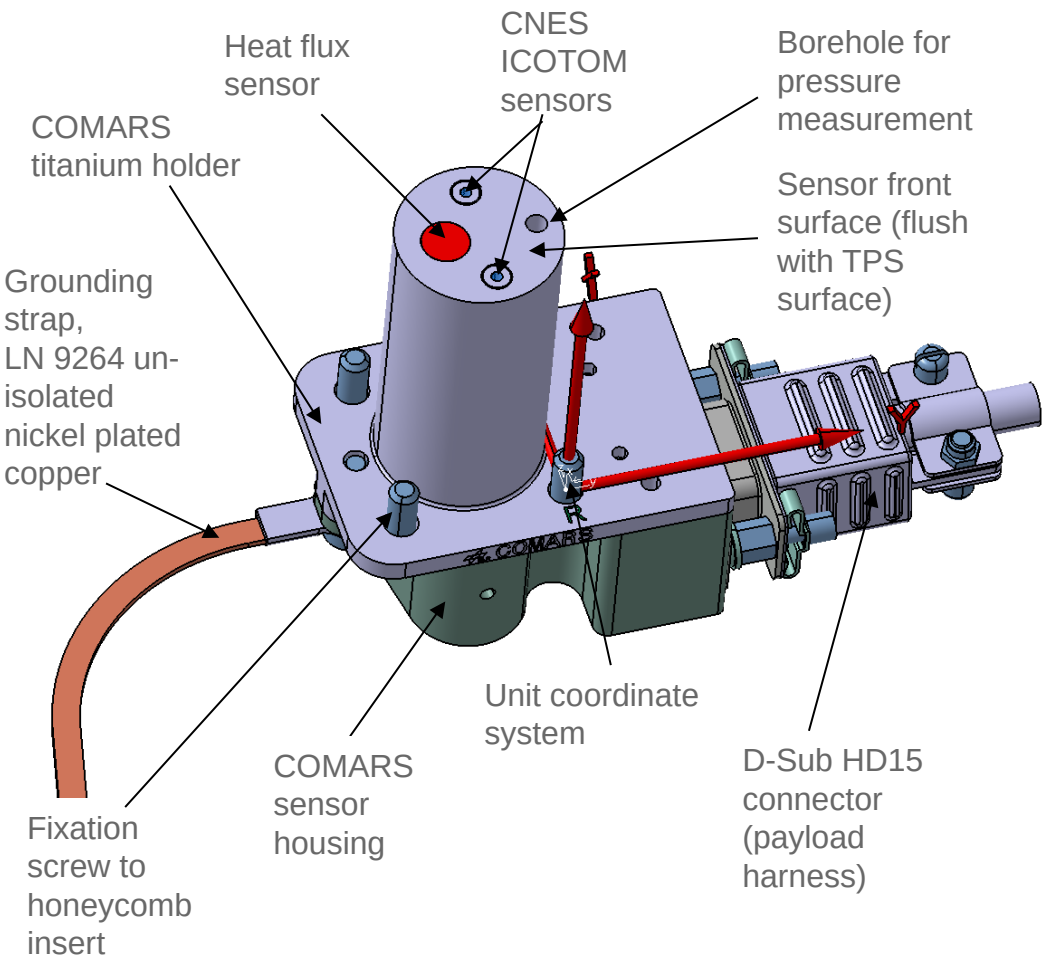

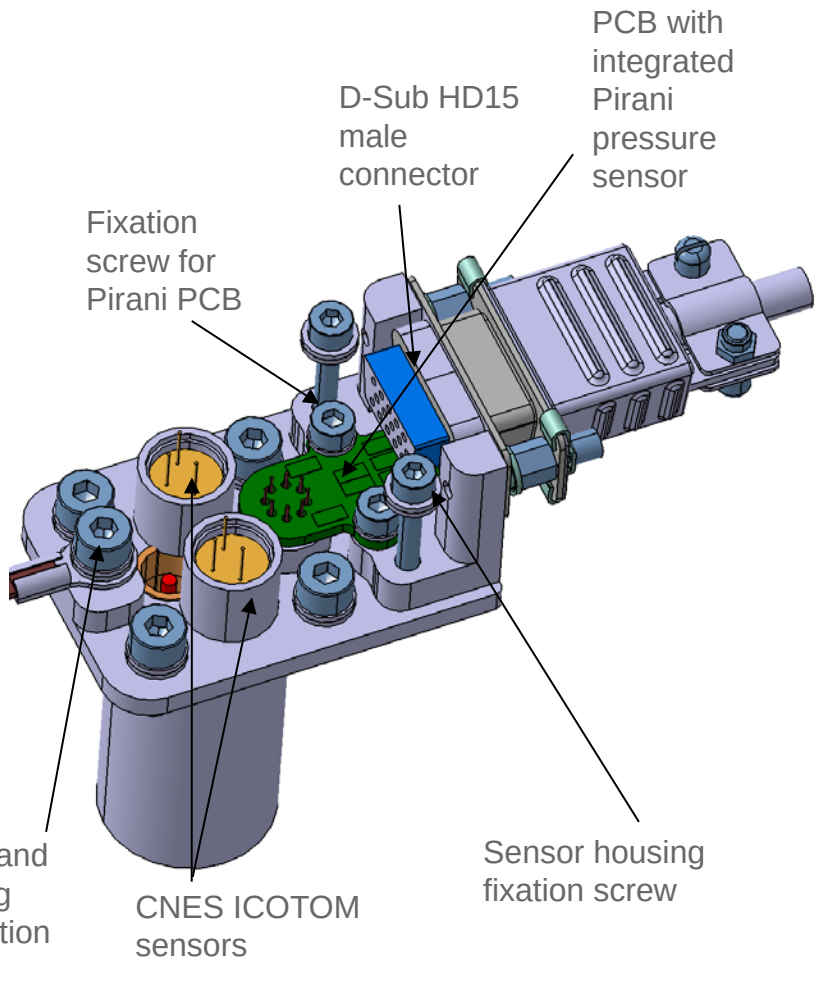

DLR

DLR Radiometer Sensor Mechanical Layout

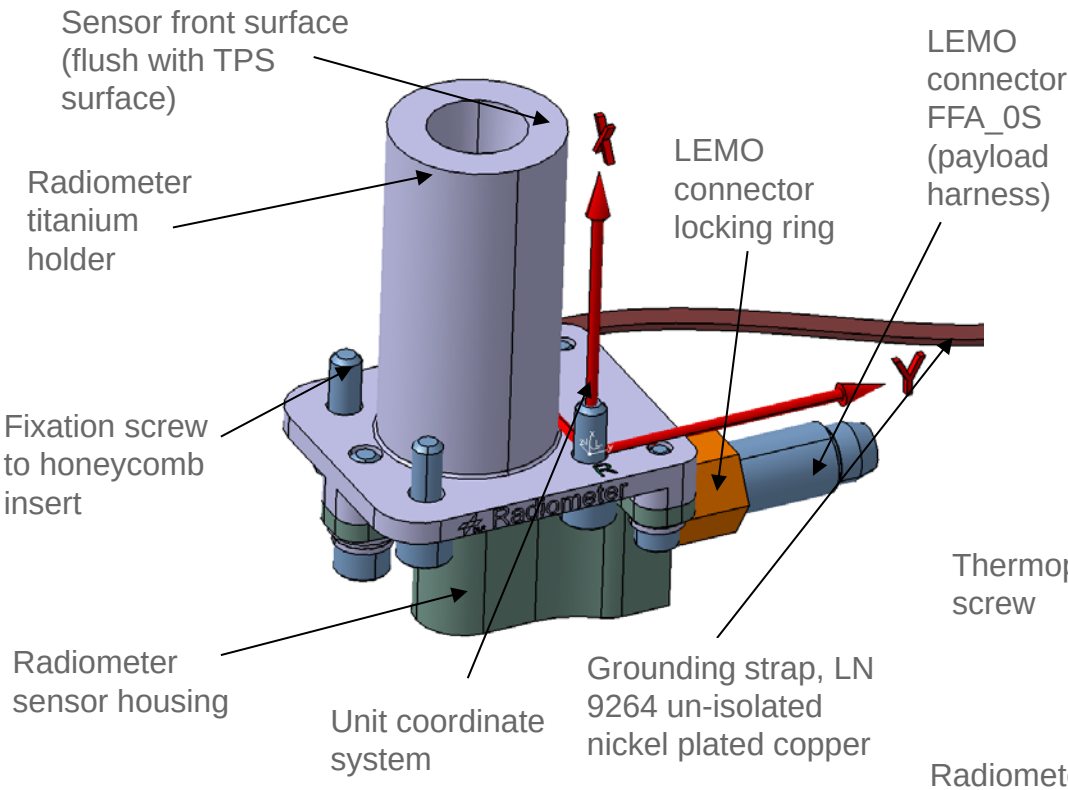

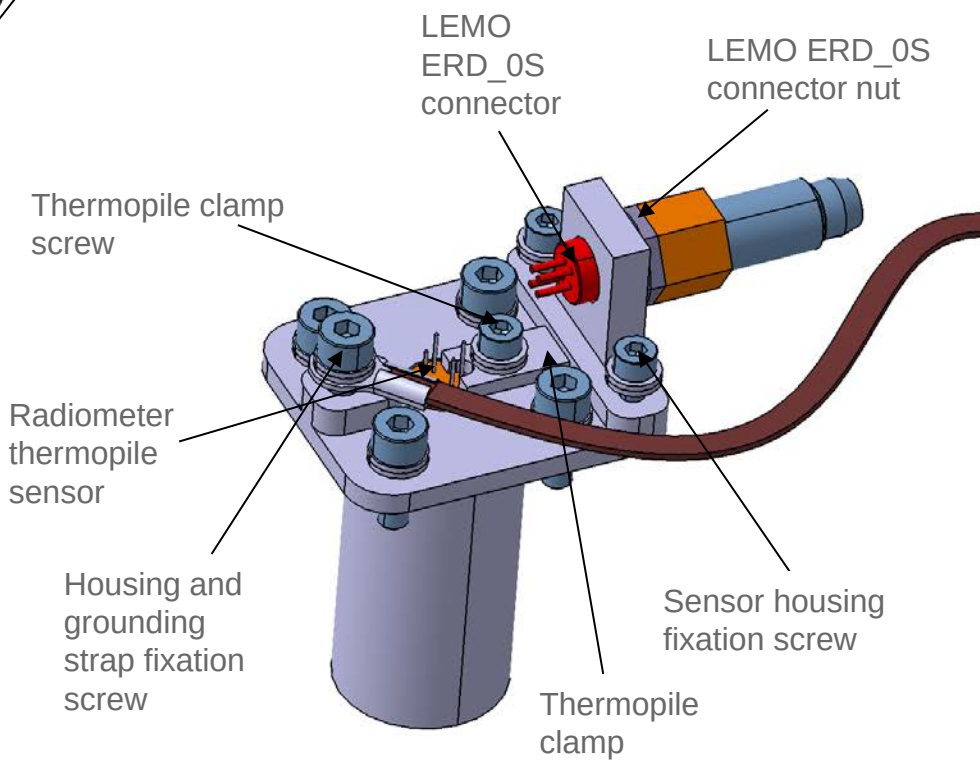

DLR

MSC (Electronic Box) Mechanical Layout

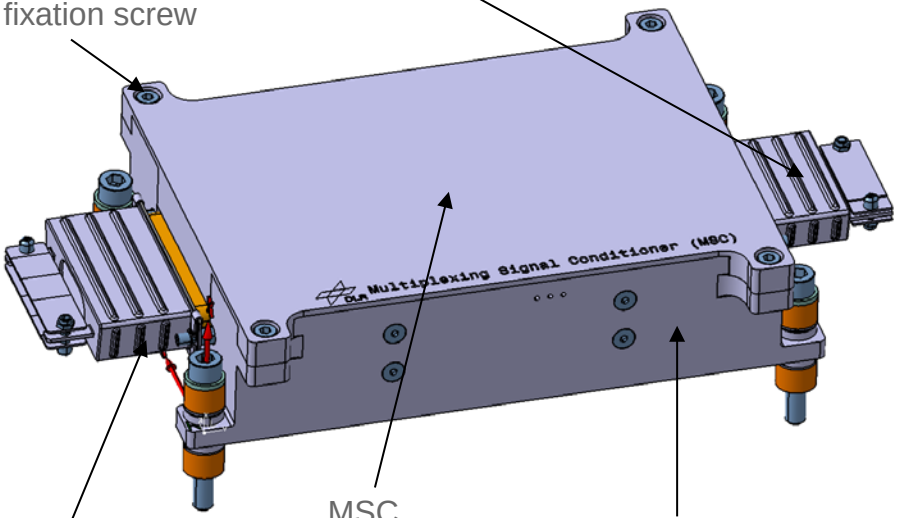

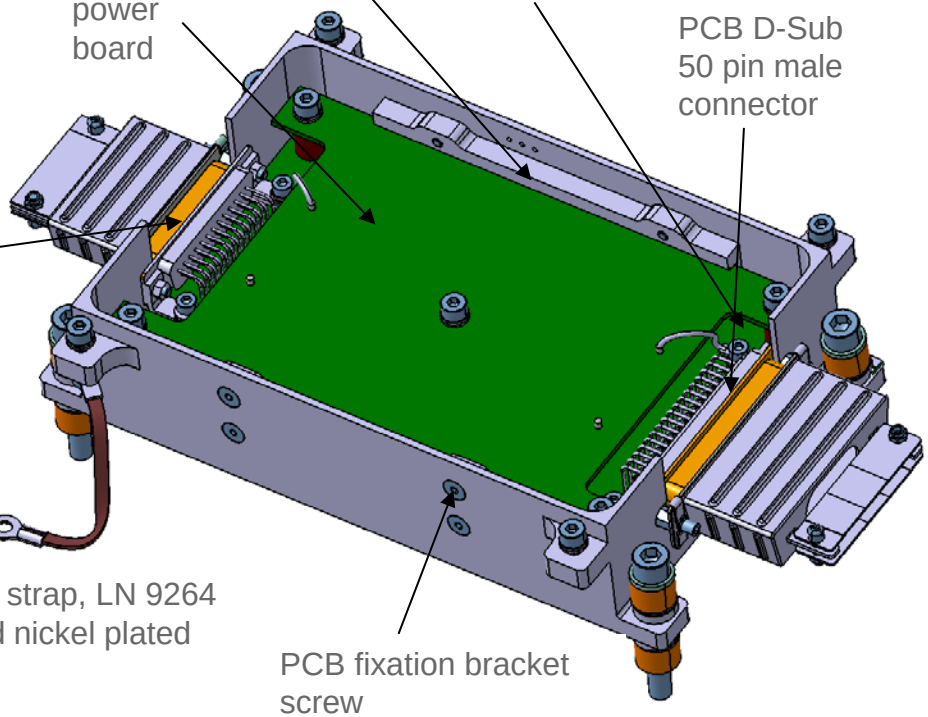

DLR

MSC PSD Analysis, Deflection of Multiplexing Board (left) and Power Board (right)

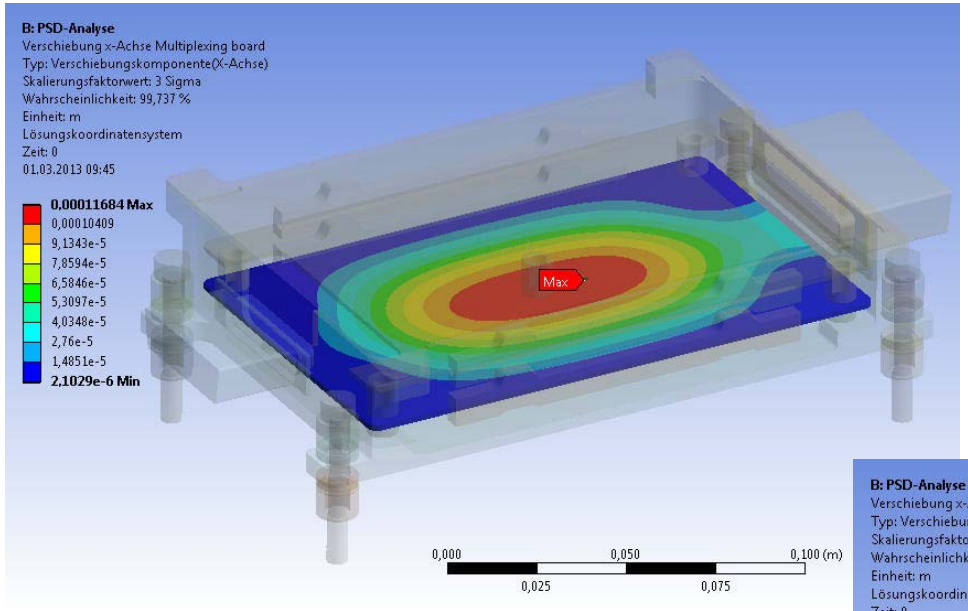

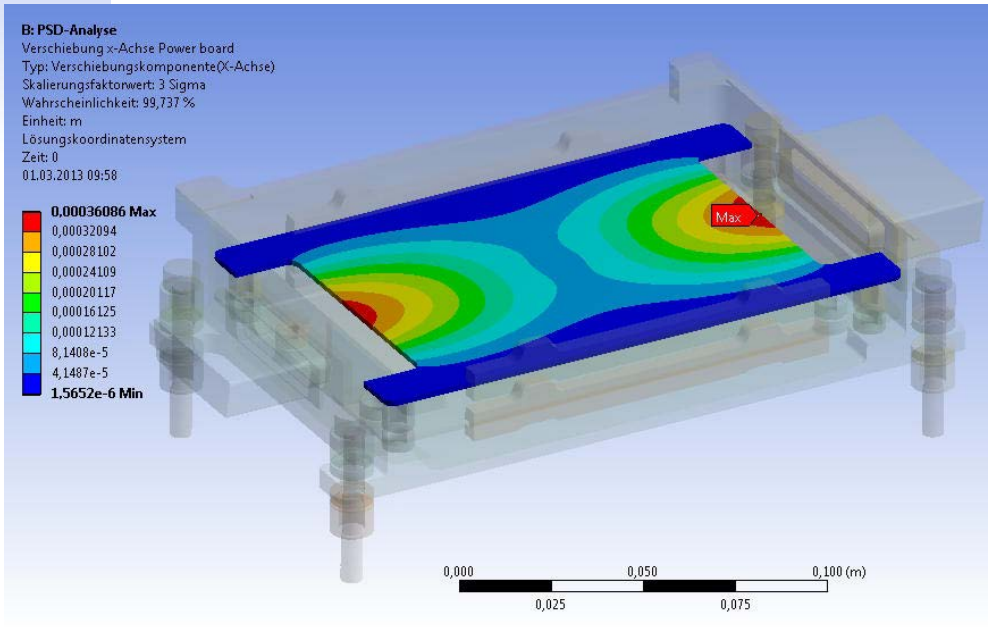

DLR

FEM Mesh for COMARS Sensor Thermal Simulation and Simulation Results

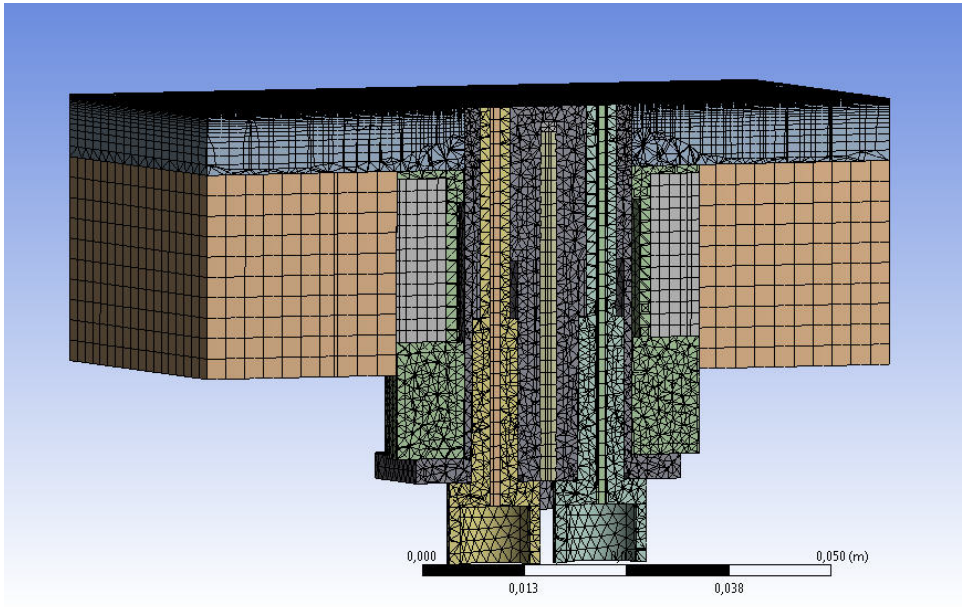

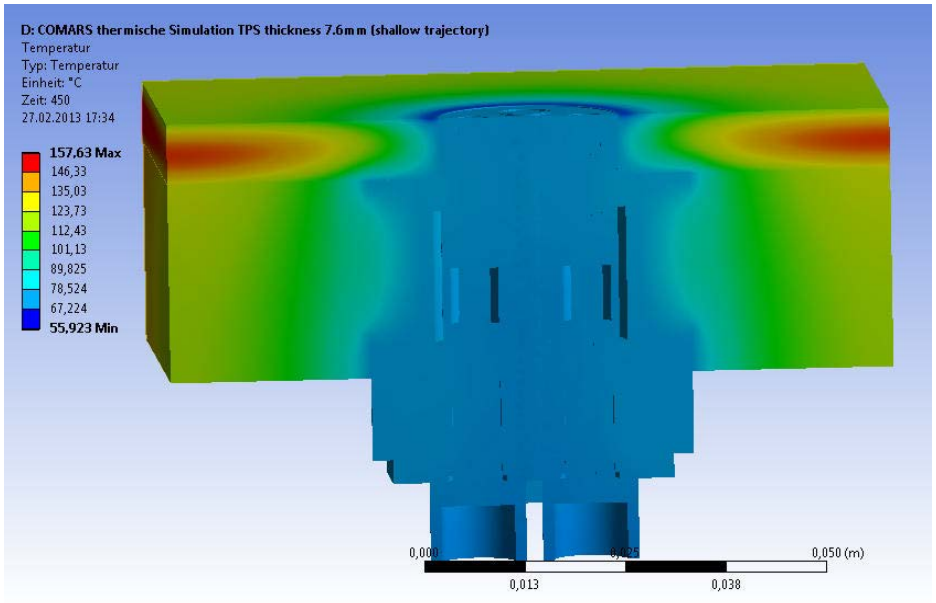

Part / Surface	Shallow trajectory maximum temperature [°C]	Maximum operative temperature [°C]
PIRANI sensor surface (PIRANI sensor)	72	90
HFM substrate	98	200
HFM epoxy	96	200
COMARS titanium holder	126	400

DLR

Radiometer Simulation Shallow Trajectory
Temperature Distribution at Simulation End (t=450s)

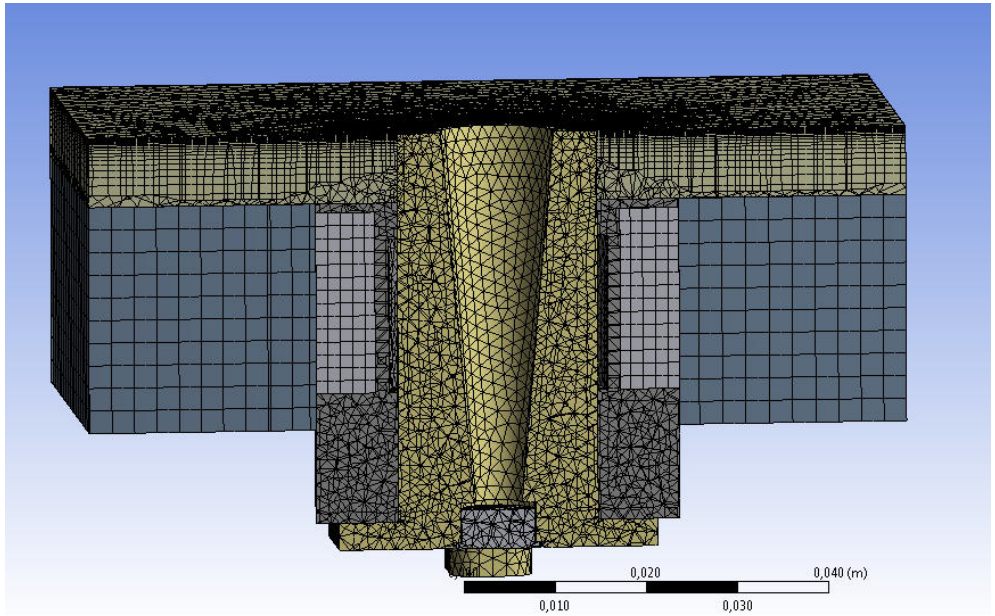

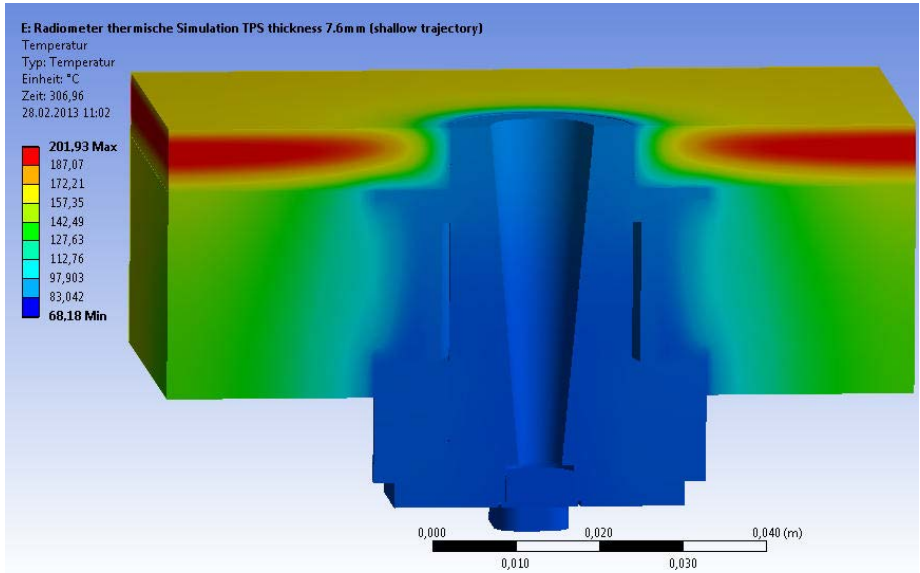

Part / Surface	Shallow trajectory maximum temperature [° C]	Maximum operative temperature [° C]
Thermopile sensor	93	100
Radiometer titanium holder	155	400

DLR

Temperatures Comparison with and without COMARS Sensor

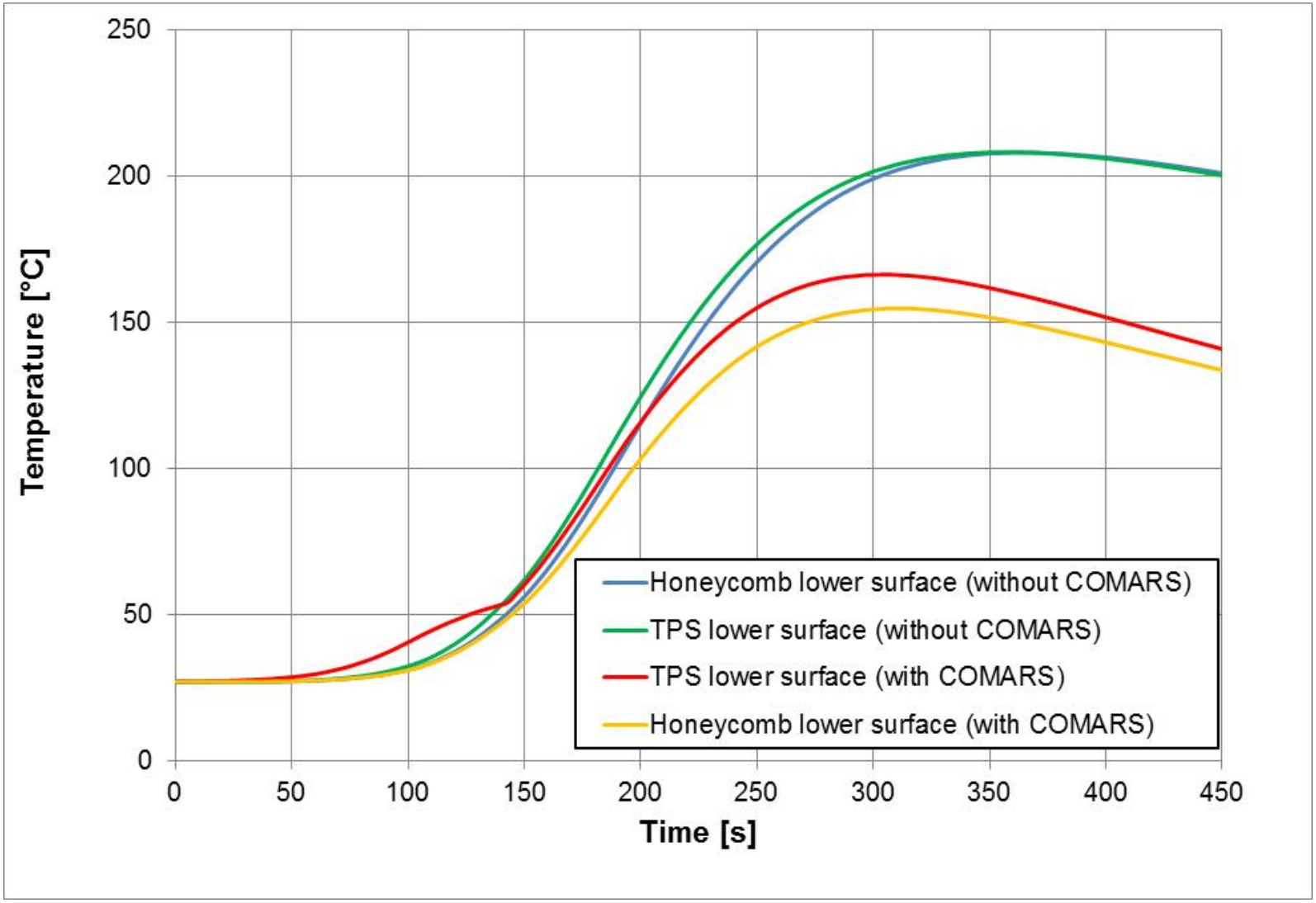

DLR

Aerothermal Tests in the Arc Heated Facility L2K

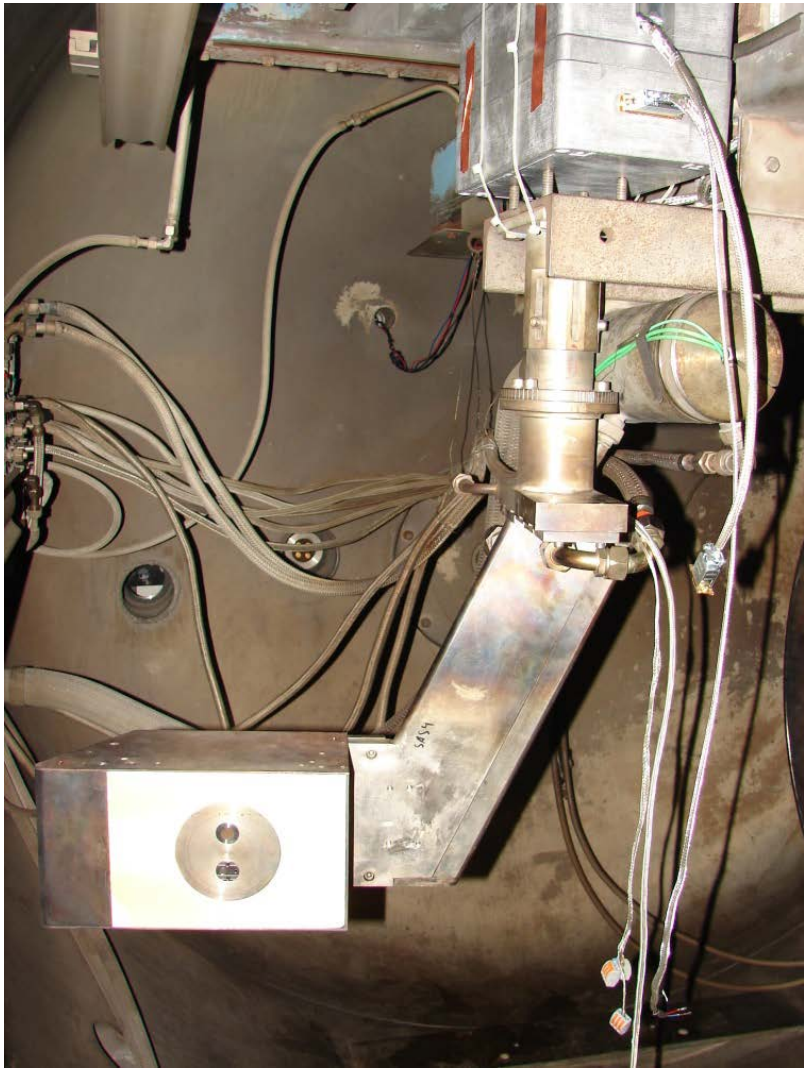

Test condition	low enthalpy		high enthalpy	
Configuration	Stagn.	Wedge	Stagn.	Wedge
gas mass flow rate $\dot{m}$ [g/s]	41.2		41.2	
reservoir pressure p_0 [hPa]	790		930	
specific enthalpy h_0 [MJ/kg]	5.6		9.2	
total temperature T_0 [K]	2815		3283	
nozzle throat/exit diameter D_t / D_e [mm]	29/100	29/200	29/100	29/200
distance from nozzle exit x_e [mm]	160	250	160	250
distance from nozzle throat x_t [mm]	329	654	329	654
free stream static pressure p_1 [hPa]	2.1	0.5	2.1	0.4
free stream static temperature T_1 [K]	1001	744	898	604
free stream density ρ_1 [kg/m^3]	$9.4 \cdot 10^{-4}$	$2.7 \cdot 10^{-4}$	$8.6 \cdot 10^{-4}$	$2.5 \cdot 10^{-4}$
free stream velocity v_1 [m/s]	2172	2306	2481	2611
mole fraction of CO_2 n_{CO_2} [–]	0.546	0.546	0.227	0.227
mole fraction of CO n_{CO} [–]	0.277	0.277	0.459	0.459
mass fraction of O_2 n_{O_2} [–]	0.122	0.122	0.162	0.162
mass fraction of O n_O [–]	0.027	0.027	0.126	0.126
mass fraction of N_2 n_{N_2} [–]	0.022	0.022	0.016	0.016
mass fraction of NO n_{NO} [–]	0.005	0.005	0.009	0.009

DLR

Measured total heat flux rate during aerothermal tests in L2K

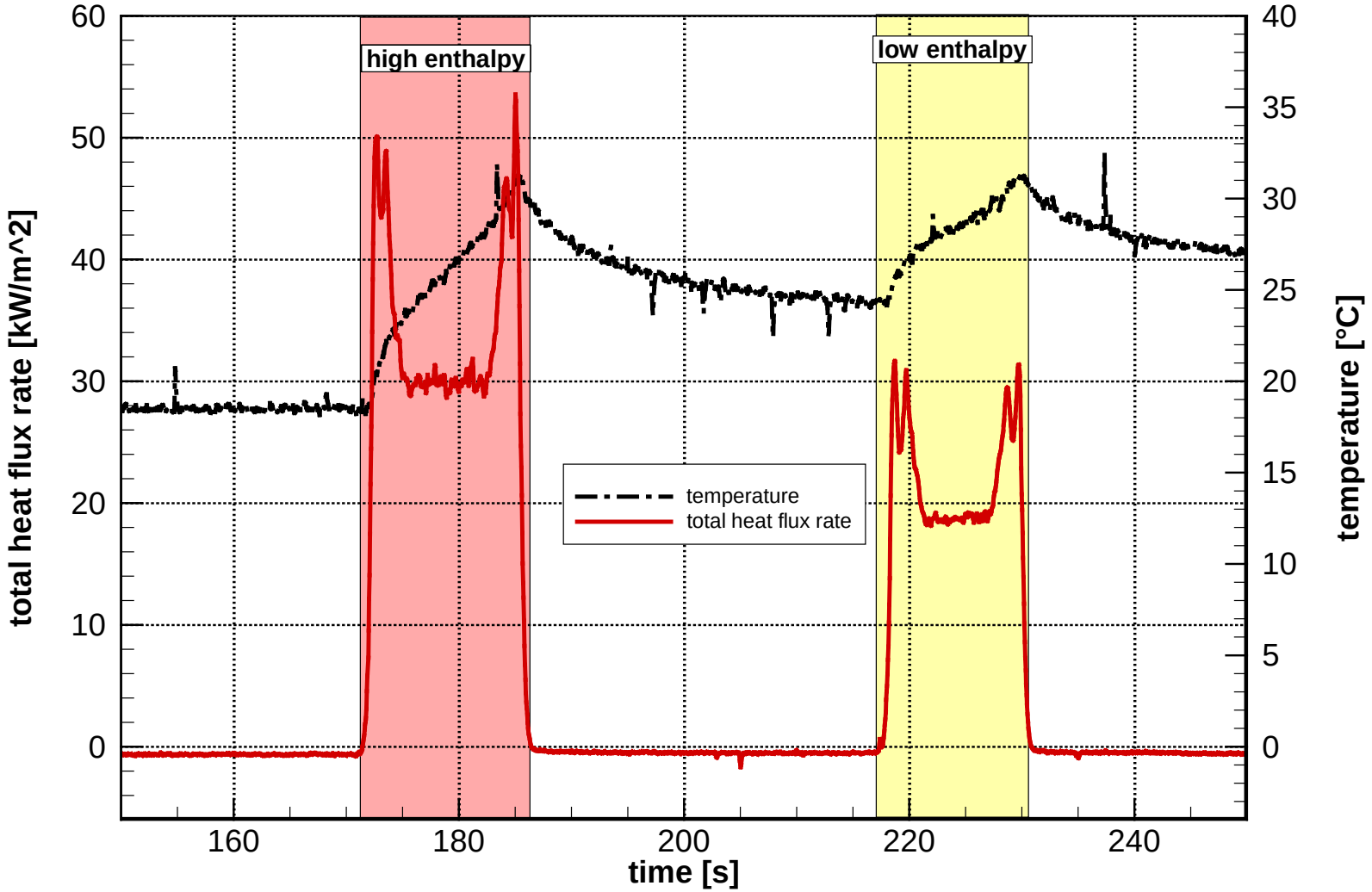

DLR

Measured radiative heat flux rate during aerothermal/radiation tests in L2K

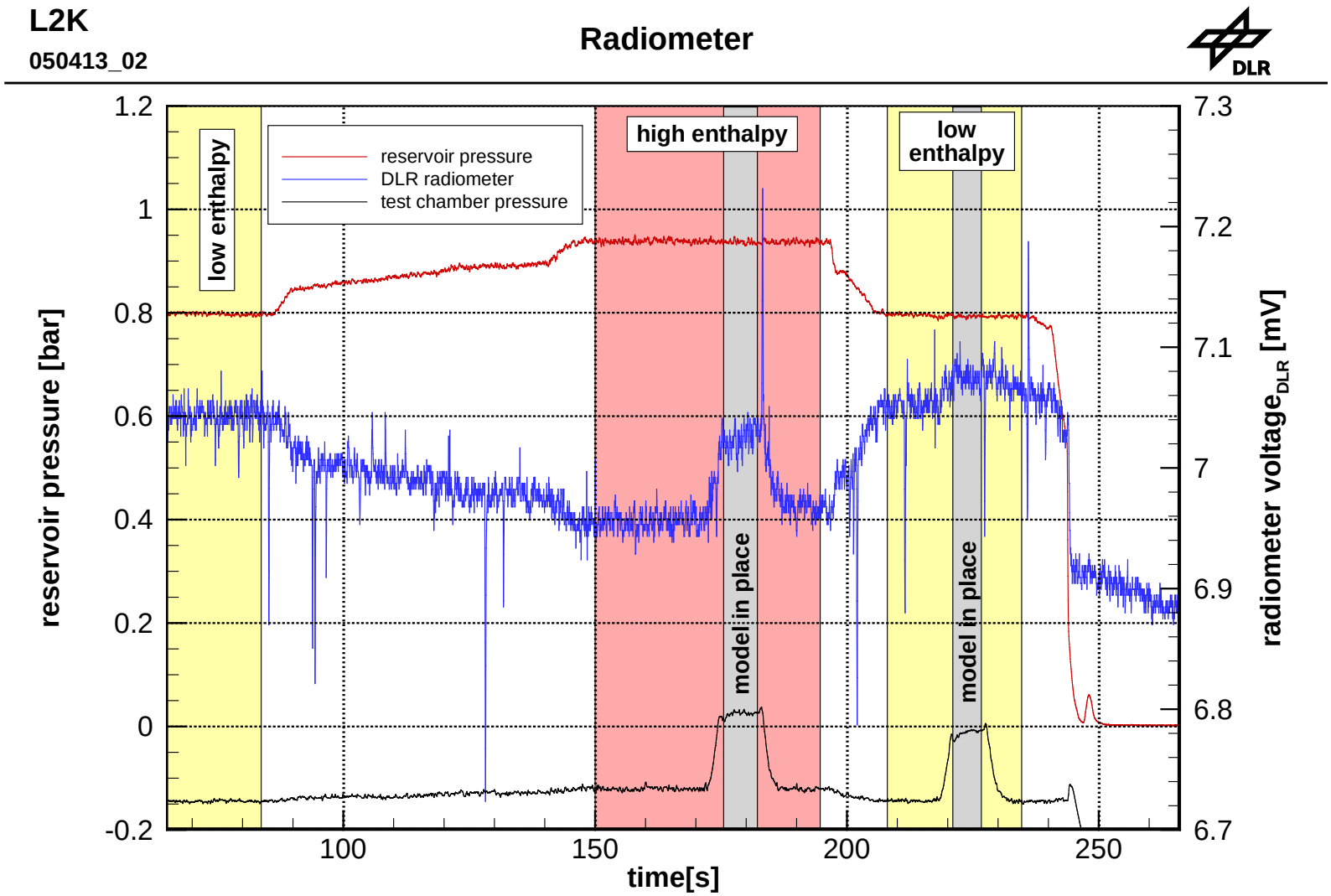

Measured free stream spectra in L2K compared to simulated CO2 spectra at 900 K

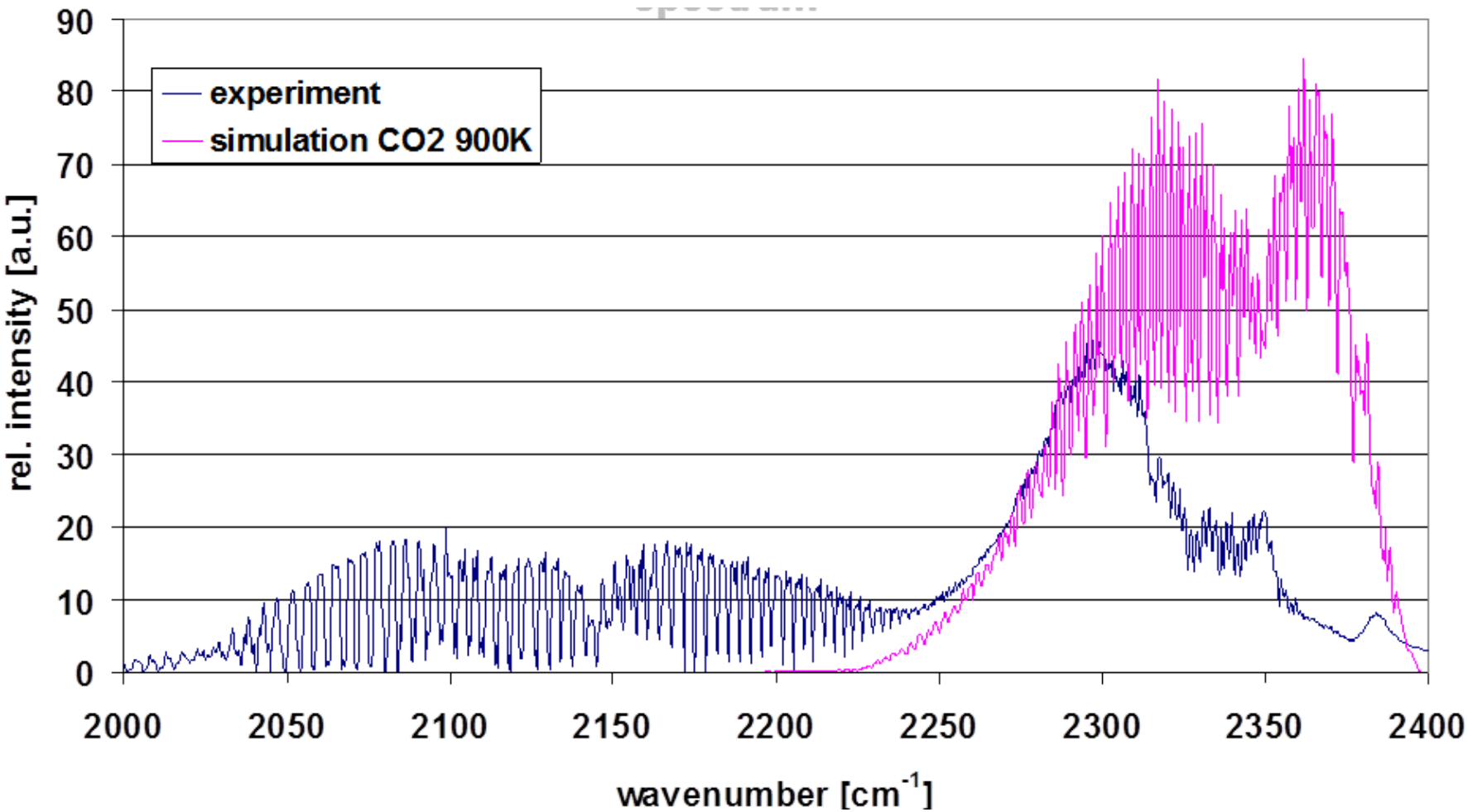

DLR

Check of heat flux sensor calibration before and after radiation hardness test at 10 krad

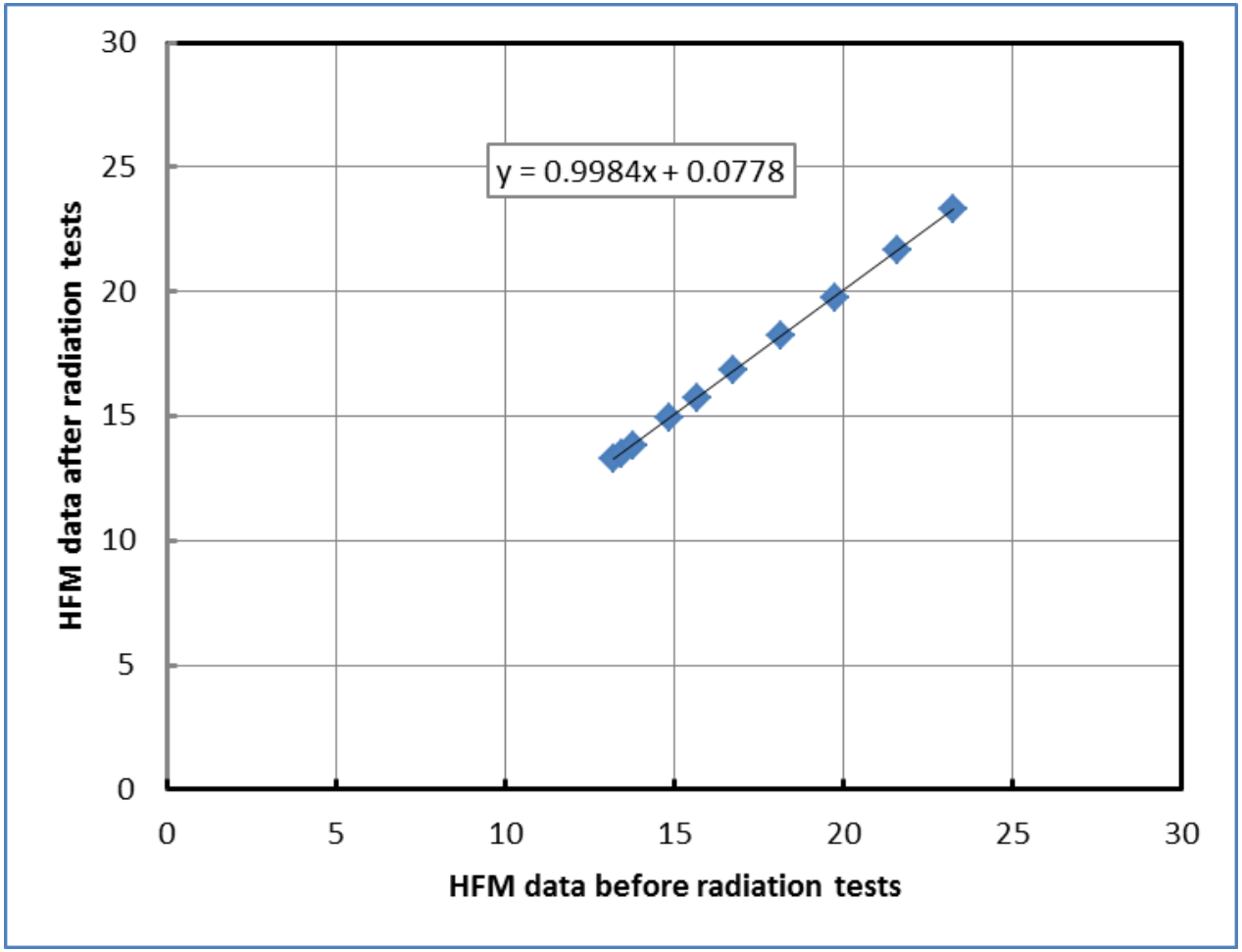

using a Cobalt-60 source at 3.95 krad/hour for 2.54 hours

DLR

Achievements

- COMARS+ sensor package consisting of the DLR combined sensor package COMARS and the narrow band radiometer ICOTOM of CNES has been designed and verified for the EXOMARS EDM mission in 2016.
- All tests on QM have been carried out successfully.
- Planetory protection has been demonstrated successfully.
- Aerothermal tests showed that the COMARS+ package is able to detect even low radiative heat fluxes in the order of a few kW/m2.
- The total mass is 1.84 kg (with margins).
- The power consumption is approx. 5 W with an operational time of 20 minutes.

DLR

Next steps of COMARS+ activities

- Complete FM hardware will be available until end of June 2014.
- Tests Readiness Review for FM qualification (July 15, 2014)
- Mechanical tests (July 21-25, 2014)
- EMC tests (August 4-12, 2014)
- Thermal vacuum tests (August 14-29, 2014)
- Final calibration (September 1-14, 2014)
- Planetary protection treatment (September 15-19, 2014)
- FM Documentation (September 22 – October 3, 2014)
- Delivery of COMARS+ to ESA/TAS-I (October 3, 2014)
- Final Review of COMARS+ (October 20, 2014)