ADEPT for Secondary Payloads

Brandon Smith, Alan Cassell, Ethiraj Venkatapathy
NASA Ames Research Center
brandon.p.smith@nasa.gov

Eleventh International Planetary Probe Workshop
Pasadena, CA
USA
16-20 June 2014

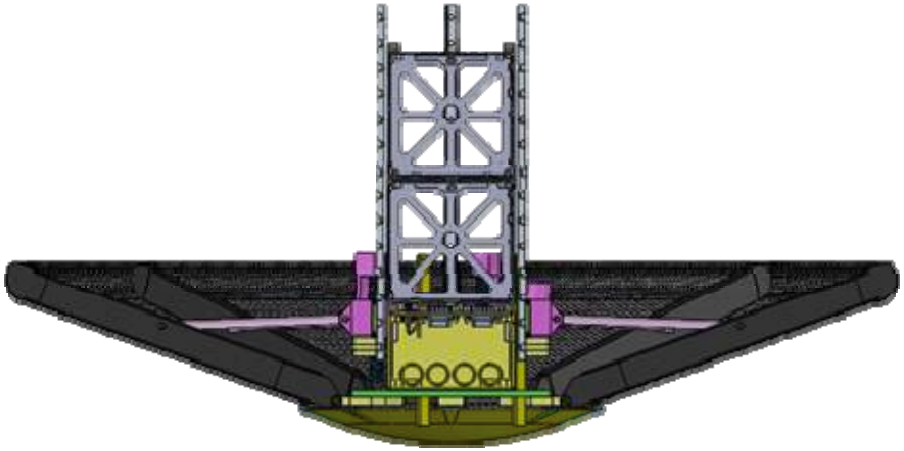

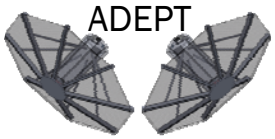

Large ADEPT is Revolutionary Technology

- Large ADEPT (~ 5-12 m diameter) out performs a rigid sphere-cone aeroshell on traditional performance dimensions:
  - Deceleration load benefit for Venus In Situ Explorer (VISE) → 30 g vs. 300 g peak deceleration *(6 m/70°)* [1]
  - Landed altitude benefit for Curiosity-class robotic Mars missions → enables subsonic parachute deployment at high altitudes *(9-12 m/45°)* [2]
  - Landed payload mass fraction benefit for human Mars precursor missions *(5-12 m/45-70°)* [2]
- ADEPT is enabling for human Mars missions [3]
  - 15+ m diameter with active control
- Building a bridge over the technology gap remains difficult
  - Research of Clayton Christensen: Incumbent technologies tend to win sustaining battles, but entrants tend to win disruptive ones [4]
  - Mission-infusion of ADEPT may be more likely if we pursue a new EDL payload market: small spacecraft and secondary payloads of large missions (Flagship / NF / Discovery)

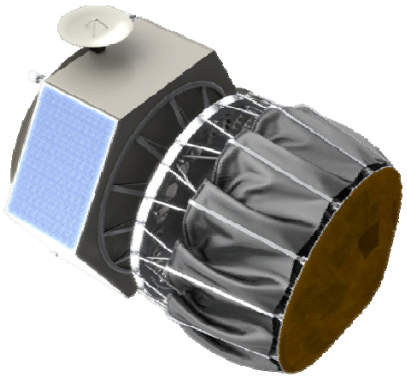

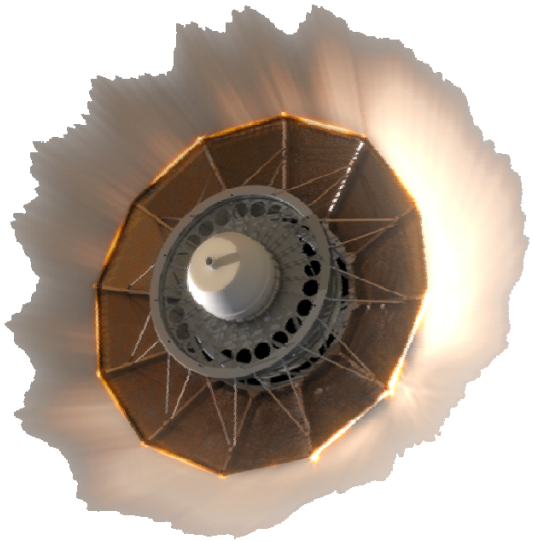

6 m diameter ADEPT-VISE in cruise (top) and entry (bottom) configurations

Small Spacecraft as Secondary Payloads

- The state of the art in small spacecraft has advanced tremendously in the last few years by embracing secondary payload launch opportunities. [5] Purposes include:
  - Education
  - Technology development
  - Science
  - Commerce
  - Defense
- Small spacecraft keep costs low by using standardized launch vehicle interfaces and minimizing impact on the mission of the primary payload
- In the next five years or so some 1,000 nanosats (satellites of 1-10kg) are expected to be launched [6]
- **What would a "nano" ADEPT look like that embraces the tenets of the small spacecraft movement? What are the capabilities?**
  - Desired attributes:
    - Simple mechanical and electrical interfaces with primary payload (use existing standards if possible)
    - Reliable and robust deployment mechanisms
    - Use of COTS parts wherever possible
  - A Nano-ADEPT with these attributes might be considered "disruptive" rather than "revolutionary"

3U nanosats

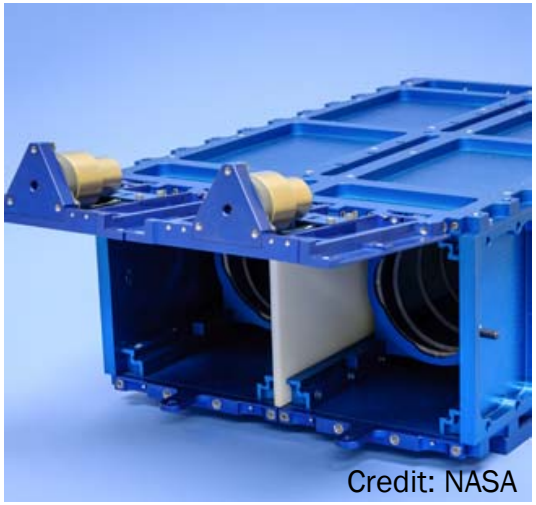

Nanosatellite Launch Adaptor System (NLAS) can accommodate 1U-6U nanosats

Nano-ADEPT and the Tenets of a Disruptive Technology

Disruptive innovations are about tradeoffs!

- Lesser performance along one dimension in exchange for new benefits related to simplicity, accessibility, and affordability [4]
- Downside: payload mass less than 5 kg; higher risk than small rigid probe
- Upside: Brings packaging and deployment into the design space → allows for unique and novel ways for a mission designer to accomplish things that otherwise would not be possible

✓ Nano-ADEPT is *simple*

- Mechanical devices such as springs and pins are used for deployment and tensioning of the 3D woven carbon fabric

✓ Nano-ADEPT is *accessible*

- Broad application for small payloads at destinations of interest:
  - Nanosat payload return from LEO
  - High-altitude Van Allen belt radiation experiments
  - Mars Geophysical Network as secondary payload from Mars cruise stage
  - Venus secondary payload atmospheric probes containing balloons

✓ Nano-ADEPT is *affordable*

- High value verification-by-test at full scale is possible using ground test facilities
- Low cost flight testing through NASA's Flight Opportunities Program

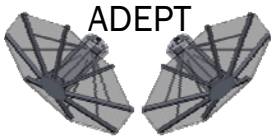

Mission Environments and Design Approach

	Mars Secondary Payload			Earth Entry from LEO			Venus Secondary Payload		
Entry Conditions* ($V_{inertial}$, EFPA)	6 km/s, -15°			7.6 km/s, -1°			11.5 km/s, -8.5°		
Cone Angle, °	70	70	70	70	70	70	70	70	70
Deployed Diameter, m	0.7	0.7	0.7	0.7	0.7	0.7	0.7	0.7	0.7
Entry Mass, kg	15	10	5	15	10	5	15	10	5
Ballistic Coefficient, kg/m^2	22.5	15	7.5	22.5	15	7.5	22.5	15	7.5
Peak Heat Flux, W/cm^2	85	71	52	90	74	52	472	393	286
Total Heat Load**, kJ/cm^2	2.5	2.0	1.3	9.8	7.9	5.5	13.9	11.1	7.6

- *Actual entry conditions are sensitive to mission specifics. These are examples of "typical" entry conditions.
- **Correlated to fabric thickness. See Kazemba [7] for fabric sizing details
- Focus on 0.7 m diameter, 70° configurations for mass efficiency, "stable-enough" open-back shape, and testability
- Carbon fabric thickness should not exceed ~6 layers at the 0.7 m diameter scale due to packing concerns
  - Many Mars Secondary entry conditions are feasible with a 6 layer fabric
  - Some Earth Entry from LEO and Venus Secondary Payloads are feasible with a 6 layer fabric
- The Mars Secondary Payload presents a good case study for Nano-ADEPT because there is relatively low sensitivity between entry mass and total heat load (heat load is correlated to fabric thickness)
  - Mission-feasibility does not depend on Nano-ADEPT's structural mass as long as entry mass remains below 15 kg
  - Allows for rapid development of feasible Nano-ADEPT prototypes followed by optimization to increase payload mass or lower entry mass

A "deep dive" into one Nano-ADEPT configuration has broad application for probe science

Nano-ADEPT Notional Secondary Payload Concept

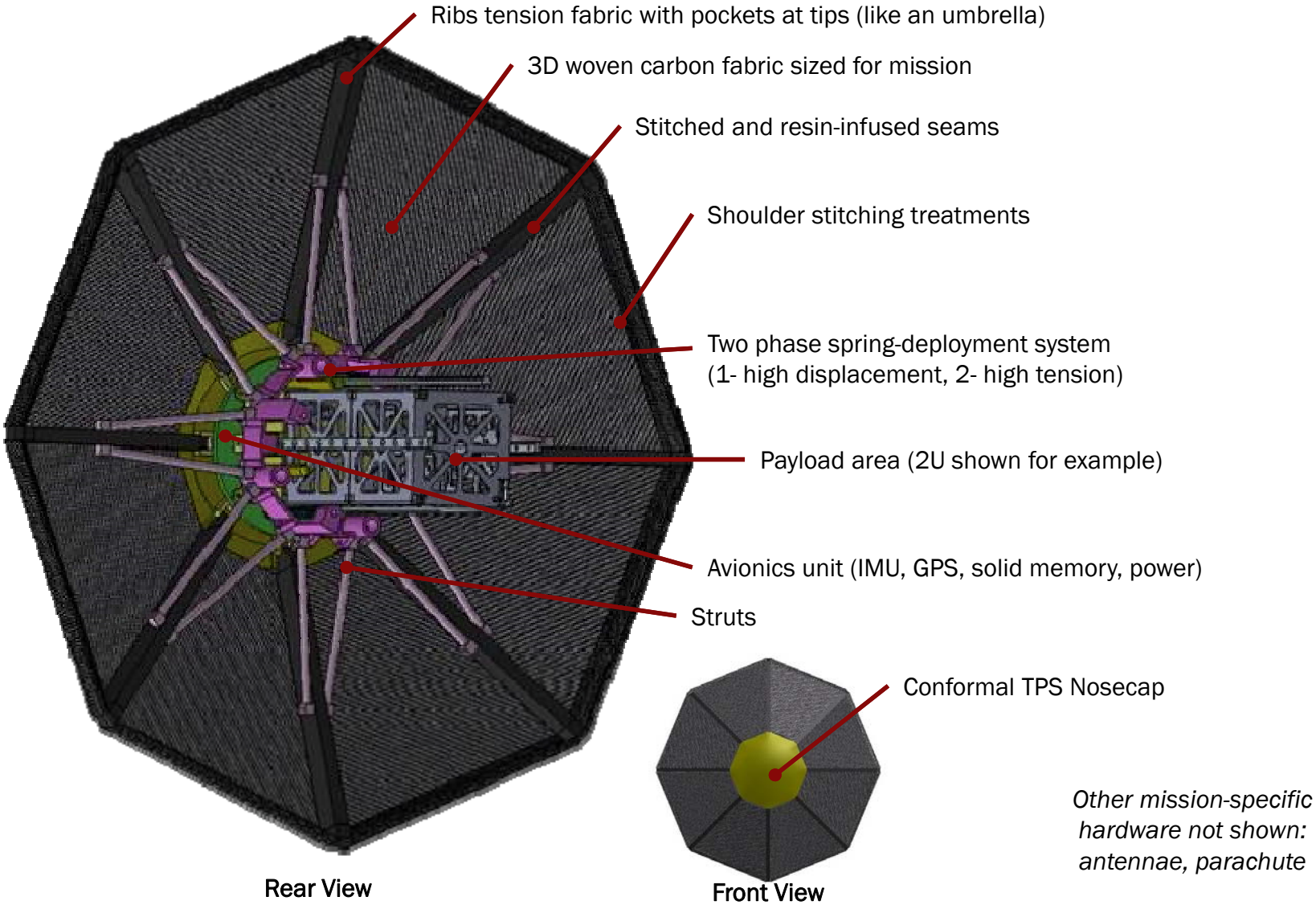

Other mission-specific hardware not shown: antennae, parachute

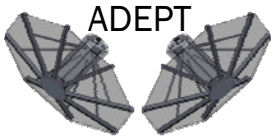

Rapid Test Campaign is Underway Now

- A NASA Ames Center Innovation Fund (CIF) was awarded by the Ames Chief Technologist to rapidly design and test a Nano-ADEPT prototype
  - Deployment testing (funded, tests in Summer 2014)
  - Low-speed wind tunnel test for loads and FSI characterization (funded, tests in January 2015)
- Nano-ADEPT shape/size was chosen through a trade study searching for the best combination of mission performance and "testability" (test like you fly)
- ADEPT project to develop a plan for STMD approval for Nano-ADEPT maturation to TRL 5 through additional testing in FY15 and FY16
  - Large-article "SPRITE-C" Arc Jet test
  - Sounding rocket flight test

Deployed
(cross section view)

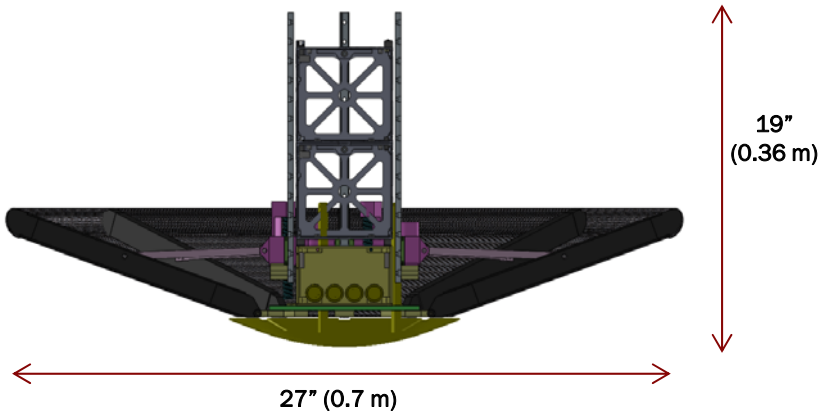

Deployed
(Front View)

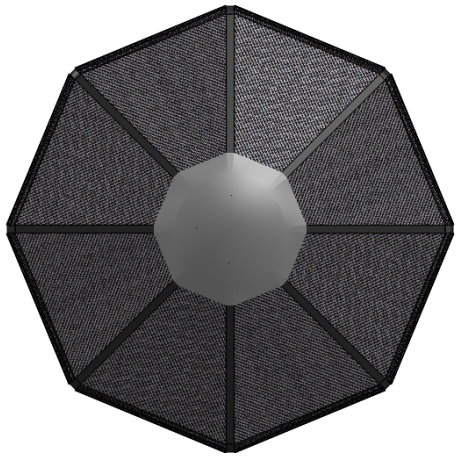

ADEPT

Deployment Testing

- Ames CIF-funded activity
- Prototype fabrication is currently underway

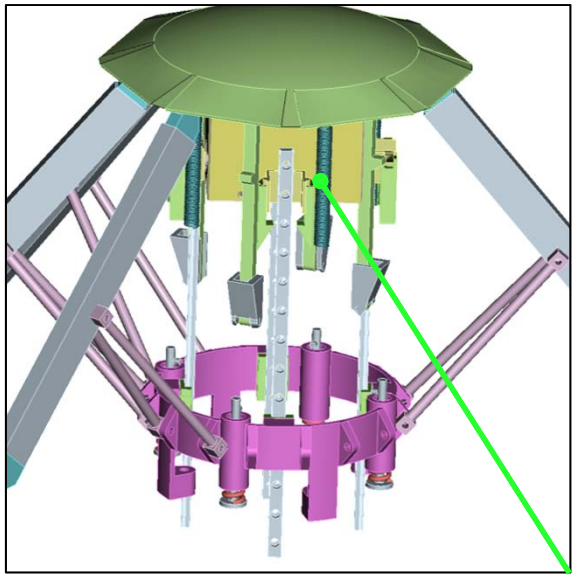

1. Moving ring slides on linear guides with high-displacement spring

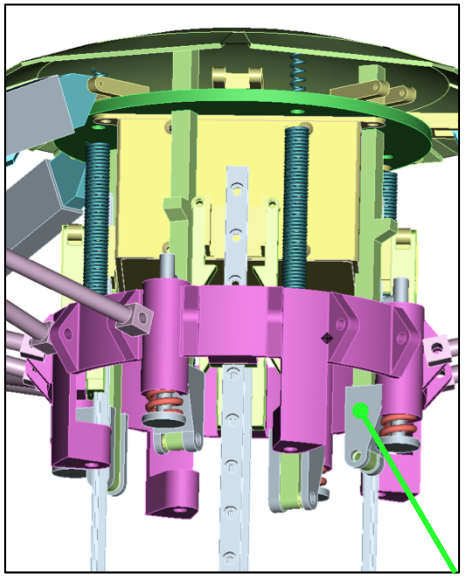

2. Moving ring rides over catches

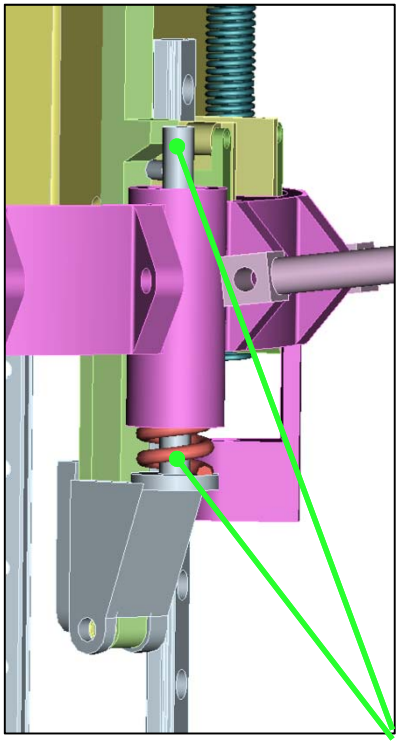

3. Catches snap back. Peg upsets plunger and releases spring. Nose cap pulled back, moving ring forced forward.

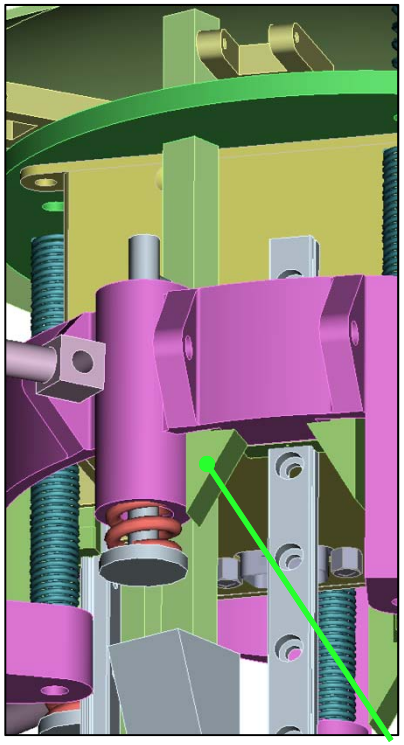

4. Moving ring is captured at full tension by second set of catches attached to linear guide rails

Wind Tunnel Testing – Aero loads

- Ames CIF-funded activity
- Test Objectives
  - Obtain deflected shape at dynamic pressure, pretension, and angle of attack relevant to entry conditions at Earth, Mars, and Venus
  - Observe onset of detrimental aeroelastic behavior as a function of pretension and dynamic pressure
  - Obtain aerodynamic forces and moments vs angle of attack, dynamic pressure, and roll angle
- Instrumentation
  - Photogrammetry
  - Pressure- forebody and aftbody
  - Strut loads

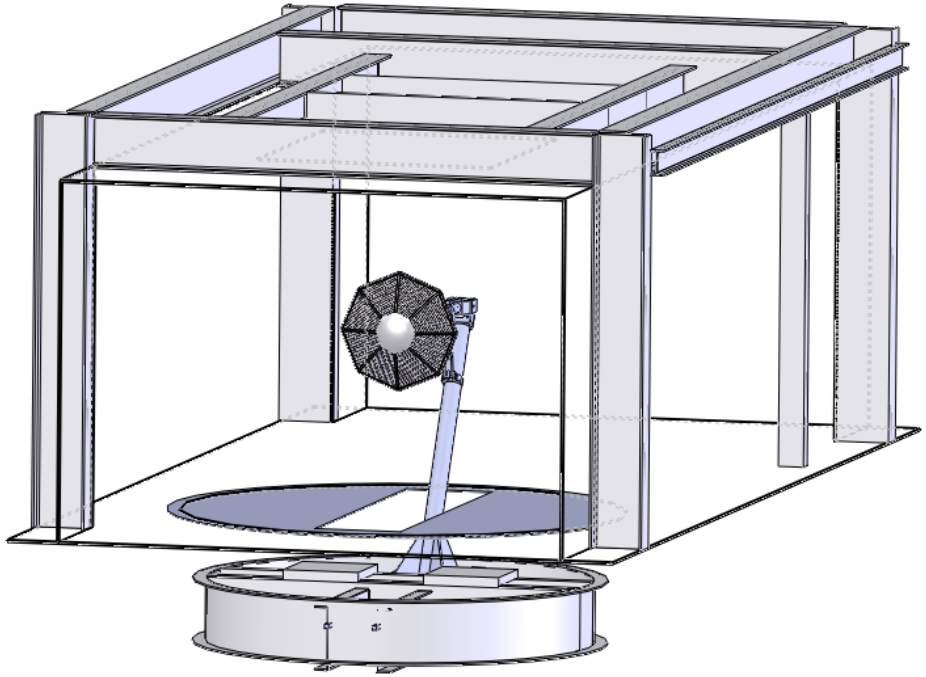

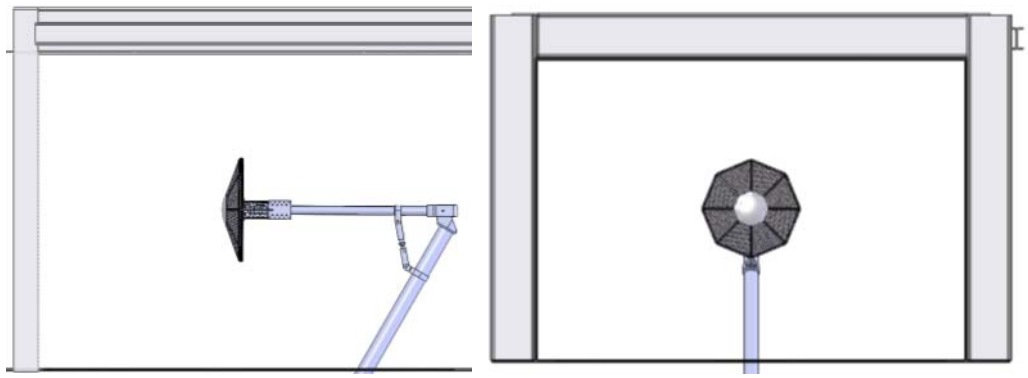

0.7 m diameter ADEPT in Ames 7' x 10' Wind Tunnel

System-Level Arc Jet Testing

- Under investigation for potential STMD funding
- Environments from Mars Secondary DRM
- Test Objectives:
  - Characterize response of Nano-ADEPT TPS materials under relevant aerothermal environments
  - Investigate interface designs for
    - Rigid nose to fabric interface
    - Rigid nose to rib/fabric interface
    - Fabric to rib interface
    - Shoulder close-out

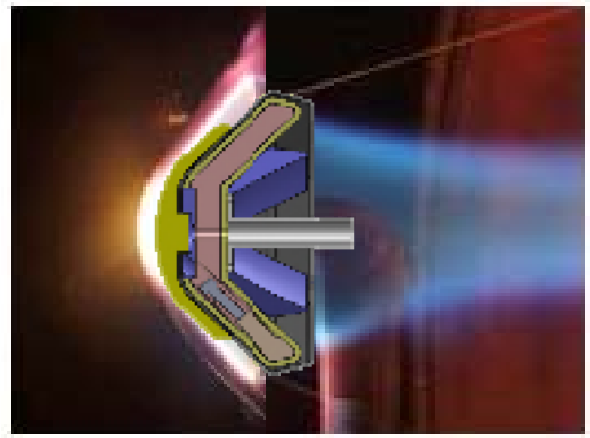

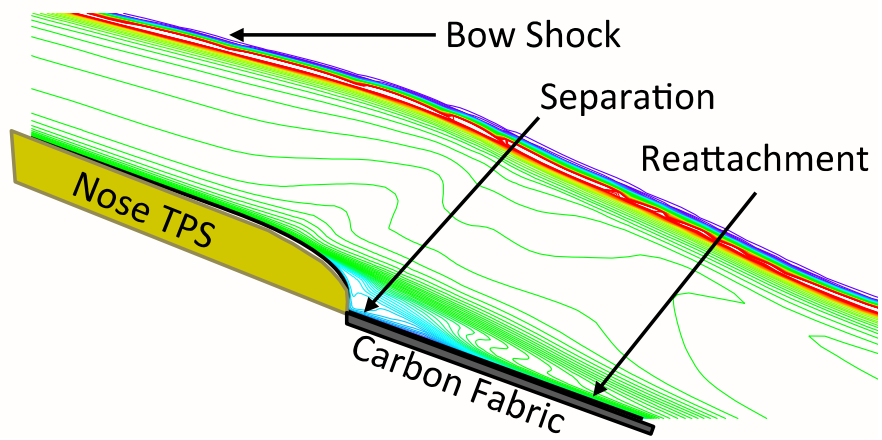

ADEPT

Sounding Rocket Flight Test

ADEPT

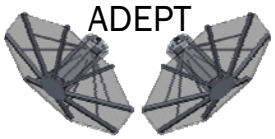

Summary

- Bringing ADEPT to the mainstream for large payloads may be possible by first infusing Nano-ADEPT
  - Nano-ADEPT in 5 years (sub 1-m class)
  - 6 m diameter to Venus or 10 m / 12 m to Mars in a decade
  - 15-23 m diameter Human Mars in 2 decades

- Current activities focus on maturation of Nano-ADEPT for a Mars Secondary Payload DRM, but also applies to:
  - Earth Entry from LEO
  - Venus Secondary Payload Missions

- A test campaign to rapidly mature Nano-ADEPT is underway now
  - Deployment Testing (CIF-funded)
  - Wind Tunnel Aero Loads Testing (CIF-funded)
  - Relevant Scale Arc Jet Test (pending FY15 STMD budget approval)
  - Sounding Rocket Flight Test (pending FY15 STMD budget approval)

Acknowledgements

- Entire ADEPT team for their creativity and specific contributions to this presentation

- Ames Chief Technologist for CIF Award "Nano Entry System for Cubesat-Class Payloads"
  - Program Director: Harry Partridge, NASA Ames Chief Technologist

- Game Changing Development Program for their support of current Nano-ADEPT investigations and consideration for FY15-16 support
  - Project Manager: Paul Wercinski

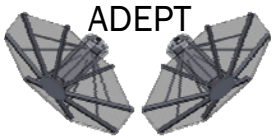

References

1 Smith, B. et al., "Venus In Situ Explorer Mission Design using a Mechanically Deployed Aerodynamic Decelerator," IEEE Aerospace Conference, Big Sky, MT, March 2013.

2 Venkatapathy, E. et al., "Mechanically-Deployed Hypersonic Decelerator and Conformal Ablator Technologies for Mars Missions," Concepts and Approaches for Mars Exploration Workshop, Houston, TX, June 2012.

3 Venkatapathy, E. et al., "Adaptive Deployable Entry and Placement Technology (ADEPT): A Feasibility Study for Human Missions to Mars,"21st AIAA Aerodynamic Decelerator Systems Technology Conference and Seminar, Dublin, Ireland, May 2011.

4 Anthony, S.D., Johnson, M.W., Sinfield, J.V., and Altman, E.J, *Innovators Guide to Growth*, Innosight LLC, 2008.

5 Mission Design Center Staff, NASA Ames Research Center, "Small Spacecraft Technology State of the Art," NASA/TP-2014-216648, February 2014.

6 "Nanosats are a Go!", *The Economist*, Technology Quarterly Q2 2014, June 2014.

7 Kazemba, C. et al., "A Versatile 3D-Woven Carbon Fabric for Broad Mission Application of ADEPT," International Planetary Probe Workshop 11, Pasadena, CA, June 2014.