This document and its content is the property of Astrium [Ltd/SAS/GmbH] and is strictly confidential. It shall not be communicated to any third party without the written consent of Astrium [Ltd/SAS/GmbH].

Phootprint : A European Phobos Sample Return Mission
IPPW 11

Simon Barraclough, Andrew Ratcliffe, Robert Buchwald, Heloise Scheer, Marc Chapuy, Martin Garland, Airbus Defence and Space
Denis Rebuffat, ESA ESTEC

AIRBUS
DEFENCE & SPACE

This document and its content is the property of Astrium [Ltd/SAS/GmbH] and is strictly confidential. It shall not be communicated to any third party without the written consent of Astrium [Ltd/SAS/GmbH].

Contents

- Why Phobos?
  - Background
  - The Destination
- Phootprint Mission Overview
  - The Spacecraft
  - The Mission
- Key Sample Return Technologies
  - Proximity GNC
  - Sample Acquisition, Transfer and Containment System
  - Landing Subsystem
  - Earth Re-entry Capsule
- Future Activities

AIRBUS DEFENCE & SPACE

This document and its content is the property of Astrium [Ltd/SAS/GmbH] and is strictly confidential. It shall not be communicated to any third party without the written consent of Astrium [Ltd/SAS/GmbH].

Why Phobos? – Background

- ESA Roadmap :
  - Phootprint is a candidate mission of the Mars Robotic Exploration Preparation Programme 2 (MREP-2)
    - Optional ESA Programme with the objective to reinforce Europe's position in Mars robotic exploration and prepare for a European contribution to a future international Mars Sample Return Mission
  - Phootprint mission study
    - ESA funded pre-phase A/feasibility study
    - 8 month duration

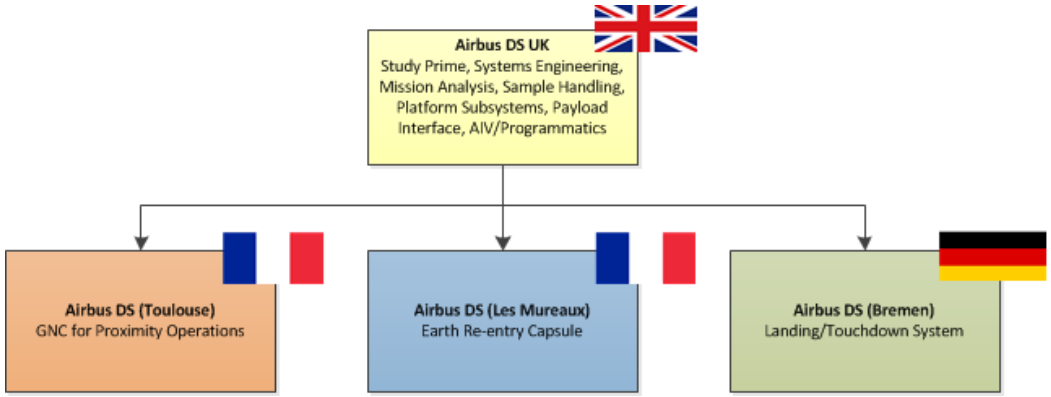

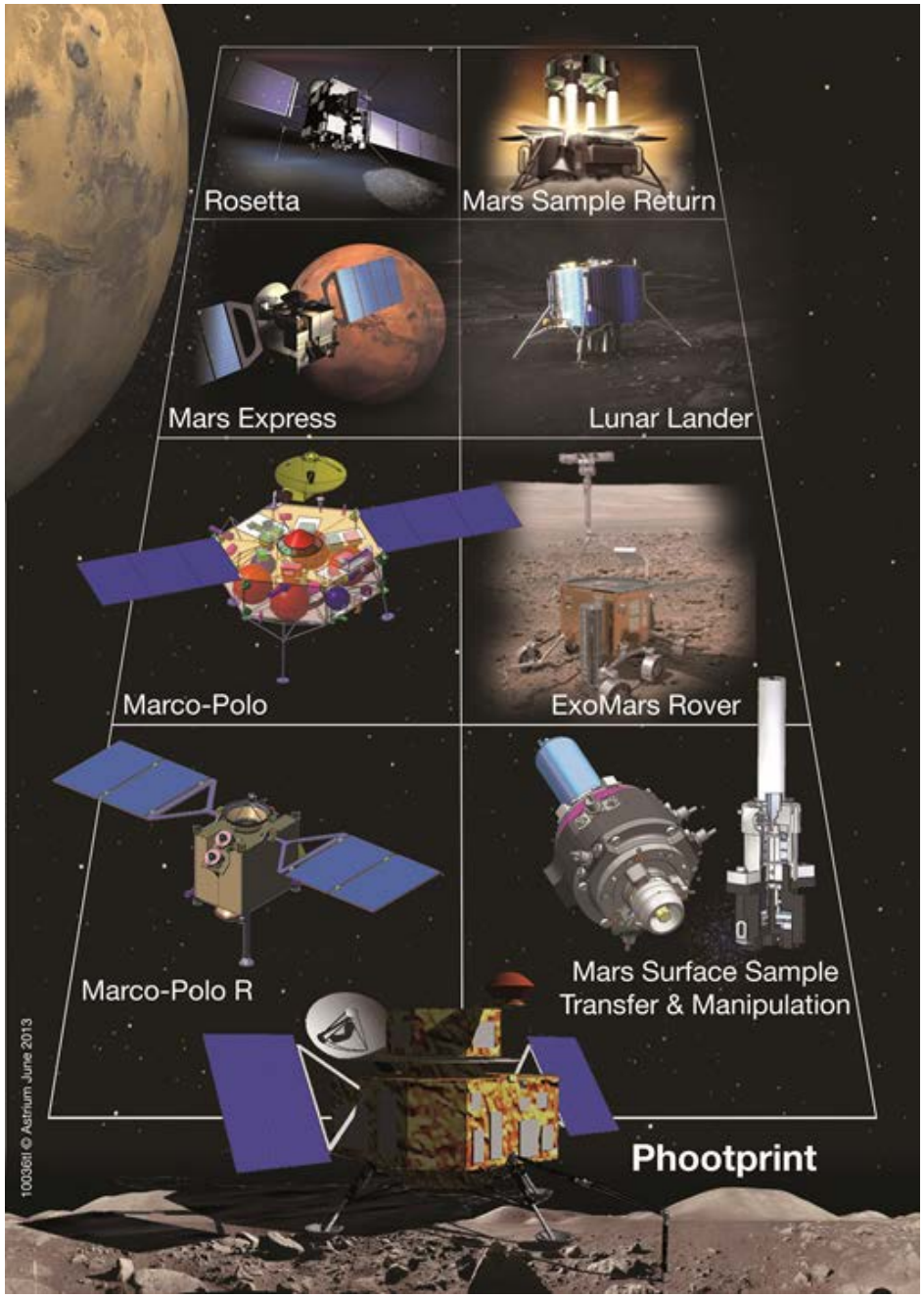

AIRBUS DEFENCE & SPACE

This document and its content is the property of Astrium [Ltd/SAS/GmbH] and is strictly confidential. It shall not be communicated to any third party without the written consent of Astrium [Ltd/SAS/GmbH].

Why Phobos? – The Destination

- Top-level science goal :
  - *Understand the formation of the Martian moons Phobos and Deimos and put constraints on the evolution of the solar system (co-formation, capture, impact ejecta)*
- Why Phobos?
  - Deimos thick regolith layer due to seismic shaking and/or ejecta re-accumulation → pristine material difficult/impossible to access
- Why Sample Return?
  - High accuracy structural and spectroscopic analysis not possible with in-situ analysis
  - Allows for technology to be developed to support a future Mars Sample Return Mission

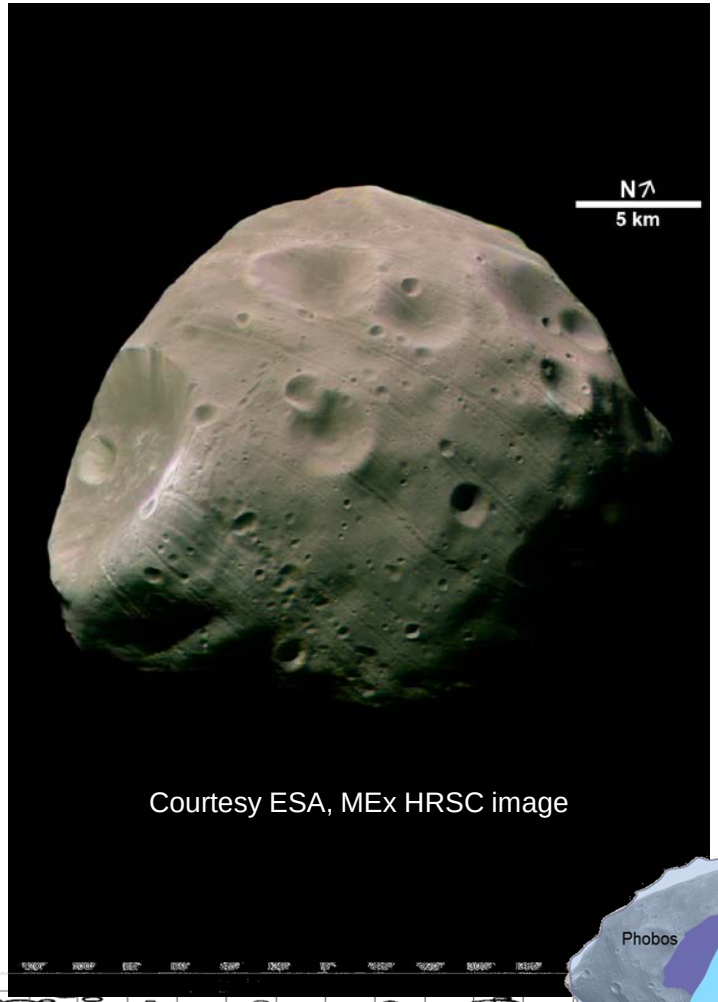

Courtesy ESA, MEx HRSC image

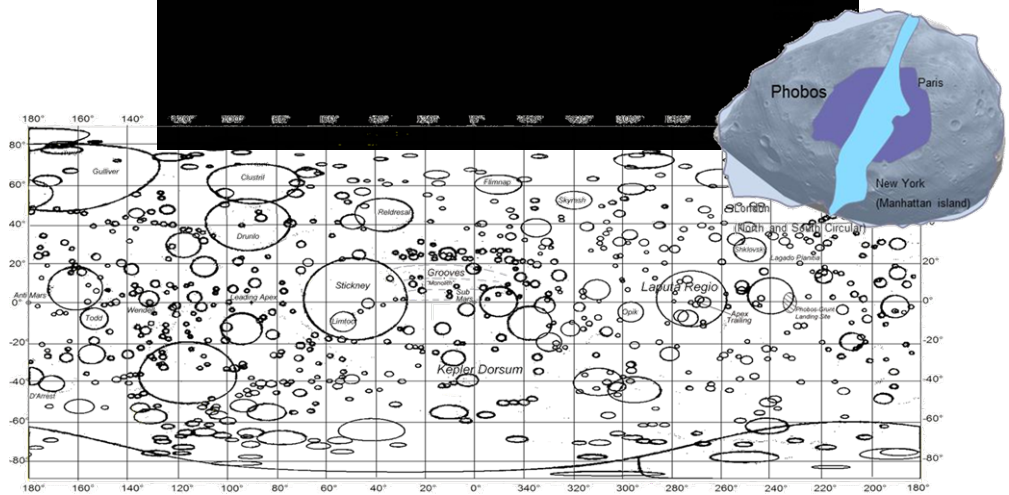

This document and its content is the property of Astrium [Ltd/SAS/GmbH] and is strictly confidential. It shall not be communicated to any third party without the written consent of Astrium [Ltd/SAS/GmbH].

Phootprint Mission Overview

- Key Mission Objectives :
  - Return approximately 100g of loose material from the surface of Phobos
  - Access at least 50% of the Phobos surface for the sampling operations
    - Landing site selected by Science team during mission post extensive global and local mapping campaign (grooves of particular interest and drove 100m major axis landing accuracy)
  - Maximise science return on the returned sample
    - Strict requirements on surface contamination
    - Goal of 800g load on sample
  - Static landing (no touch-and-go)
    - Allows for more precise selection of sampling point
  - Target of 2024 launch with 2025/2026 backup
    - Ariane 5 ECA baselined
    - Earth swingby provides greater launcher margin

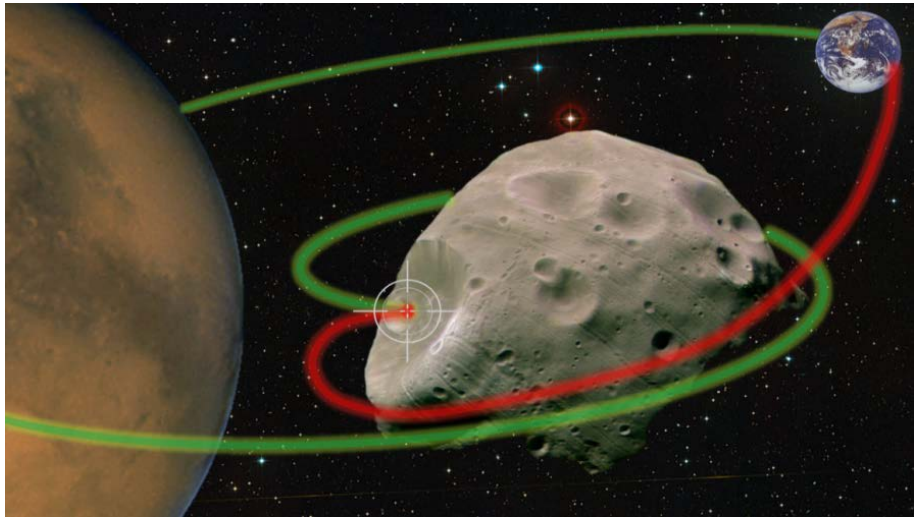

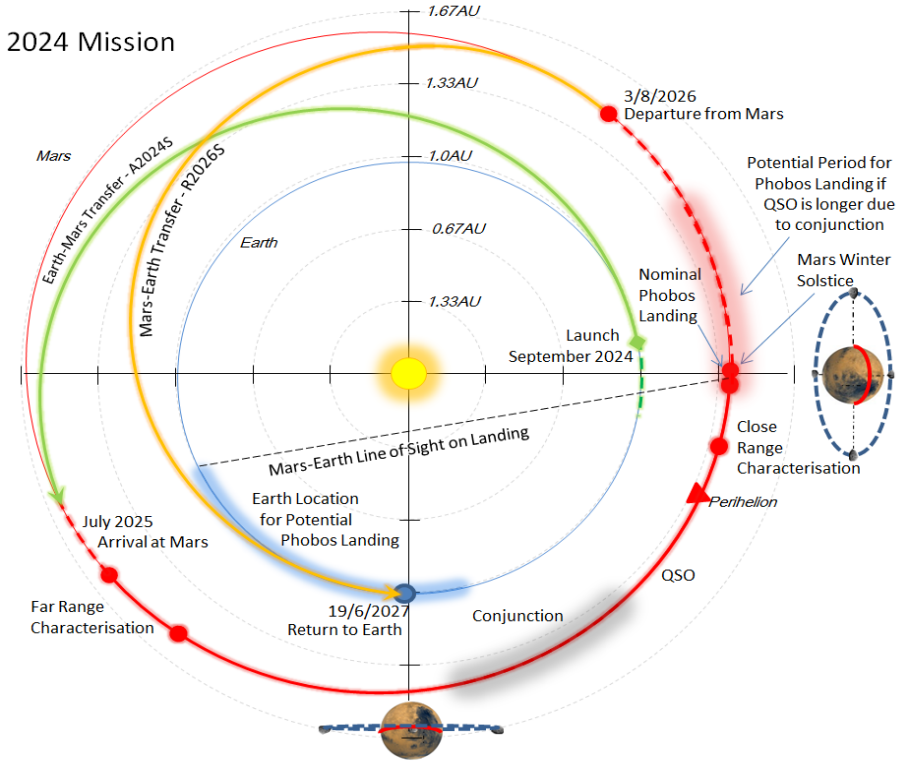

AIRBUS DEFENCE & SPACE

This document and its content is the property of Astrium [Ltd/SAS/GmbH] and is strictly confidential. It shall not be communicated to any third party without the written consent of Astrium [Ltd/SAS/GmbH].

Phootprint Mission Overview

Characteristic	Value
Sample Mass Target	100 g
Number of Stages	3
Total Wet Mass	4200 kg
Launch date	2024 baseline 2025/2026 backup
Launcher	Ariane 5 ECA
Mission Lifetime	3.5 yrs
Surface Stay	7 Earth Days
Sampler	Rotatory Bristles
Touch Down Type	Static Landing
Descent Scenario	Descent with Hover Station
ERC Re-entry	Passive
Maximum impact deceleration of the sample	1700g

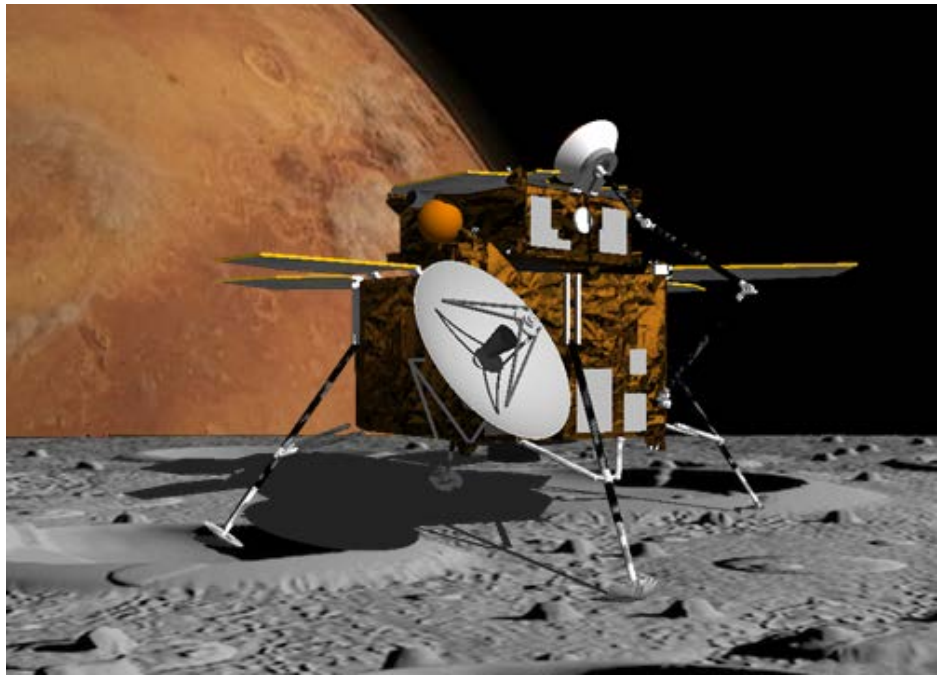

Airbus DS Phootprint Reference Design Key Characteristics

AIRBUS DEFENCE & SPACE

Phootprint Mission Overview

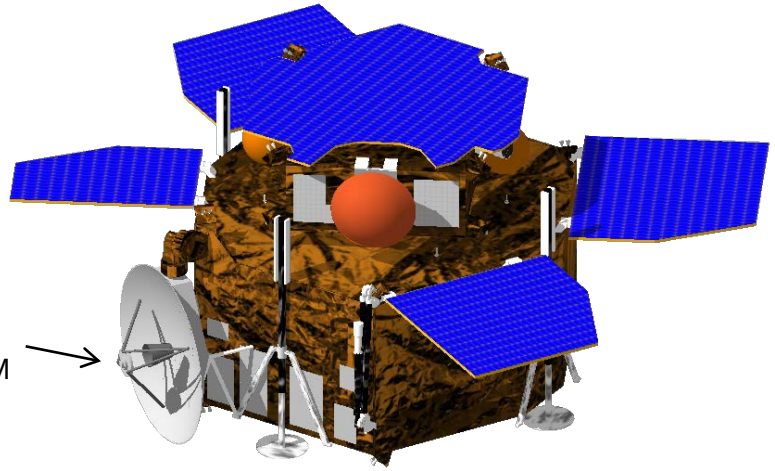

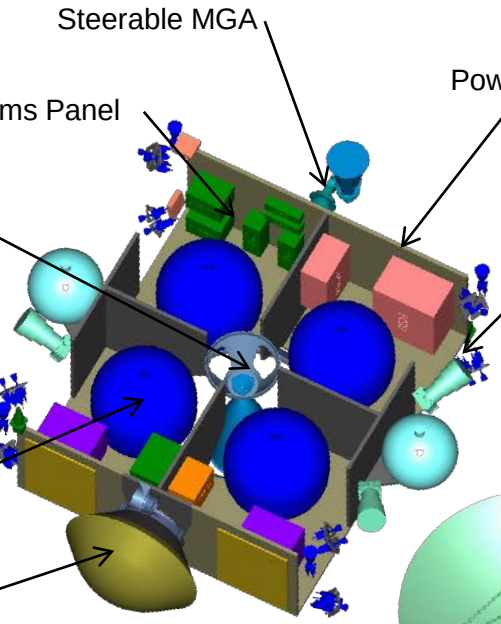

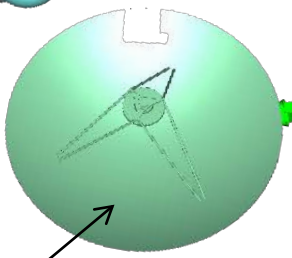

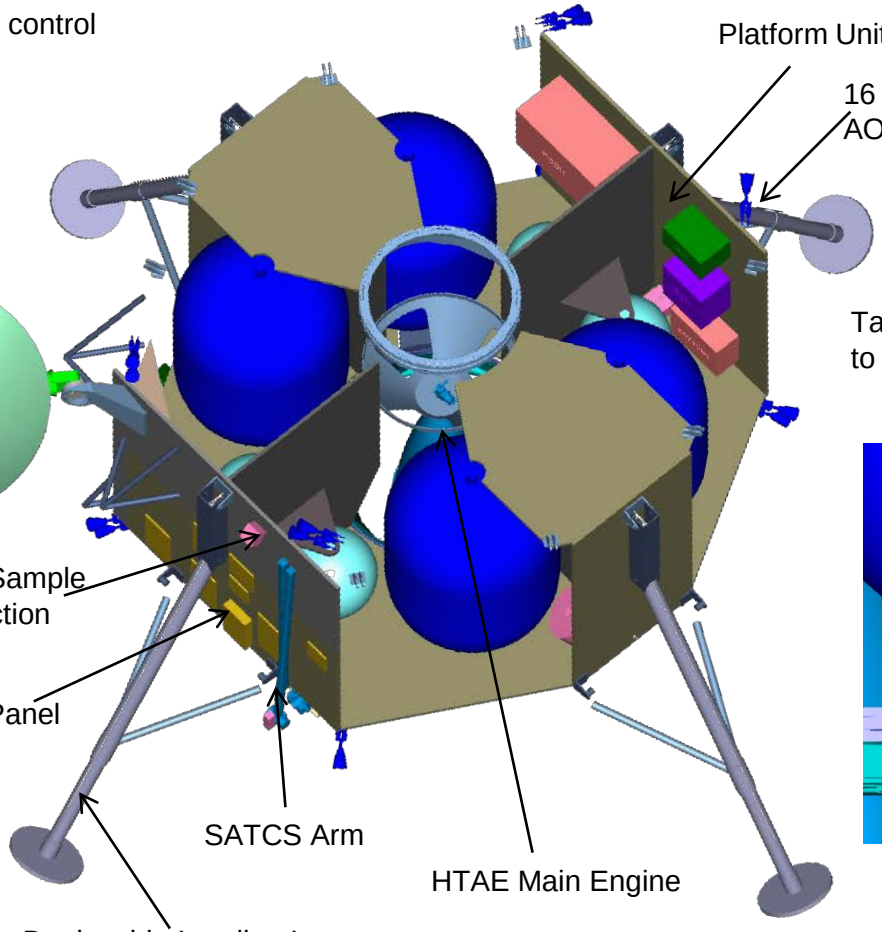

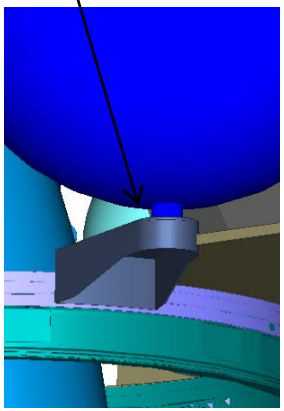

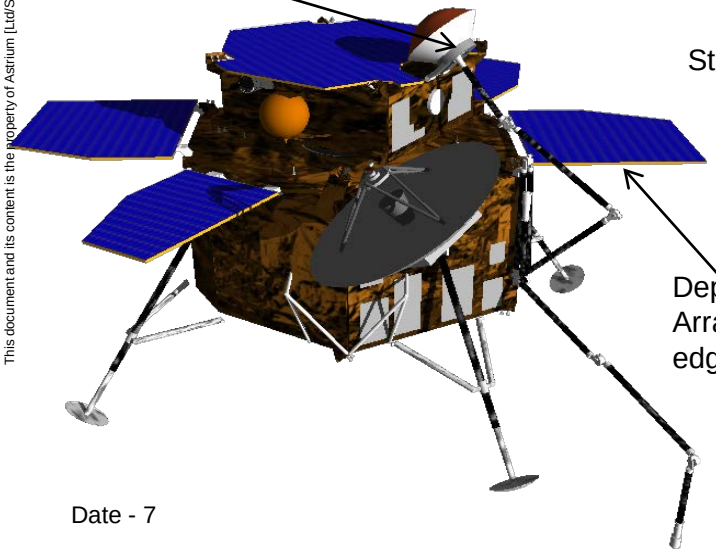

CFRP Central Cylinders/Cones not shown

This document and its content is the property of Astrium [Ltd/SAS/GmbH] and is strictly confidential. It shall not be communicated to any third party without the written consent of Astrium [Ltd/SAS/GmbH].

AIRBUS DEFENCE & SPACE

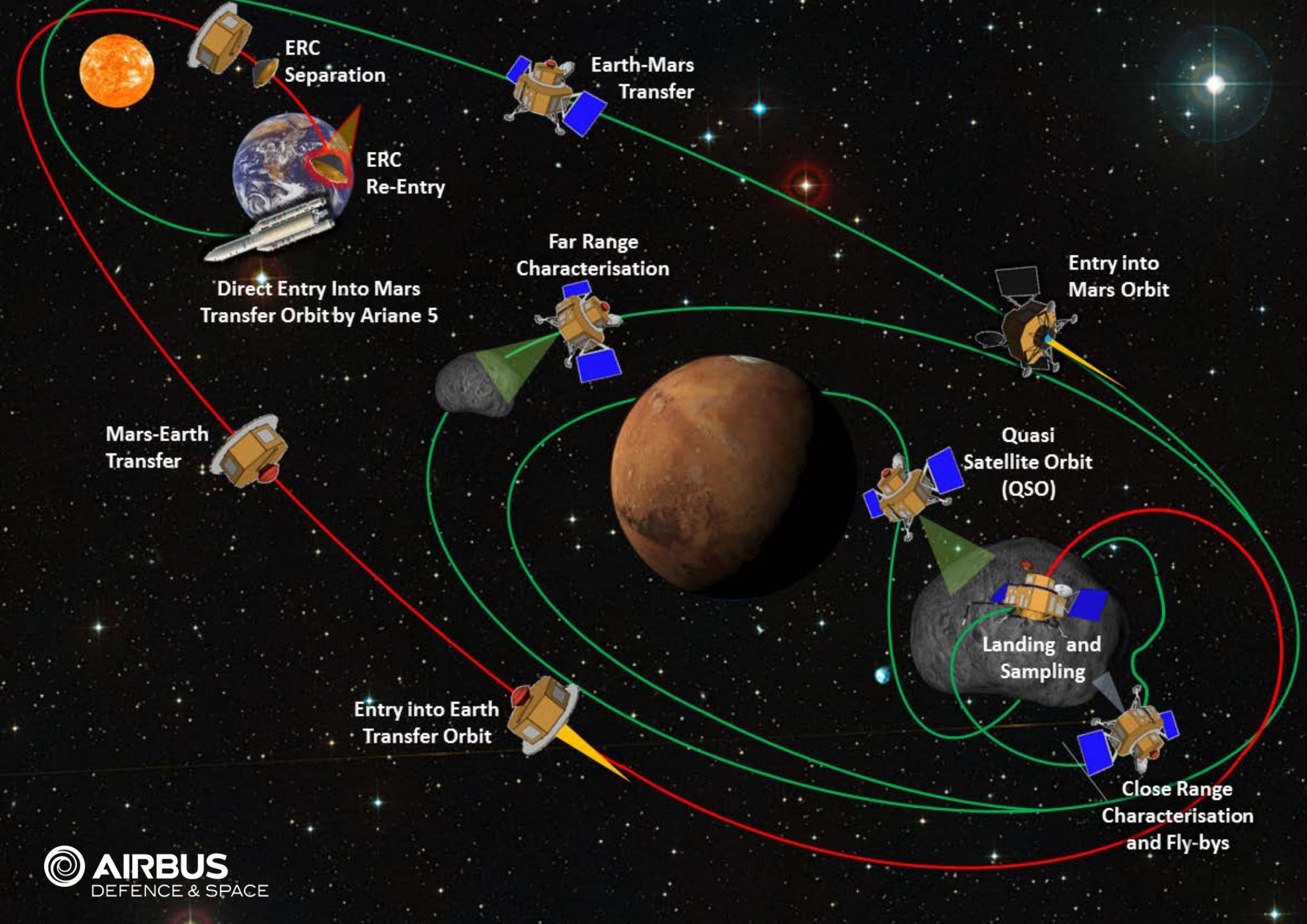
ERC
Separation
Earth-Mars
Transfer
ERC
Re-Entry
Direct Entry Into Mars
Transfer Orbit by Ariane 5
Far Range
Characterisation
Entry into
Mars Orbit
Mars-Earth
Transfer
Quasi
Satellite Orbit
(QSO)
Landing and
Sampling
Entry into Earth
Transfer Orbit
Close Range
Characterisation
and Fly-bys
AIRBUS
DEFENCE & SPACE

Phootprint
Phobos Operations

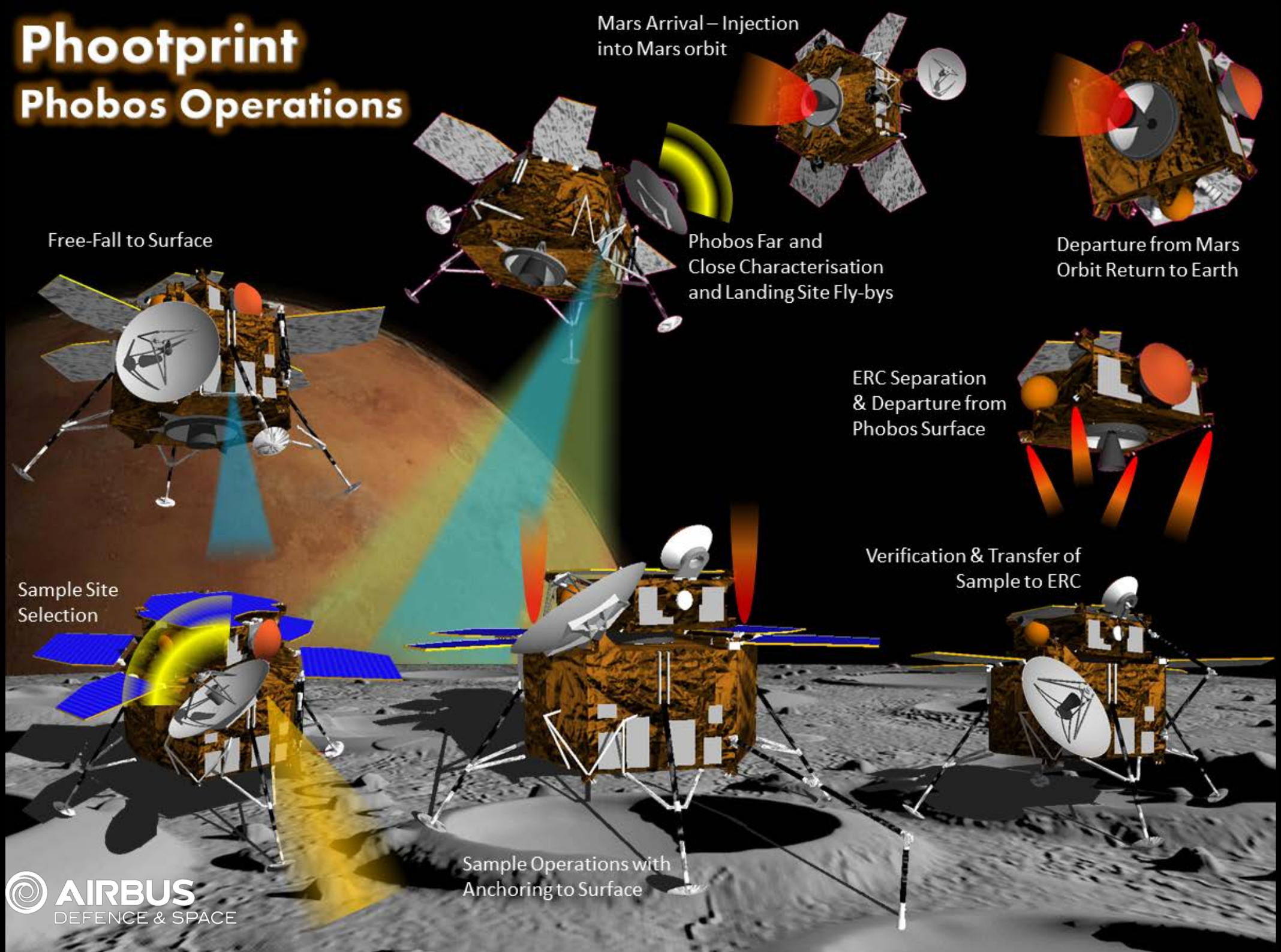

Key Sample Return Technologies

- GNC for proximity operations :
  - Design Drivers :
    - Minimise surface contamination → sig. impacts on the efficiency and free-fall height (molecules deposited < $10^{+14}/cm^2$)
    - 50 m goal for landing accuracy (semi major axis) → influences choice of scenario
    - Descent scenario to include both a rehearsal and abort → ΔV driver
  - Hover-station vs Direct Descent
    - Hover :
      - +Ve's : Higher landing site accuracy (absolute navigation performed during descent at hovering station)
      - -Ve's : Complex ground ops (time constrained) & ΔV cost
    - Direct :
      - +Ve's : Lower ΔV, no-time constrained ground operations
      - -Ve's : Lower landing accuracy as absolute navigation is not performed during descent and accuracy relies on the initial position knowledge

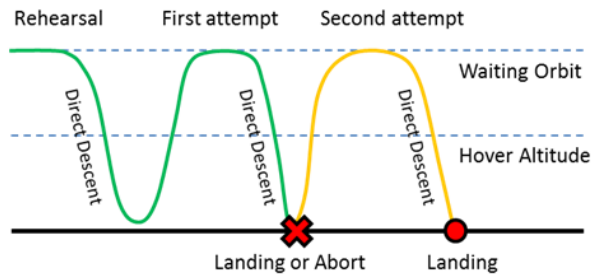

Direct Descent to the Surface

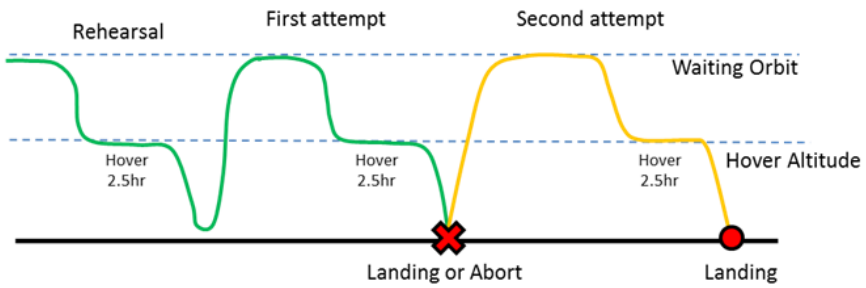

Descent to the Surface with Hover for Improved Accuracy

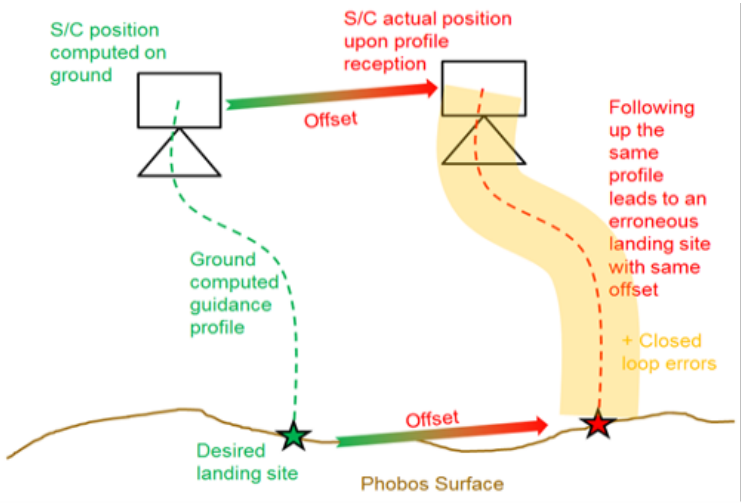

This document and its content is the property of Astrium [Ltd/SAS/GmbH] and is strictly confidential. It shall not be communicated to any third party without the written consent of Astrium [Ltd/SAS/GmbH].

AIRBUS DEFENCE & SPACE

Impact on Landing Location – LS270 Landing Example

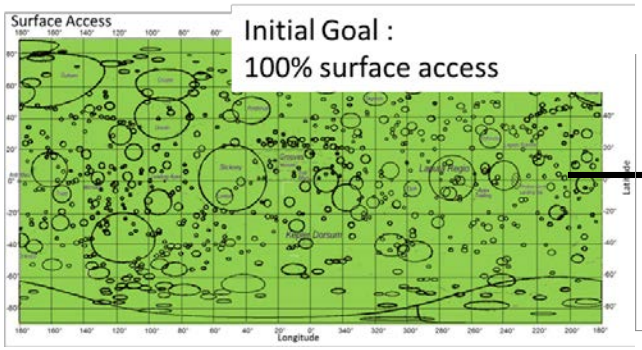

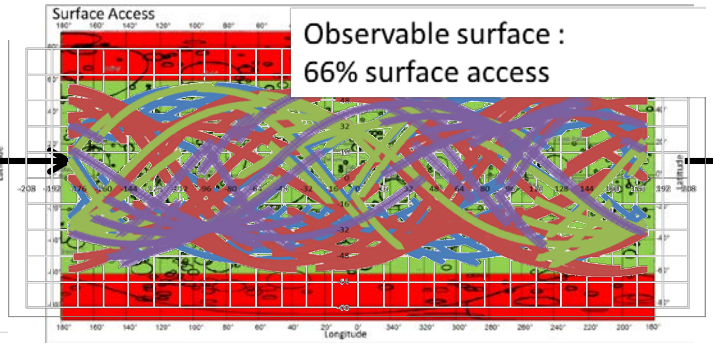

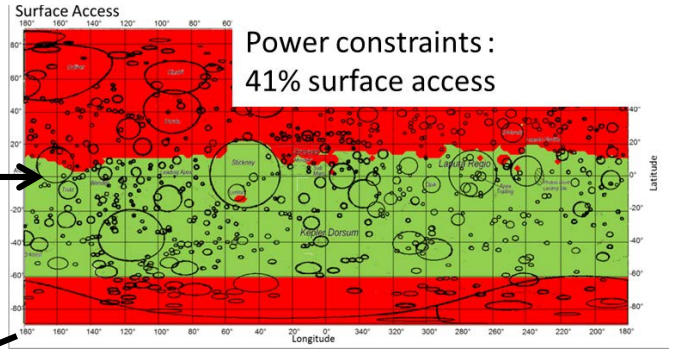

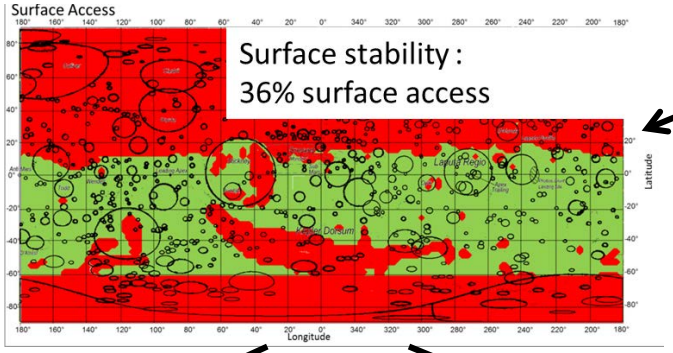

Less Accuracy – More Access

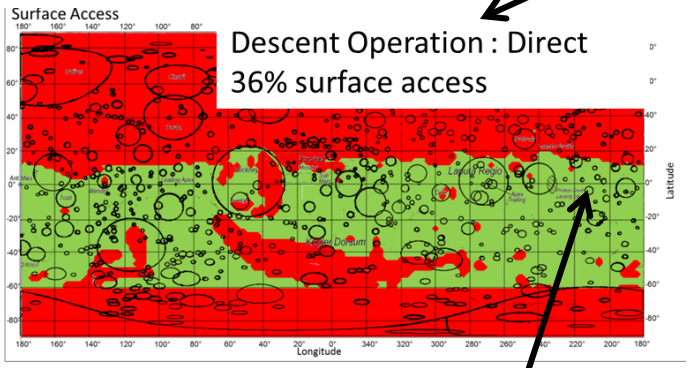

More Accuracy – Less Access

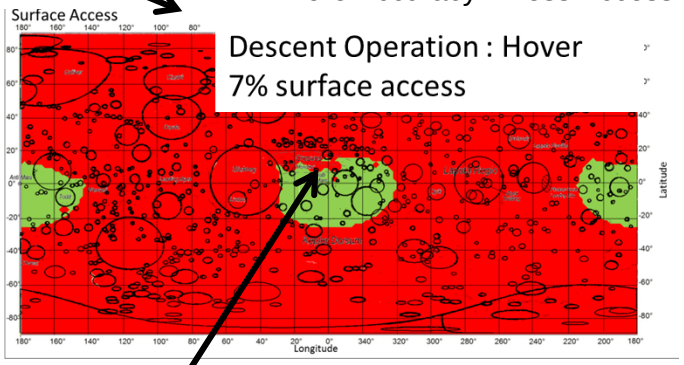

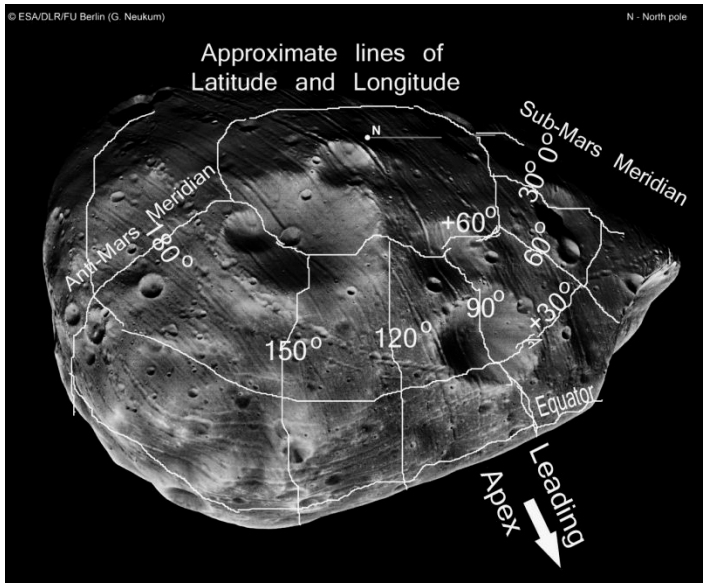

Phobos-Grunt Planned Landing Site

Grooves radiating from Stickney Crater

This document and its content is the property of Astrium [Ltd/SAS/GmbH] and is strictly confidential. It shall not be communicated to any third party without the written consent of Astrium [Ltd/SAS/GmbH].

AIRBUS DEFENCE & SPACE

This document and its content is the property of Astrium [Ltd/SAS/GmbH] and is strictly confidential. It shall not be communicated to any third party without the written consent of Astrium [Ltd/SAS/GmbH].

Key Sample Return Technologies

- Sample Acquisition Transfer and Containment System :
  - Rotary Bristle Sampler Mechanism : On-going ESA funded and internal R&D development activity
    - Selected as it requires a much lower sampling force (important for surface dynamics), on-going interest in regolith mechanics in microgravity
    - Backup sampling through sticky pads on sample container
  - 2 m 4DoF Robotic Arm : Supported by UKSA development activity LARAD
  - Sample container : Sized for lowest density, includes beacon for ERC descent
  - ERC Mechanism : Hinge to rotate ERC and incorporates spin-up and eject mechanism

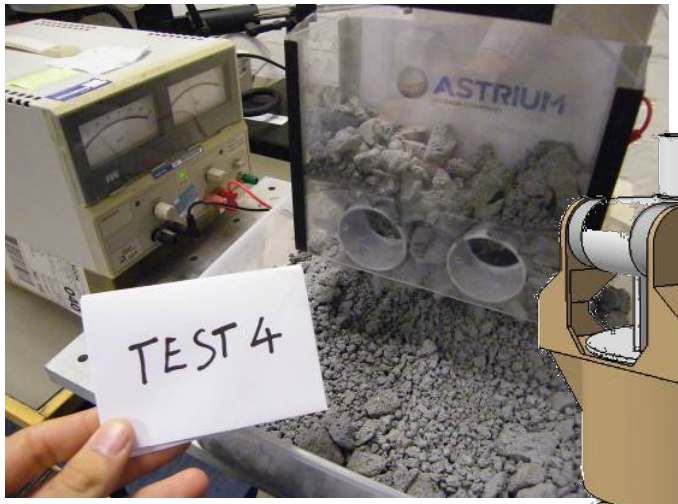

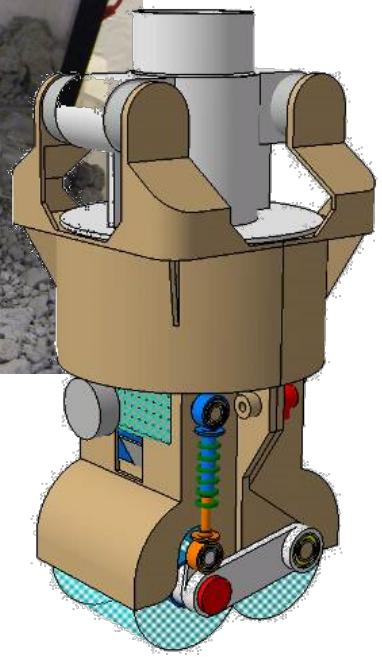

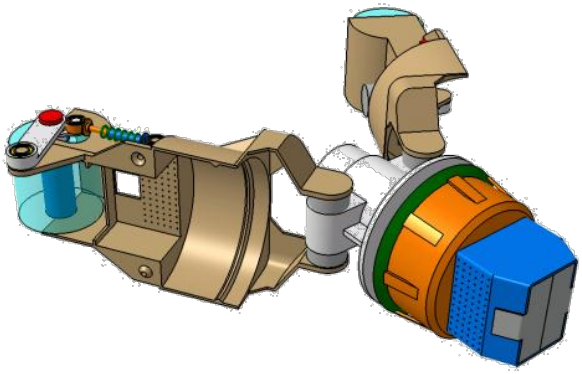

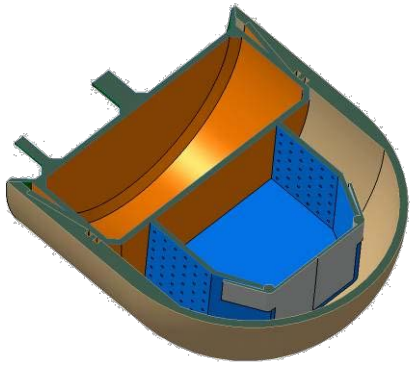

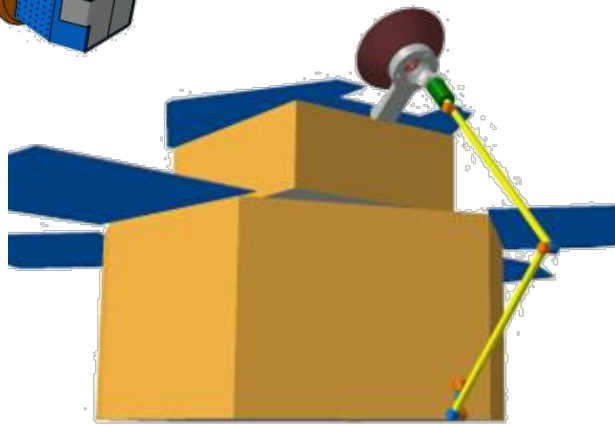

AIRBUS DEFENCE & SPACE

This document and its content is the property of Astrium [Ltd/SAS/GmbH] and is strictly confidential. It shall not be communicated to any third party without the written consent of Astrium [Ltd/SAS/GmbH].

Key Sample Return Technologies

- Landing Subsystem :
  - Key Objective:
    - Robustness regarding touchdown conditions and surface features (slope, boulders, soil properties)
  - Design Drivers:
    - Very low gravity, 0.5m ground clearance (boulders) and CoM (significantly higher compared to Phobos Grunt)
      →Leg configuration subst. different from Phobos-Grunt
      →req. hold-down for stabilization at touchdown
  - Key Characteristics :
    - 4 cantilever type landing legs with crushable Aluminium honeycomb shock absorber and secondary load limiters
    - Deployable latching bracket configuration
    - Ground contact sensor based on contact loads
  - Verification and Heritage:
    - Extensive analysis performed to determine worst case landing conditions using the in-house landing dynamics software toolbox A^{3}LDS (implemented in MSC.ADAMS)
    - Developed from extensive European design and test heritage incl. Lunar Lander, Philae, Marco-Polo

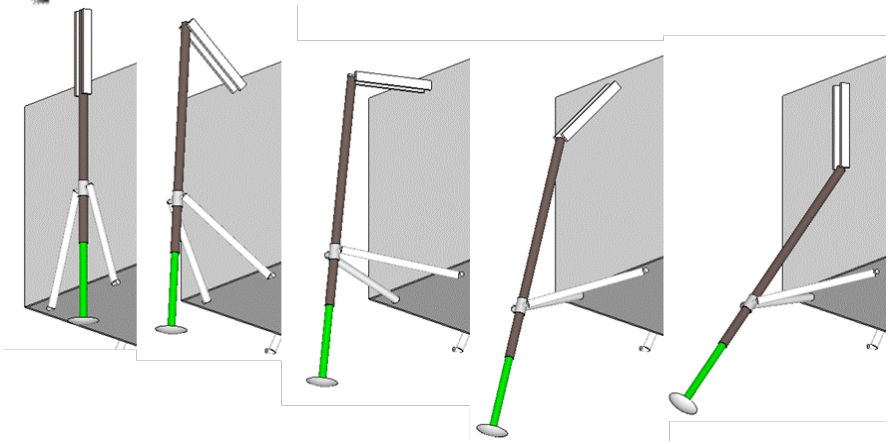

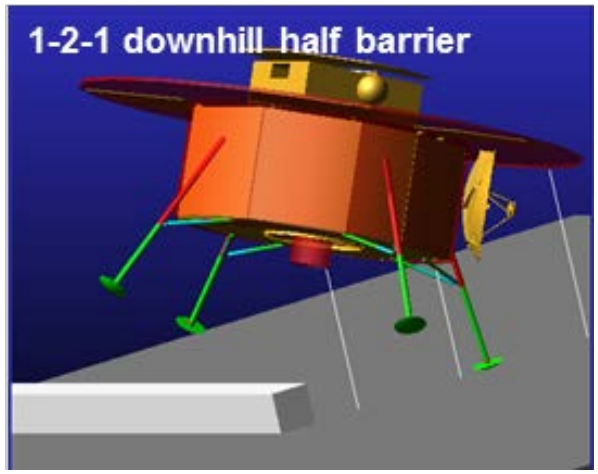

AIRBUS DEFENCE & SPACE

Key Sample Return Technologies

- ERC :
  - Key Characteristics :
    - Fully passive concept (ballistic re-entry, no parachute, hard landing on ground)
    - Hayabusa-like Aeroshape baselined (Ø 750mm, ≈30kg)
      - Stable concept
      - Ongoing dynamic stability tests (ESA TRP)
    - High speed entry (> 12km/s)
      - FS Thermal Protection System : ASTERM
    - Hard landing
      - Impact analysis performed: Mechanical design ensures sample deceleration < 1300g
      - Soil becomes an extension of the crushable allowing fine tuning for flight
    - Beacon included within sample container
    - Post landing thermal design ensures sample container temperature < 40˚C

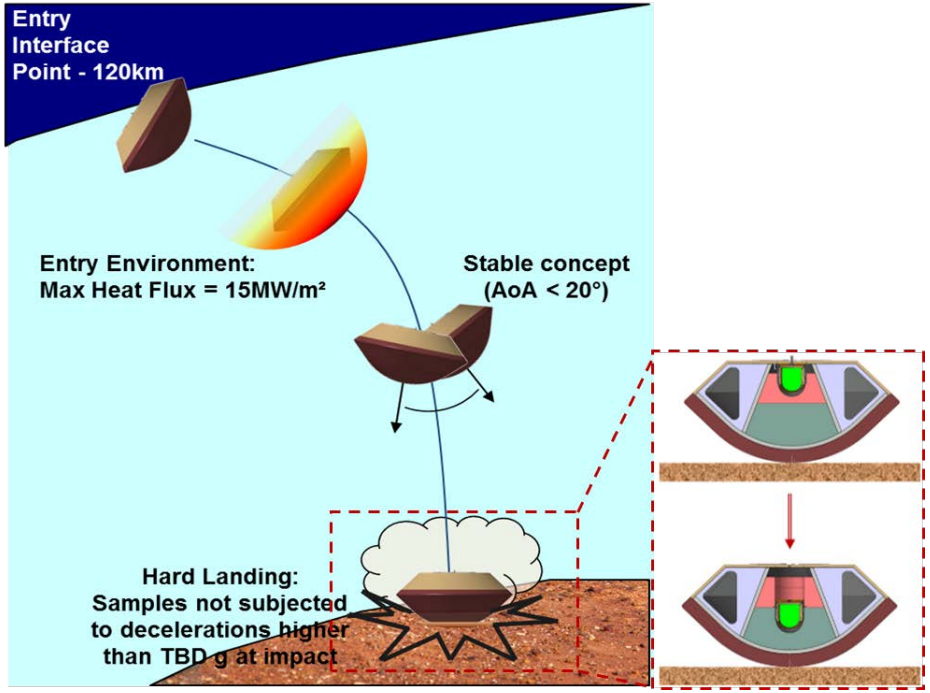

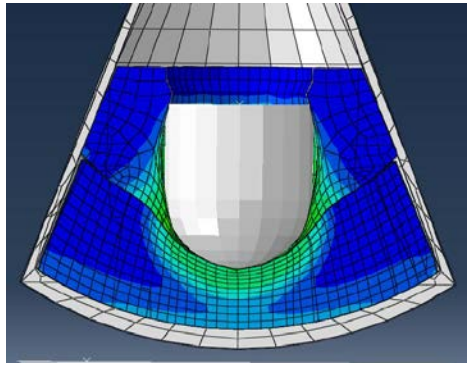

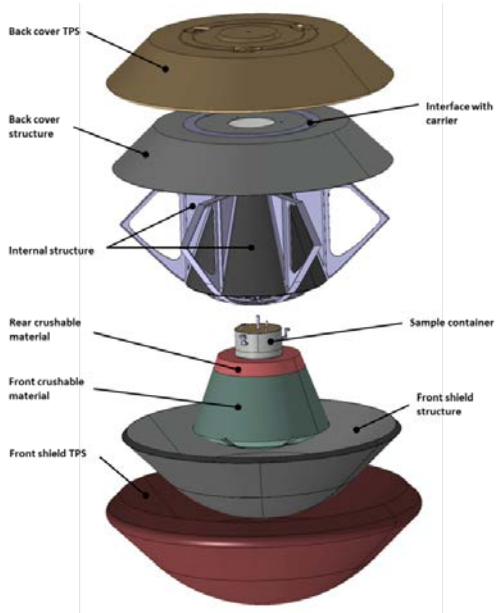

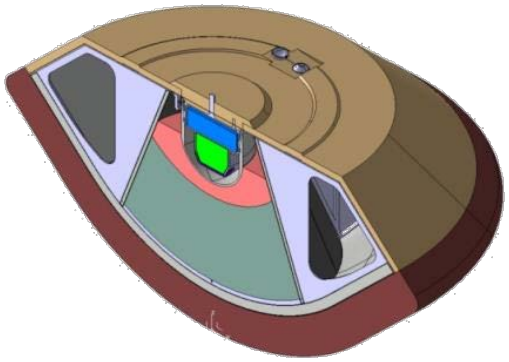

This document and its content is the property of Astrium [Ltd/SAS/GmbH] and is strictly confidential. It shall not be communicated to any third party without the written consent of Astrium [Ltd/SAS/GmbH].

AIRBUS DEFENCE & SPACE

This document and its content is the property of Astrium [Ltd/SAS/GmbH] and is strictly confidential. It shall not be communicated to any third party without the written consent of Astrium [Ltd/SAS/GmbH].

Future Activities

- The Pre-Phase A study demonstrates that a Phobos Sample Return mission is feasible.
  - Can meet the key objective of a 100 g sample return
  - Compliant with 2024 launch with 2025 backup
    - 2026 is possible with some effort applied to mass and restriction in landing sites
  - Surface access dependent on landing strategy – access vs accuracy trade
  - Can return sample to Earth with a passive landing at Woomera without subjecting the sample to g-loads greater than 2000g

- Particular attention is required :
  - Further mass efficiencies with detailed design
  - Accessible surface required
  - Understanding of the possible contamination of the surface
  - The strategy to be adopted for the approach to the surface

- ESA Technology activities to support Phootprint and further Mars exploration towards a sample return mission, including :
  - On-going development of a High Thrust Apogee Engine
  - Phootprint landing gear to TRL 5
  - Sample acquisition means for the Phootprint lander

This document and its content is the property of Astrium [Ltd/SAS/GmbH] and is strictly confidential. It shall not be communicated to any third party without the written consent of Astrium [Ltd/SAS/GmbH].

Thank You
Any Questions ?

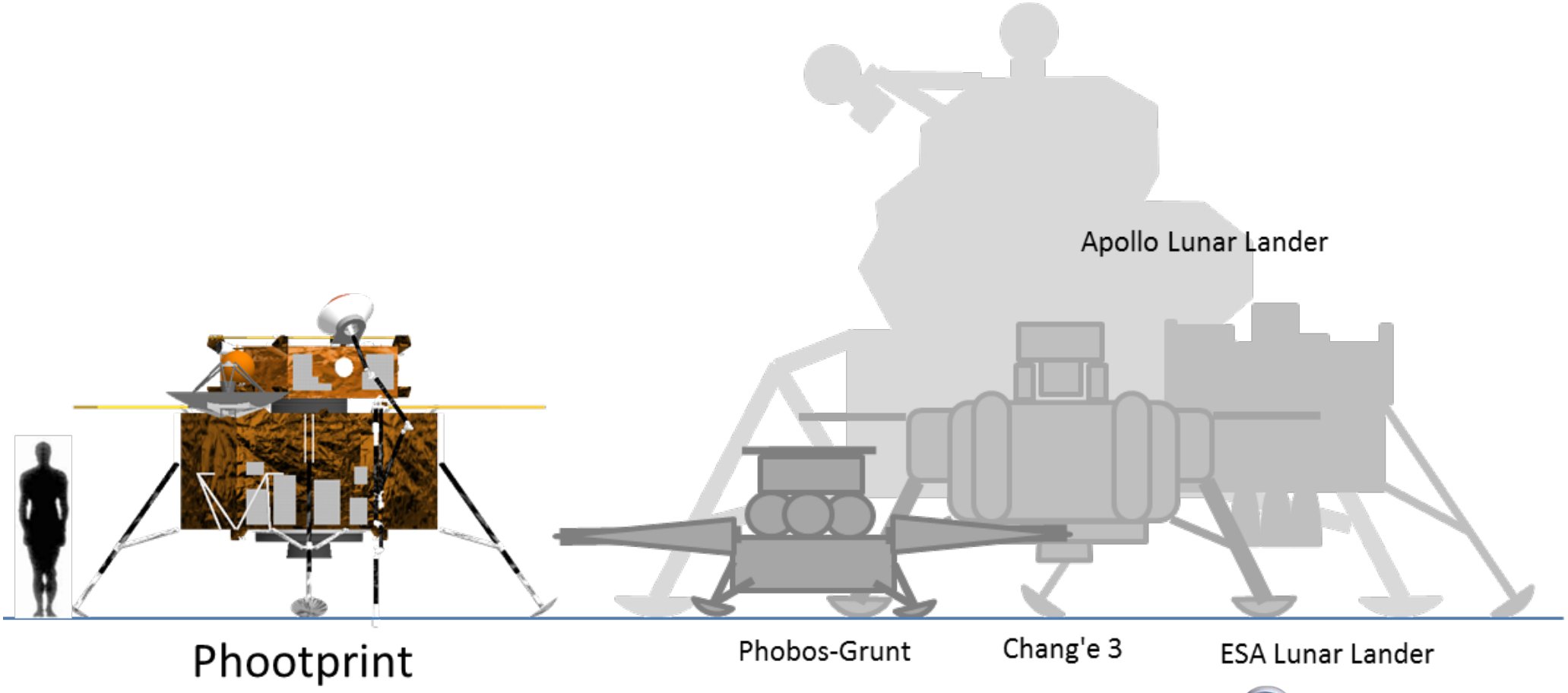

AIRBUS DEFENCE & SPACE